Large Acceptance Proton Form Factor Ratio Measurements at 13 and 15 $(GeV/c)^2$ *Using Recoil Polarization Method*

In Hall A with 11 GeV beam; 99 listed collaborators from 27 Labs and Universities.

Spokespersons: C.F.Perdrisat, L.Pentchev, E.Cisbani, V.Punjabi, B.Wojtsekhowski

College of William and Mary; INFN; Norfolk State University; Thomas Jefferson National Accelerator Facility; Christopher Newport University; DAPNIA; Florida International University; Institut for High Energy Physics, Protvino; Laboratory for High Energy, JINR, Dubna; University of Virginia; University of Glasgow; Massachusetts Institute of Technology; Budker Institute; Carnegie Mellon University; Old Dominion University; Universit Blaise Pascal; Tel Aviv University; Harvard University; Kharkov Institute of Physics and Technology; University of New Hampshire; North Carolina Central University; Saint Mary's University; University of Regina; Smith College; University of Chemical Technology, Sofia; Cal State University; Yerevan Physics Institute

Outline

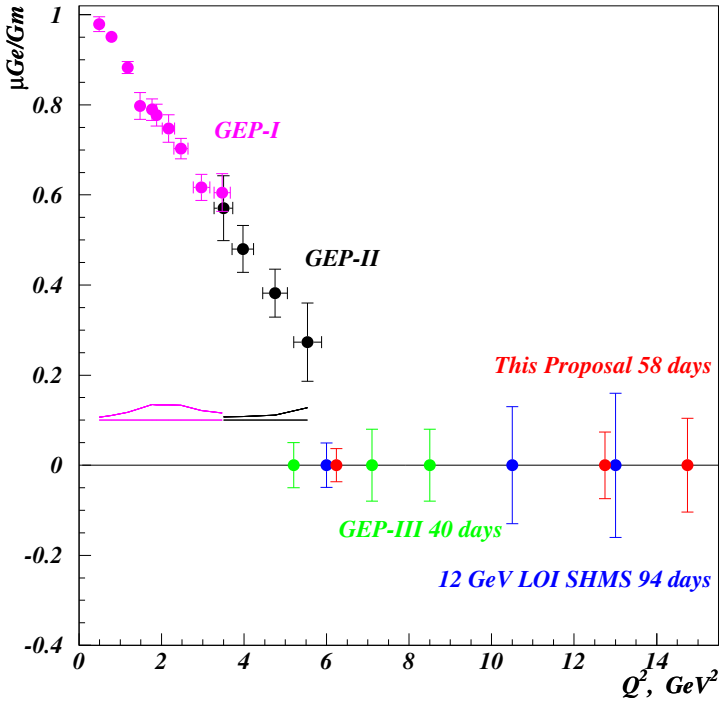

- Motivations
- Challenges of High Q^2 Measurements ($12\ GeV$ era)
  - Analyzing Power
- Proposed Setup
  Open Proton Spectrometer & E.M. Calorimeter identify ep elastic at $\mathcal{L}= 7\ 10^{38}$
  - Detector Requirements and Description
  - Trigger
  - Data Analyses
- Beam time request
- Summary

Motivations

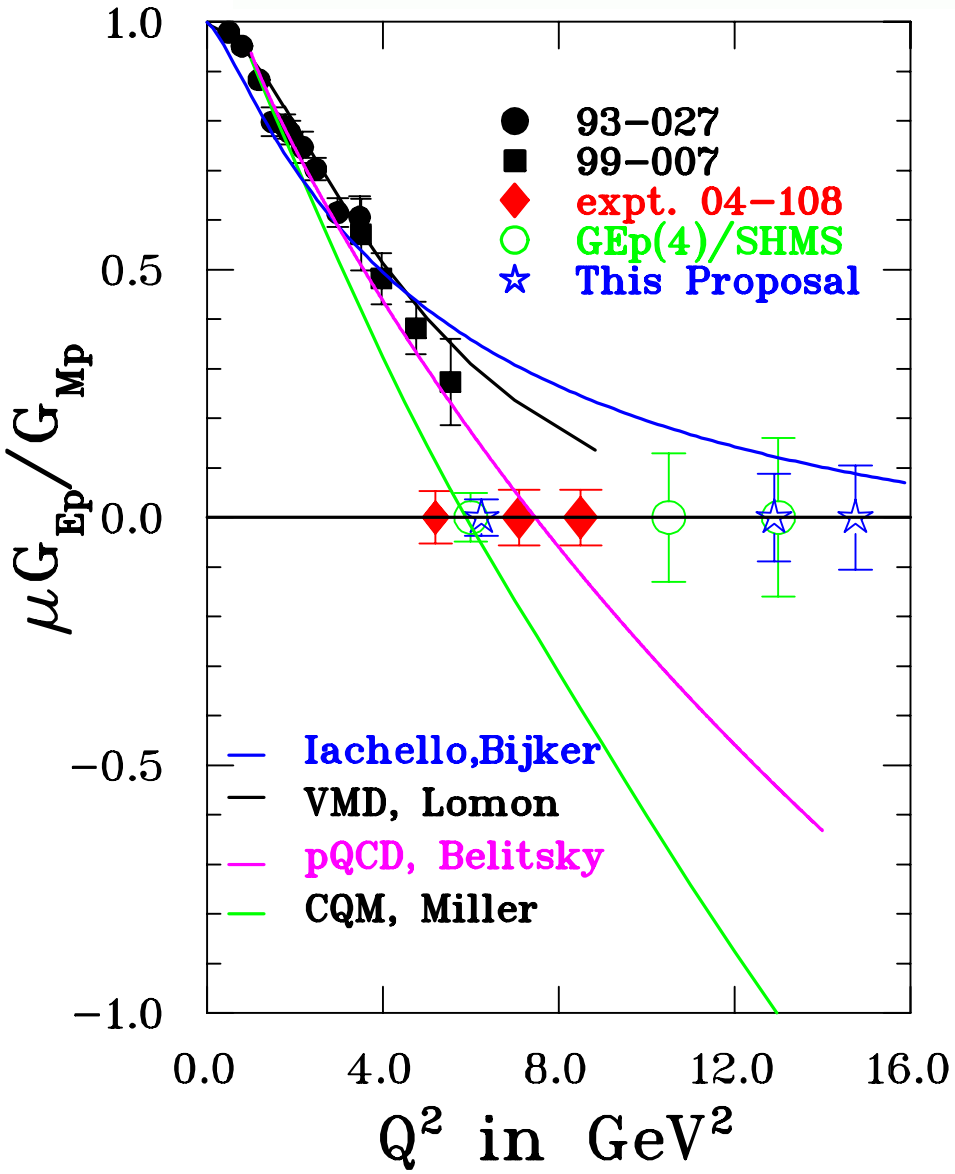

- Definitive test for many phenomenological models aiming to explain the G_{Ep}/G_{Mp} slope
- Investigate non-perturbative → perturbative QCD region
- Set limit or observe pQCD asymptotic
- Most likely will investigate negative G_{Ep} region

Challenges of High Q^2 Measurements

- Low elastic cross-section, $d\sigma/d\Omega_e^{Lab} \sim E^2/Q^{12}$
- Low analyzing power, $A_y \sim 1/P_{Lab} \sim 1/Q^2$

$\Rightarrow$ The overall experimental $FOM \sim d\sigma/d\Omega_e^{Lab} A_y^2 \sim E^2/Q^{16}$

$FOM|_{14GeV^2} = \frac{1}{15} FOM|_{GEP-III}$ for given solid angle

- Large proton momentum, $P_{Lab} \sim Q^2$
- Non-dispersive (reaction plane) precession angles, $\chi \sim \gamma_p \sim Q^2$, need to be controlled

$$\frac{P_t}{P_\ell} = \frac{P_t^{spec}}{P_n^{spec}} \sin\chi_\theta + \gamma_p(\mu_p - 1)\Delta\phi$$

$$\mu_p \frac{G_E}{G_M} = -\mu_p \frac{E_e + E'_e}{2m_p} \tan\frac{\theta_e}{2} \left(\frac{P_t^{spec}}{P_n^{spec}} \sin\chi_\theta + \gamma_p(\mu_p - 1)\Delta\phi \right)$$

Analyzing Power

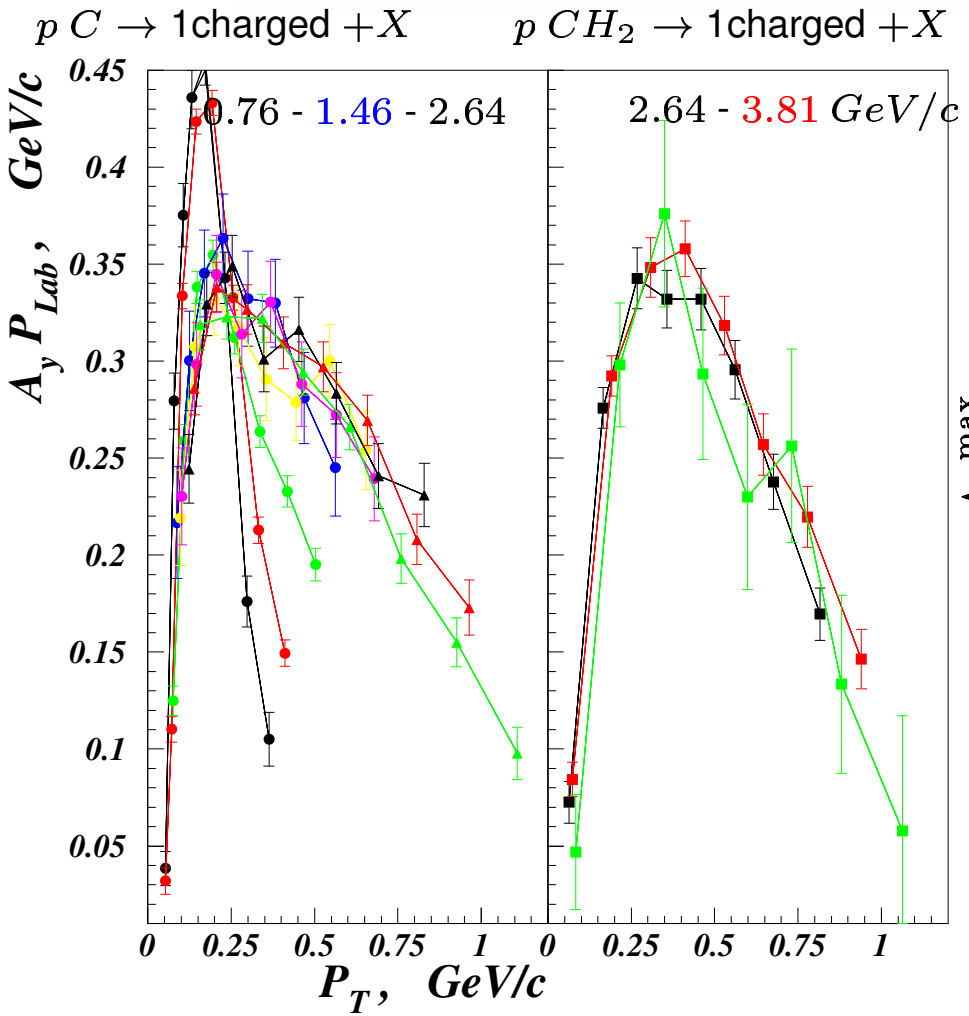

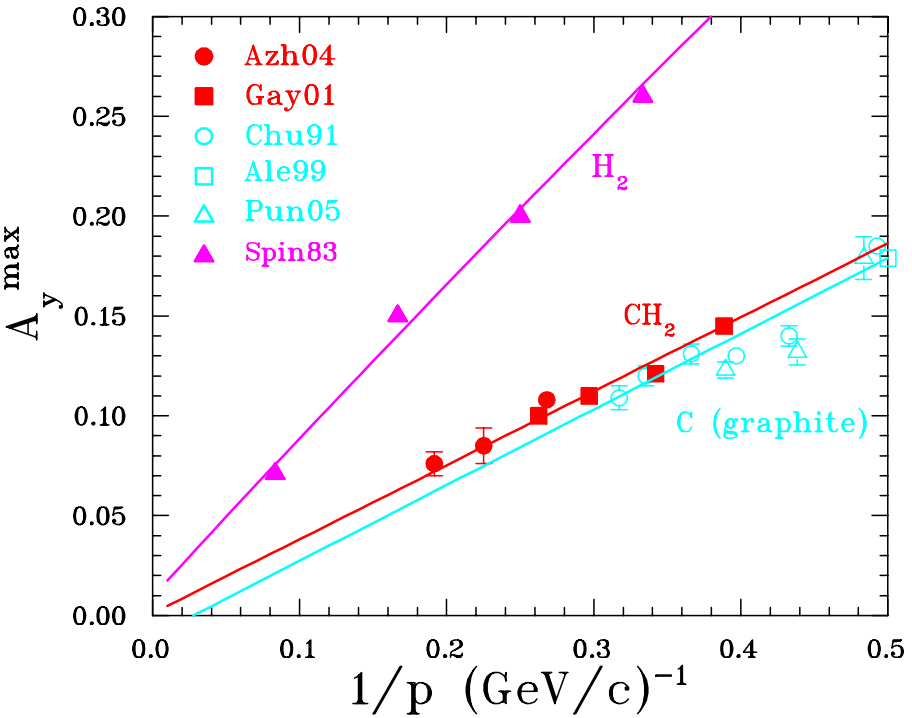

$\Rightarrow A_{eff} = \int A_y dP_T \sim 1/P_{Lab}$ for $1.5 < P_{Lab} < 5.3\ GeV/c$ (PRL L.S. Azhgirei 2005)

- In addition we plan to check A_y up to $\sim 8\ GeV/c$ at Dubna accelerator

Proposed Setup

"Classical" Measurements

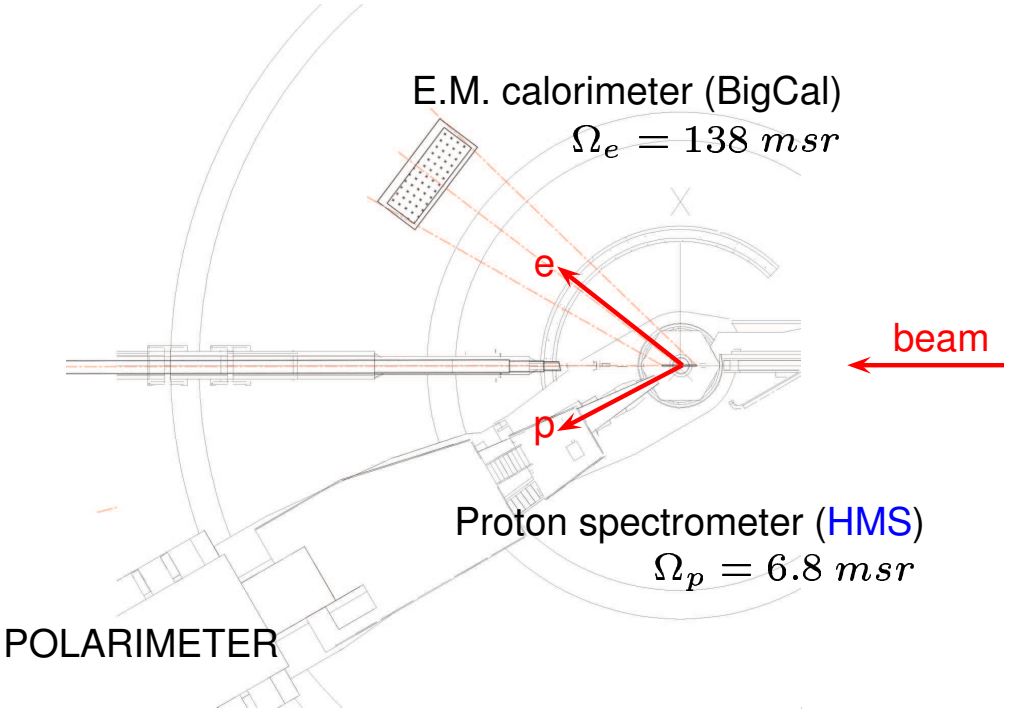

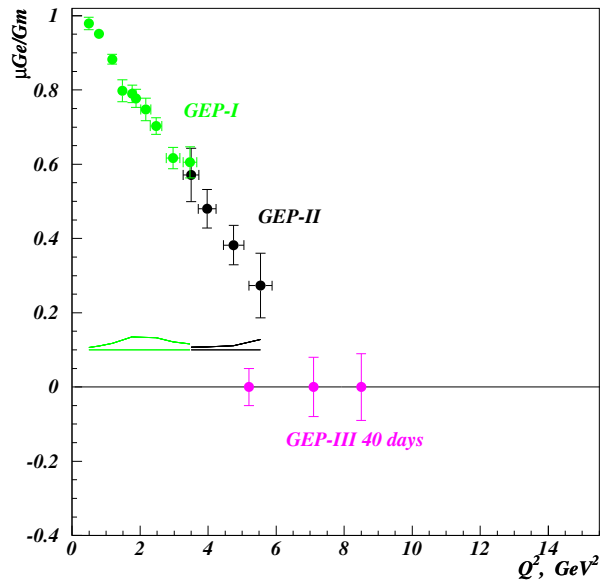

- E.M. Calorimeter: $\sim 5\%/\sqrt{E}$ energy resolution, $\sim 2\ mrad$ angular resolution at $3.5\ m$
- "Classical" Spectrometer (HMS) measures p_ℓ, reduces the rates at the polarimeter, identifies elastic protons, but limits the acceptance

Trade High-resolution Low-acceptance spectrometer $\rightarrow$ Low-resolution High-acceptance one

Proposed Setup

"Novel" Measurement

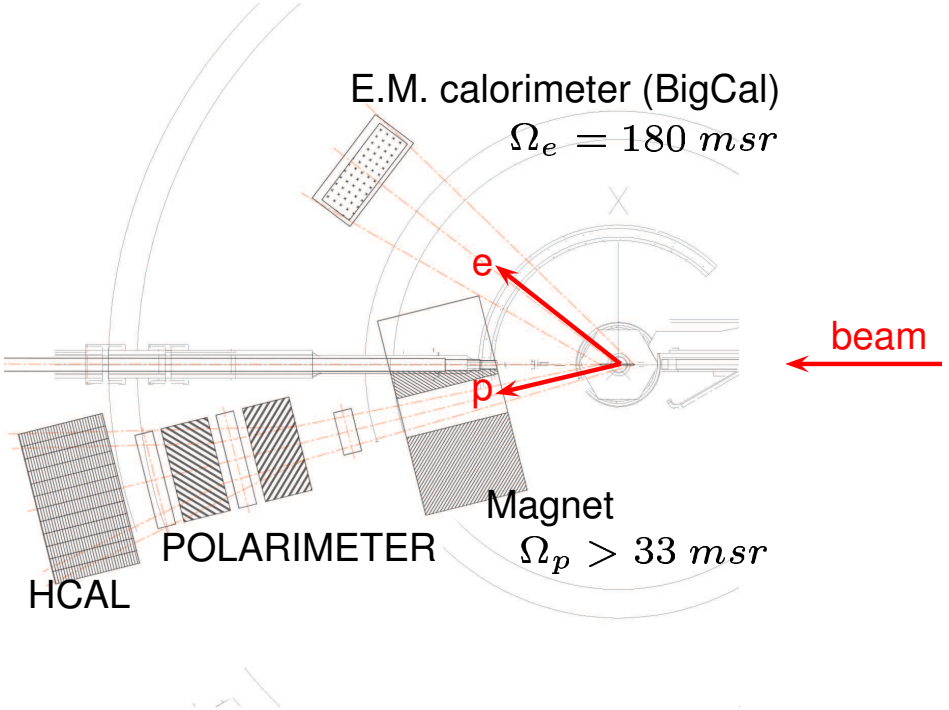

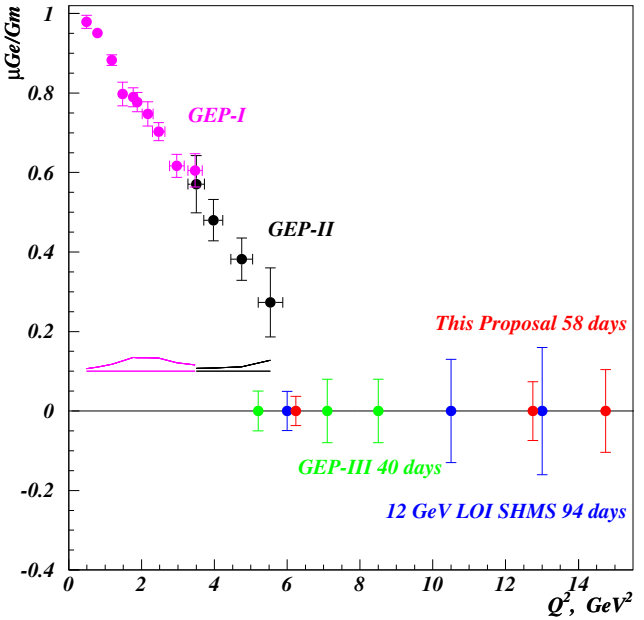

- E.M. Calorimeter: $\sim 5\%/\sqrt{E}$ energy resolution, $\sim 2\ mrad$ angular resolution at $3.5\ m$
- "Classical" Spectrometer (HMS) measures p_ℓ, reduces the rates at the polarimeter, identifies elastic protons, but limits the acceptance

Trade High-resolution Low-acceptance spectrometer $\rightarrow$ Low-resolution High-acceptance one

Proposed Setup

"Novel" Measurement

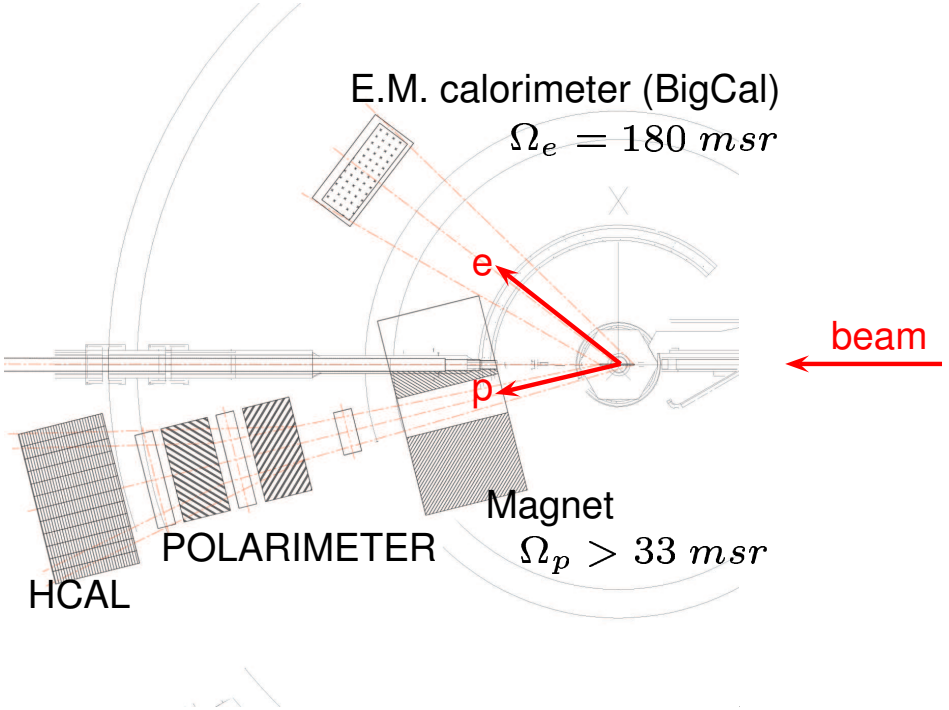

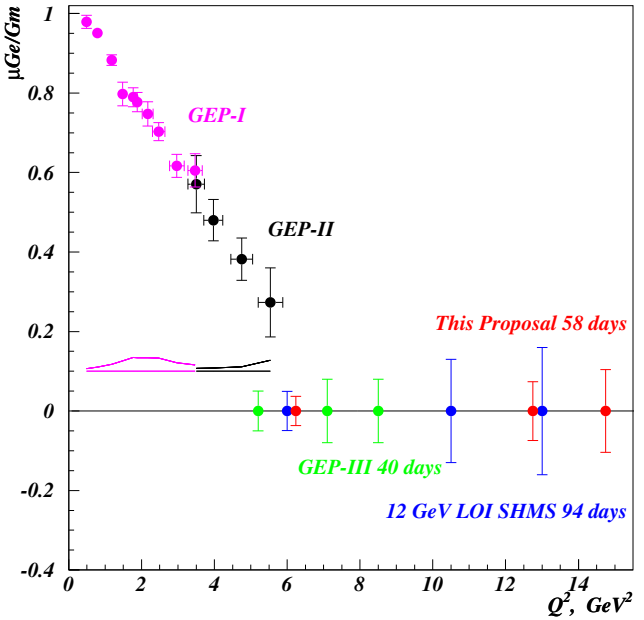

- Magnet: views $40\ cm$ target, field integral $\sim 3\ Tm$, bends vertically $6^0 \rightarrow$ optimum precession angle of $\sim 90^0$, small non-dispersive deflection
- Front tracking: high counting rates, $0.2\ mrad$ angular resolution; 0.5% momentum resolution
- Rear tracking: medium counting rates, $3\ mrad$ angular resolution, A_y^{max} at rescattering angle of $\sim 50\ mrad$
- Hadron Calorimeter: allows high energy threshold for the trigger, $E_{thresh} \sim 4\ GeV$

Front: Thin Gas Electron Multiplier (GEM) chamber

- Very fast: $\sim 100\ MHz/cm^2$; we need $\sim 100\,kHz/cm^2$
- High coordinate resolution $\sim 60 - 70\mu m$
- Only $50 - 200\ mg/cm^2$ $(0.15 - 0.7\% X_0)$ material, reduced sensitivity to γ background (10^{-3} efficiency)
- Three chambers in a row, each x,y,u, to reduce the noise and photon random hits
- Stable operation; cascading for higher gains

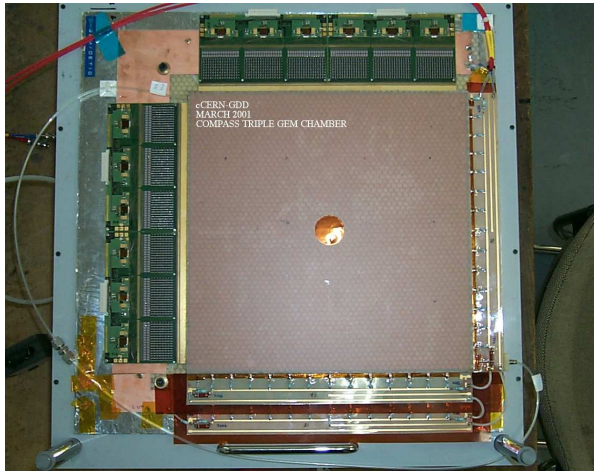

COMPASS Triple-GEM $31x31\ cm^2$

Rear: Thick GEM chambers

- Similar to GEM high rates
- Sufficient coordinate resolution $\sim 330\mu m$
- 5-10x more material
- Lower production cost, larger sizes

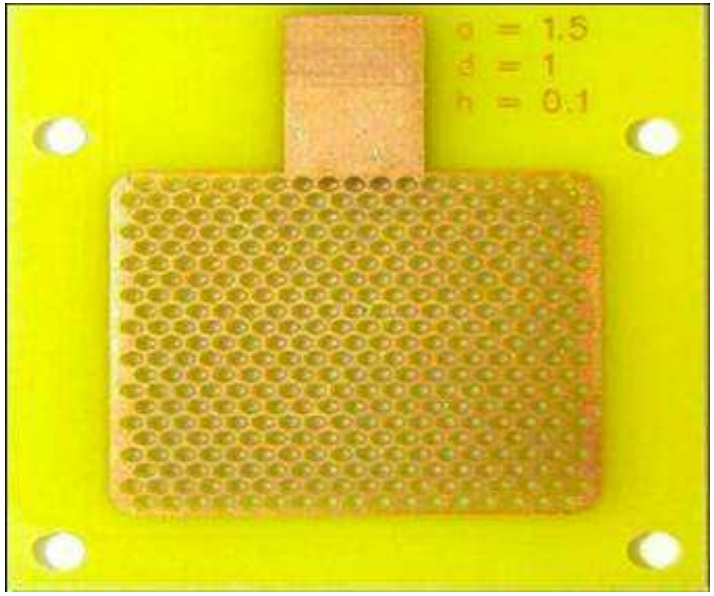

(A.Breskin et al.)

Hadron Calorimeter

- Array of 11×22 modules ($15 \times 15\ cm$ frontal area

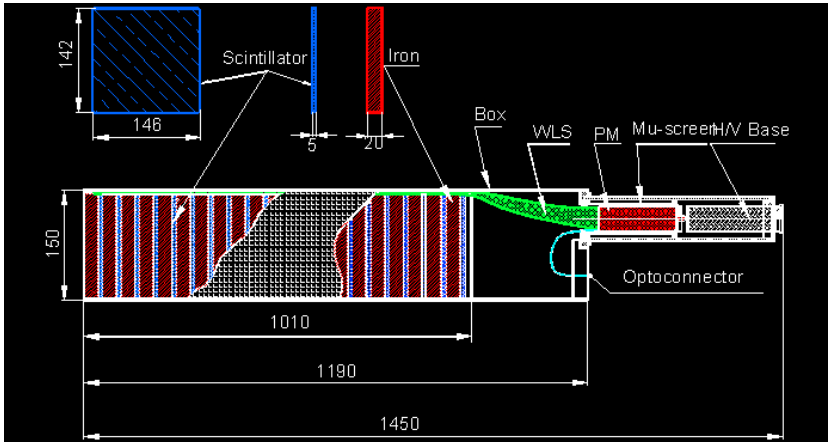

- Needed for the trigger: $\sim 60\%/\sqrt{(E)}$ energy resolution
- Helps resolving multi tracks: $\sim 15\ mm$ coordinate resolution

Data Analyzes: Tracking

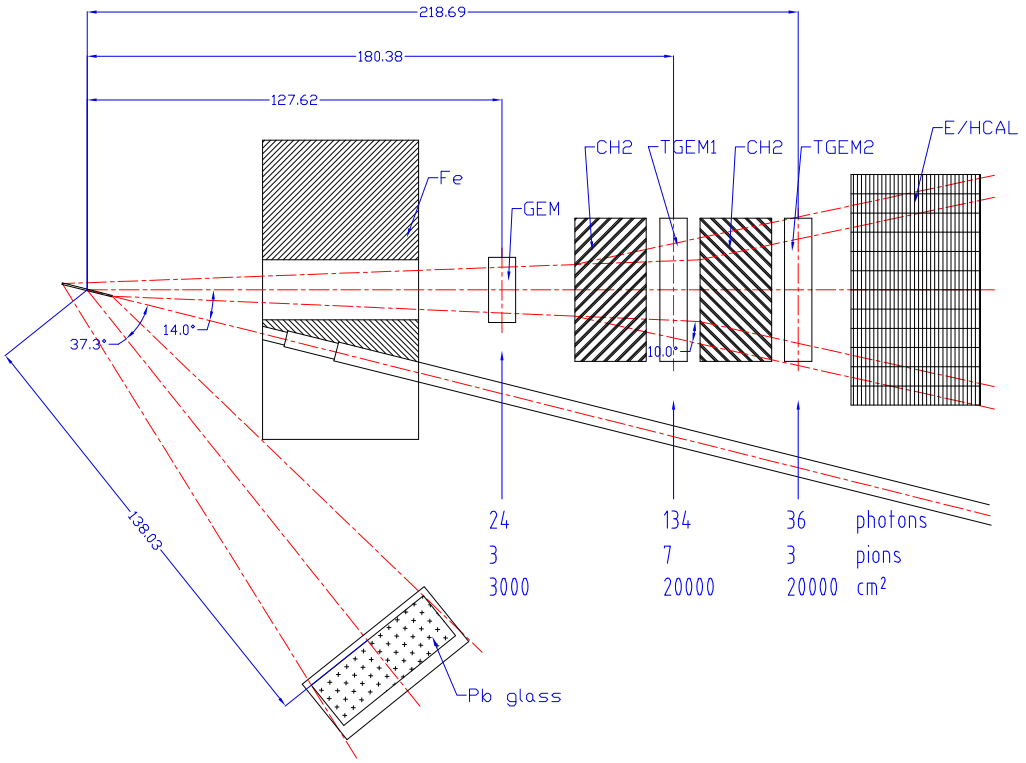

Random hits/tracks per event for the whole chamber

Data Analyzes: Tracking

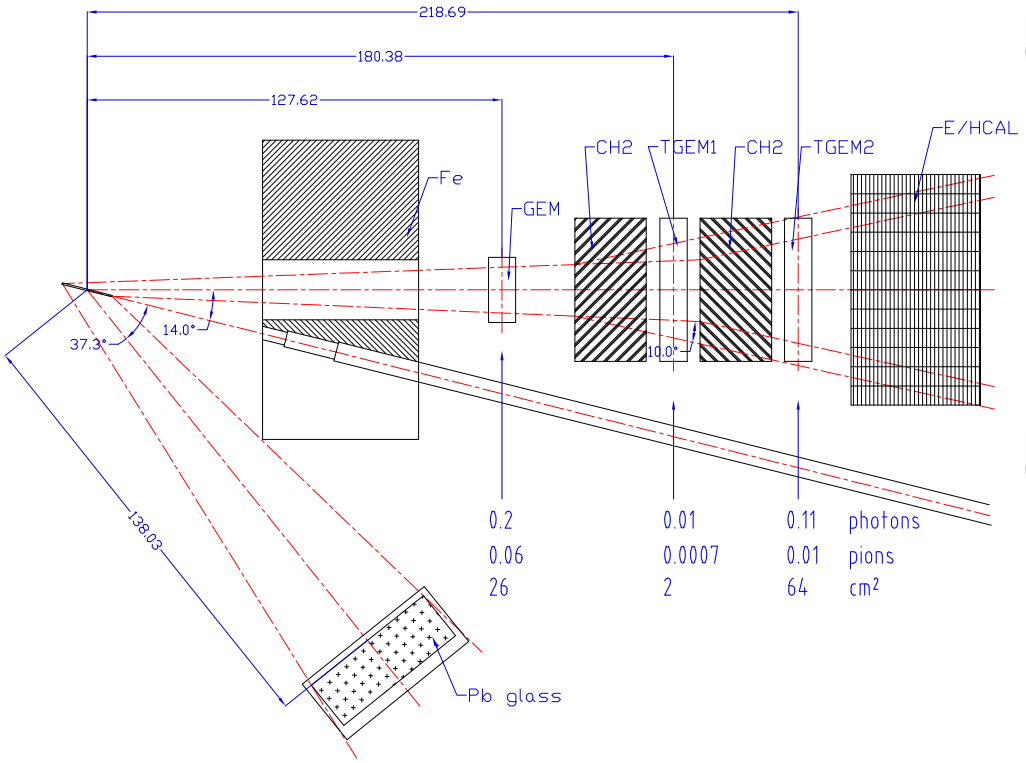

- Front GEM: Applying elastic kinematical cuts using E.M. calorimeter
  - Photon hits uncorrelated on the three chambers in each tracker
  - Remaining pion tracks eliminated kinematically
- Rear GEM: Identifying high energy hadron hit in the calorimeter
  - Remaining pion tracks are negligible

Random hits/tracks per event for the area of interest

Data Analyzes: Inelastic Background

The features of the proposed set-up:

- Proton arm:
  - Momentum resolution $\Delta p/p \approx 0.5\%$
  - Proton angle resolution $\Delta\theta_p \approx 0.1\ mrad$
- Electron arm:
  - Energy resolution $5\%/\sqrt{(E)}$
  - Electron angle resolution $\Delta\theta_e \approx 2\ mrad$

Allows to eliminate most of the background.

The main contribution to the background comes from

$$\gamma p \to \pi^0 p$$

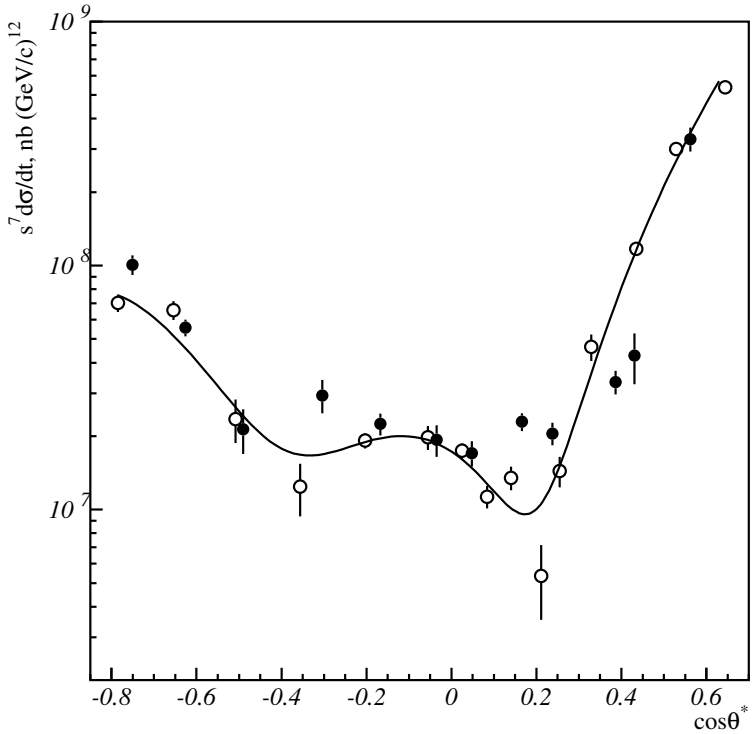

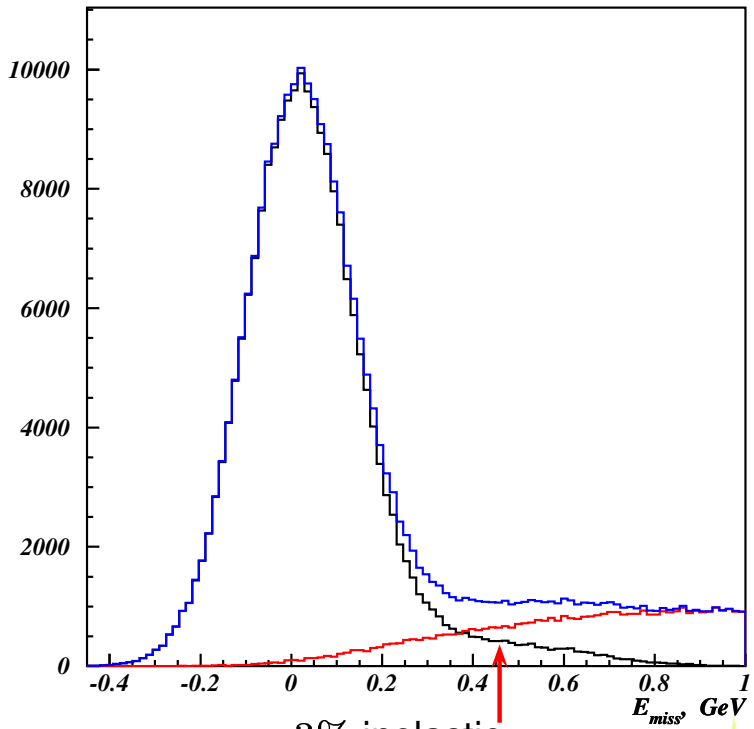

$\sim 3\%$ inelastic

Proposed measurements

Q^2 GeV^2	E_e GeV	θ_e deg	$E_{e'}$ GeV	θ_p deg	p_p GeV/c	rate Hz	ϵA_y^2 FOM
6.24	4.4	70.11	1.08	14.1	4.16	117	3.61×10^{-3}
12.90	11.	30.92	4.13	15.9	7.75	4.19	1.04×10^{-3}
14.75	11.	38.14	3.14	12.8	8.75	4.25	0.82×10^{-3}

Q^2 GeV^2	beam time days	$\Delta\,[\mu G_{Ep}/G_{Mp}]$ stat.
6.24	2	0.037
12.90	for both	0.088
14.75	56	0.105

Summary

- We request 60 days to measure $\mu G_{Ep}/G_{Mp}$ at $Q^2 = 12.9$ and $14.8\ GeV^2$ through a measurement of the polarization transfer in the elastic reaction $H(\vec{e}, e'\vec{p})$ to to an absolute statistical accuracy ~ 0.1
- This experiment will be done in Hall A, and will utilize BigCal to detect electrons scattered off a $40\ cm$ cryogenic target, and a customized setup for detecting the recoil proton which will include a dipole magnet, three new fast trackers for the determination of its momentum, interaction vertex and polarization, as well as a hadron calorimeter to control the trigger rate
- Knowledge of the proton form factors is crucial for the understanding of the structure of the nucleon. Form factor data are required for tests of QCD

Systematics due to Spin Precession

Dispersive precession $\chi_\theta = \gamma(\mu_g - 1)\Delta\theta$

Non-dispersive precession $\chi_\phi = \gamma(\mu_g - 1)\Delta\phi$

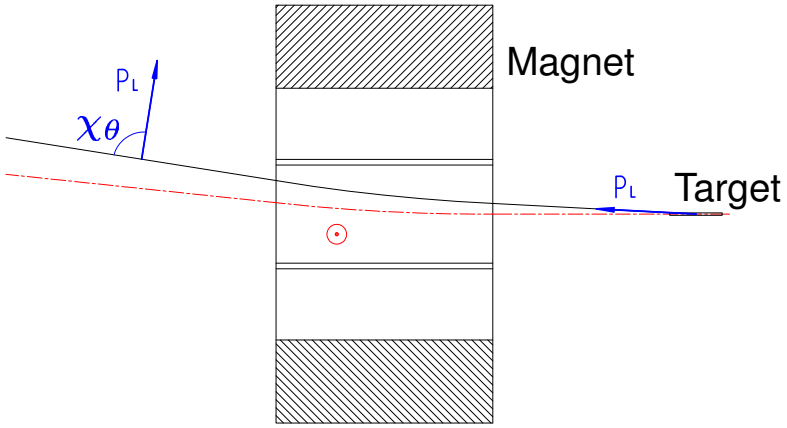

$\perp$ to Reaction Plane

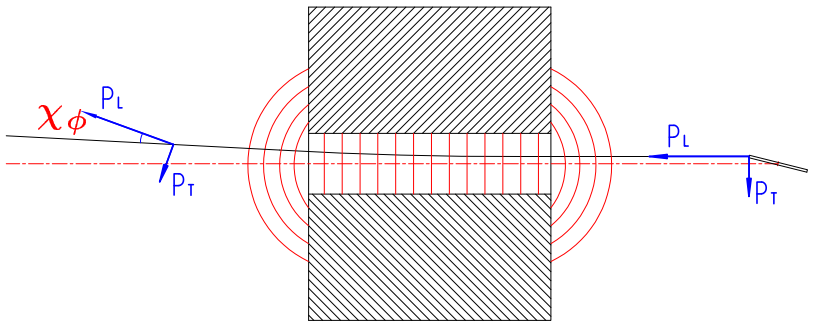

Reaction Plane

$$\mu\frac{G_E}{G_M} = -\mu\frac{P_t^{targ}}{P_\ell^{targ}}\frac{(E_e+E_e')}{2m_p}\tan(\frac{\theta_e}{2})$$

$$\frac{P_t^{targ}}{P_\ell^{targ}} = \frac{P_t^{spec}}{P_n^{spec}}\sin\chi_\theta + \gamma(\mu_g - 1)\Delta\phi \qquad \sim 100$$

$$\mu\frac{G_E}{G_M} = -\mu\frac{(E_e+E_e')}{2m_p}\tan(\frac{\theta_e}{2})\frac{P_t^{spec}}{P_n^{spec}}\sin\chi_\theta - \mu\frac{(E_e+E_e')}{2m_p}\tan(\frac{\theta_e}{2})\gamma(\mu_g - 1)\Delta\phi$$

For non-disp. deflection uncertainty of $1\ mrad \Rightarrow 0.10$ absolute error to $\mu\frac{G_E}{G_M}$

Evolution of Polarization Transfer Measurements

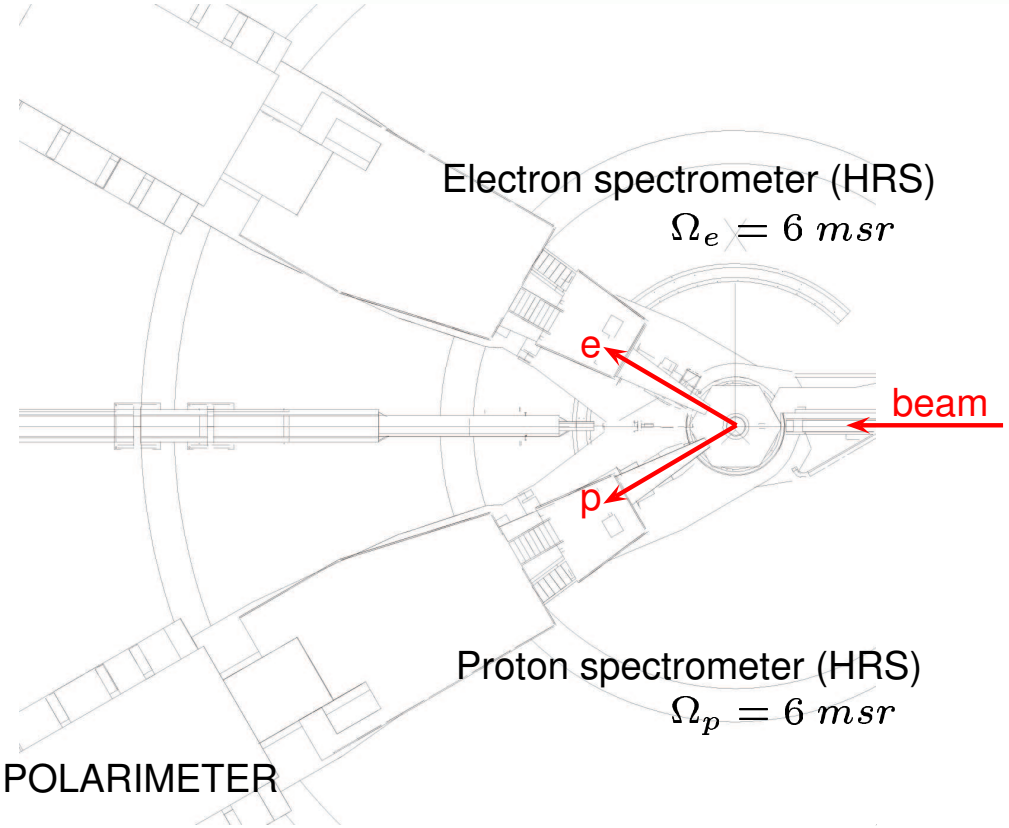

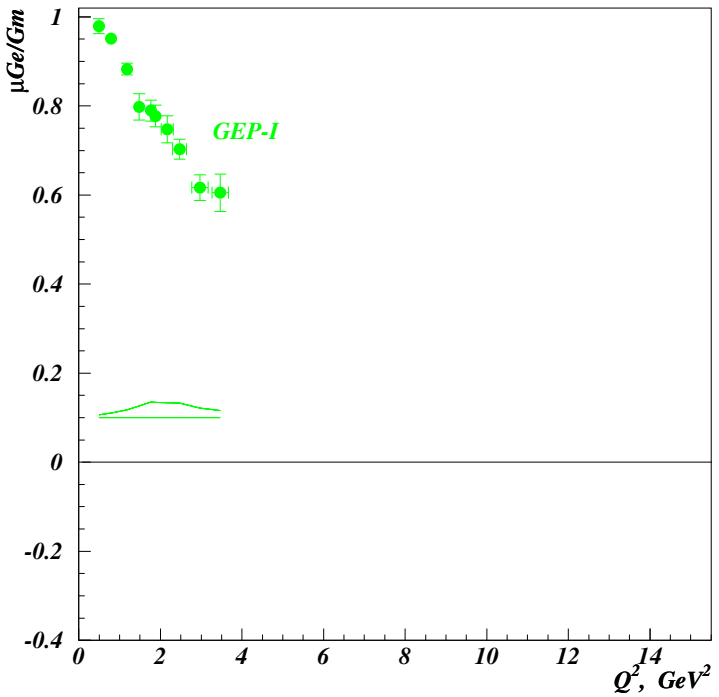

Required electron acceptance $\Omega_e = Jac \bullet \Omega_p \sim Q^2$ at fixed beam energy E

Evolution of Polarization Transfer Measurements

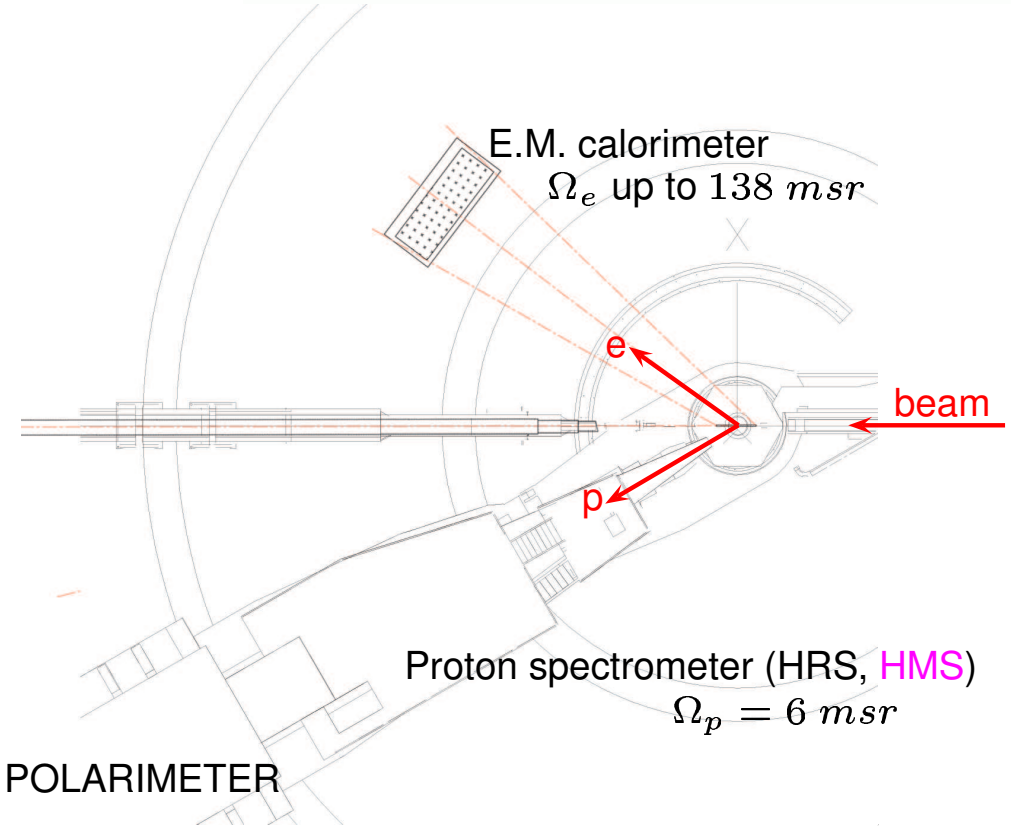

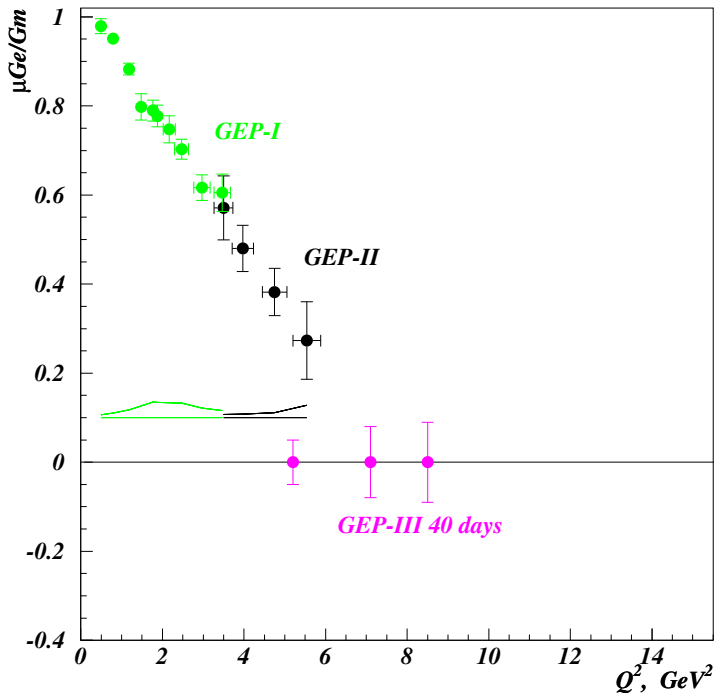

Required electron acceptance $\Omega_e = Jac \bullet \Omega_p \sim Q^2$ at fixed beam energy E