JLab
Hall A General Operations Manual

Info Level 4

Hall A Arms and Beamline Transport

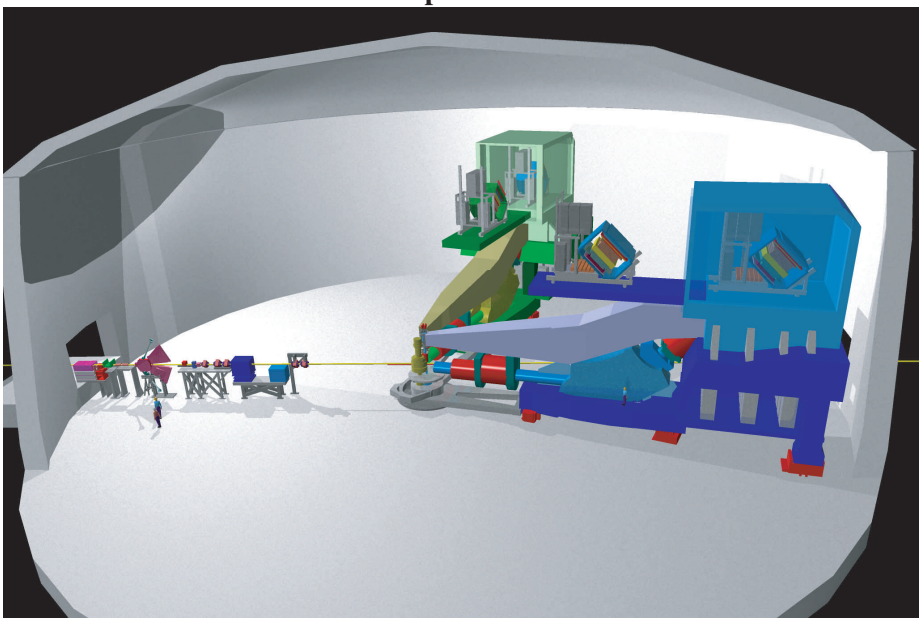

m-drive/martz//graphics/3dart/halla/newfolder/hallacombo.ai jm 7/26/00

The Hall A Collaboration

Editor: E. A. Chudakov[1]

February 27, 2011

[1]Thomas Jefferson National Accelerator Facility

Contents

I Hall A OSP Overview **21**

1 Introduction **22**
1.1 About this Document . . . 22
1.2 Purpose . . . 23
1.3 Hall A Overview . . . 24

2 Hall A Safety Assessment Overview **25**
2.1 Overview of the Hazards . . . 25
2.2 Radiation Hazard . . . 26
2.3 Fire Hazard . . . 26
2.4 Electrical Hazard . . . 27
2.5 Mechanical Hazard . . . 28
2.6 Hazard from Strong Magnetic Fields . . . 29
2.7 Cryogenic and Oxygen Deficiency Hazard (ODH) . . . 30
2.8 Vacuum and High Pressure Hazards . . . 31
2.9 Toxic Materials Hazard . . . 32

3 Hall A Access and Safety **34**
3.1 The Personnel Safety System . . . 34
3.1.1 Restricted Access . . . 34
3.1.2 Sweep . . . 34
3.1.3 Controlled Access . . . 35
3.1.4 RF Power Permit . . . 35
3.1.5 Beam Permit . . . 36
3.1.6 Run Safe Boxes . . . 36
3.2 Hall A Access . . . 36
3.2.1 Access Requirements . . . 37
3.2.2 Controlled Access Procedure . . . 38
3.2.3 Restricted Access Procedure . . . 39
3.2.4 The Hall A Safety Walk-through . . . 39
3.2.5 Radiation Safety . . . 39

II Beamline **43**

4 General Description **44**
4.1 Introduction . . . 44
4.2 Beam Line Components . . . 44
4.2.1 The Beam Entrance Channel . . . 48
4.2.2 The Beam Optics Channel . . . 48
4.2.3 Beam Diagnostic Elements . . . 51
4.2.4 Beam Exit Channel . . . 51
4.3 Machine/Beamline protection system . . . 51
4.4 Safety Assessment . . . 52
4.5 Authorized Personnel . . . 52
4.6 Beam Position Monitors . . . 53
4.6.1 Authorized Personnel . . . 53
4.7 Beam Current Measurement . . . 55
4.7.1 System Layout . . . 55
4.7.2 Authorized Personnel . . . 57
4.8 Fast Raster . . . 58
4.9 Bremsstrahlung Radiator . . . 59
4.9.1 Overview . . . 59
4.9.2 Safety Issues . . . 59
4.9.3 Operations . . . 59
4.9.4 Special Instructions . . . 61
4.9.5 Authorized Personnel . . . 61

5 Arc Energy Measurement **62**
5.1 Summary of ARC operations . . . 62
5.2 Summary of field integral . . . 63
5.3 Details on integral run . . . 64
5.4 Details on temperatures . . . 65
5.5 Shed access and safety . . . 66
5.6 List of Authorized Personnel for Shed Access . . . 66

6 eP Beam Energy Measurement **68**
6.1 Purpose and Layout . . . 68
6.2 Description of Components . . . 68
6.2.1 High Voltage . . . 68
6.2.2 MEDM Controls . . . 70
6.2.3 Silicon Micro-Strip Detectors . . . 73
6.2.4 Target . . . 73
6.2.5 Cherenkov . . . 74
6.2.6 Data Acquisition . . . 75
6.2.6.1 Trigger-configuration . . . 75

6.2.6.2 Rebooting Acquisition-VME . . . 76
6.2.6.3 Running CODA . . . 77
6.2.7 Data Analysis . . . 78
6.3 Operating Procedure . . . 80
6.4 Maintenance . . . 83
6.5 Safety Assessment . . . 84
6.5.1 High Voltage . . . 84
6.5.2 Silicon Micro-Strip Detectors . . . 84
6.5.3 Target . . . 85
6.5.4 Cherenkov . . . 85
6.6 Authorized Personnel . . . 85

7 Target Chamber **87**
7.1 Target Chamber - Spectrometer Coupling . . . 88
7.2 Stress Analysis of the Middle Ring . . . 89
7.3 Vacuum Pumping System . . . 90
7.4 Safety Assessment . . . 90
7.5 Authorized Personnel . . . 90

8 Møller Polarimeter **92**
8.1 Purpose and Layout . . . 92
8.2 Principles of Operation . . . 93
8.3 Description of Components . . . 94
8.3.1 MEDM Control . . . 94
8.3.2 Polarized Electron Target . . . 94
8.3.3 Spectrometer Description . . . 98
8.3.4 Detector . . . 99
8.3.5 Electronics . . . 100
8.3.6 DAQ . . . 100
8.3.7 Slow Control . . . 100
8.4 Operating Procedure . . . 102
8.4.1 Initialization . . . 104
8.4.2 Initial Beam Tune . . . 105
8.4.3 The Magnet Settings . . . 106
8.4.4 Final Beam Tune . . . 106
8.4.5 Target Motion . . . 106
8.4.6 Detector Tuning and Checking . . . 107
8.4.7 Polarization Measurement . . . 107
8.5 Safety Assessment . . . 108
8.5.1 Magnets . . . 108
8.5.2 Vacuum System . . . 108

8.5.3 High Voltage . . . 108
8.5.4 Target . . . 108
8.6 Authorized Personnel . . . 109

9 Compton Polarimeter 110
9.1 Introduction . . . 110
9.2 Principle of Operation . . . 110
9.3 Description of Components . . . 112
9.3.1 Optics table . . . 112
9.3.2 Magnetic Chicane . . . 113
9.3.3 Photon Detector . . . 116
9.3.4 Electron detector . . . 116
9.3.5 Fast acquisition system . . . 117
9.4 Operating Procedure . . . 117
9.4.1 DAQ Setup . . . 118
9.4.2 Cavity Setup . . . 127
9.4.3 Electron Detector Setup . . . 134
9.4.4 Vertican Scan . . . 136
9.4.5 Taking data . . . 137
9.4.6 Turning off the compton polarimeter . . . 141
9.5 Safety Assessment . . . 142
9.5.1 Magnets . . . 142
9.5.2 Laser . . . 142
9.5.3 High Voltage . . . 143
9.5.4 Authorized Personnel . . . 143

III Targets 144

10 Overview 145

11 Cryogenic Targets 146
11.1 Procedure for Normal Running of the Hall A Cryogenic Targets . . . 146
11.1.1 Introduction . . . 146
11.1.2 Alarm Handler . . . 147
11.1.3 Target Motion and Fast Raster . . . 147
11.1.4 Cryogenic Consumption . . . 148
11.1.5 Checklist . . . 148
11.1.6 Target Operators . . . 148
11.2 Target Experts . . . 149
11.3 Safety Assessment . . . 150
11.3.1 Flammable Gas . . . 150
11.3.1.1 Electrical Installation . . . 151
11.3.1.2 Flammable Gas Detectors . . . 153

11.3.2 Pressure . . . 153
11.3.2.1 Target Cells . . . 153
11.3.2.2 Pressure Relief . . . 154
11.3.2.3 Scattering Chamber Vacuum Failure . . . 154
11.3.3 Temperature Regulation . . . 157
11.3.3.1 Target Freezing . . . 158
11.3.4 ODH . . . 159
11.3.5 Controls . . . 159
11.3.6 Authorized Personnel . . . 160
11.4 Cryogenic Target Control System User Manual . . . 160

12 Polarized ^{3}He Target 161
12.1 General Description . . . 161
12.1.1 Physics Principle . . . 161
12.1.2 Apparatus . . . 161
12.1.3 Control System . . . 163
12.2 Operation Overview . . . 164
12.3 Laser System . . . 165
12.3.1 Laser Room & Beam Path . . . 165
12.3.2 Diode Lasers & Controls . . . 166
12.3.3 Alignment . . . 168
12.3.4 Operation I: Local Mode . . . 172
12.3.5 Operation II: Remote Mode . . . 172
12.4 Target Cell . . . 173
12.4.1 Description . . . 173
12.4.2 Installation & Replacement . . . 173
12.5 Target Ladder & Motion System . . . 175
12.5.1 Description . . . 175
12.5.2 Operation . . . 176
12.6 Target Enclosure & Windows . . . 177
12.7 Target Cell Heater . . . 177
12.7.1 Description . . . 178
12.7.2 Safety Considerations . . . 180
12.7.3 Operation . . . 181
12.7.3.1 Local Operation . . . 181
12.7.3.2 Remote Operation . . . 183
12.8 Helmholtz Coils . . . 186
12.9 NMR Polarimetry . . . 188
12.9.1 NMR polarization measurement . . . 188
12.9.2 Warnings . . . 190
12.9.3 NMR AFP Safety . . . 191
12.9.3.1 The DC current . . . 191
12.9.3.2 How to turn the Power Supplies OFF in an emergency? 191

12.9.3.3 The AC current . . . 194
12.9.3.4 How to turn the RF Power Amplifier OFF in an emergency? 194
12.10 EPR Polarimetry . . . 194
12.10.1 EPR Lineshape Measurement – Frequency Modulation Sweep: . . . 194
12.10.2 Common Problems . . . 197
12.10.3 EPR Polarization Measurement – AFP Sweep . . . 197
12.10.4 Common Problems . . . 198
12.11 Reference Cell . . . 199
12.11.1 Description of the Reference Cell System . . . 199
12.11.2 Operation . . . 201
12.11.3 Cautions . . . 203
12.11.4 Potential Hazards . . . 203
12.11.5 Hazard Mitigation . . . 203
12.12 Hazards and Safety Issues . . . 203
12.13 Laser Safety . . . 204
12.13.1 Laser Safety . . . 204
12.13.2 Fire Hazards and Safety . . . 204
12.13.3 Personnel Safety/ Working in the Hall . . . 204
12.14 Appendix: Laser Standard Operation Procedure . . . 205
12.14.1 Introduction . . . 205
12.14.2 Personnel and Required Training . . . 205
12.14.3 Laser . . . 206
12.14.4 Optical setup . . . 206
12.14.5 Hazards . . . 209
12.14.6 Laser environment . . . 209
12.14.7 Procedures . . . 211
12.14.7.1 Normal procedure . . . 212
12.14.7.2 Alignment procedure . . . 212
12.14.7.3 Maintenance procedure . . . 213
12.14.7.4 Off-normal and emergency procedure . . . 213
12.14.8 Controls . . . 214
12.14.9 Laser safety calculations . . . 214
12.15 List of authorized personnel . . . 215

13 The Waterfall Target **219**
13.1 Overview . . . 219
13.2 Description of the System . . . 219
13.2.1 The Hydraulic System . . . 222
13.2.2 The Movement System . . . 227
13.2.3 The Slow–Control System . . . 227
13.3 The Target Cell Windows . . . 234
13.4 Target Layouts . . . 235
13.4.1 The Target for the Experiment E89-003 and E89-033 . . . 236

13.4.2 The Target for the Experiment E00-102 . . . 237
13.4.3 The Target for the Experiment 94-107 . . . 237
13.5 Operating Procedure . . . 237
13.5.1 Startup of the system . . . 238
13.5.1.1 First startup of the System . . . 238
13.5.2 System shutdown . . . 239
13.5.3 Troubleshooting . . . 239
13.6 Standard Operations . . . 240
13.6.1 Target Selection . . . 240
13.6.2 Pump Speed Control . . . 241
13.6.3 Rebooting the IOC . . . 241
13.7 Troubleshooting (Experts only) . . . 241
13.7.1 Manual motion operation (Experts only) . . . 241
13.7.2 Use of the HOME routine . . . 243
13.7.3 Hardware limit over travel . . . 243
13.7.4 Manual water pump operation . . . 243
13.8 Safety Assessments . . . 244
13.8.1 Radiological hazards . . . 244
13.8.2 The electrical power and slow control systems . . . 244
13.8.3 The water system . . . 244
13.8.4 Thin windows on the target cell . . . 245
13.8.5 The slow control system . . . 245
13.8.6 The mechanical system . . . 245
13.9 Authorized Personnel . . . 246

IV Magnetic Spectrometers 247

14 Hall A Vacuum System 248
14.1 Overview . . . 248
14.2 HRS Vacuum System . . . 248
14.3 Target Vacuum System . . . 250
14.4 Magnet Vacuum System . . . 250
14.5 Beam Line Vacuum System . . . 250
14.6 Beam Exit Vacuum System . . . 251
14.7 Hazards of Vacuum Systems . . . 251
14.8 Authorized Personnel . . . 252

15 High Resolution Spectrometers (HRS) 253
15.1 Overview . . . 253
15.2 Safety with Regards to the Spectrometer . . . 258
15.2.1 Authorized Personnel . . . 259
15.3 The Magnets of HRS . . . 259
15.3.1 Magnets and Power Supplies . . . 260

15.3.2 Quadrupole Magnets . . . 260
15.3.3 Cryogenic Procedures . . . 261
15.3.4 First Time Startup Check List. . . . 261
15.3.5 Dipole Magnet . . . 261
15.3.6 **Septum Magnets** . . . 262
15.3.7 **Septum Vacuum System** . . . 262
15.3.8 **The Septum Beam Vacuum** . . . 262
15.3.9 **Septum Insulating Vacuum** . . . 263
15.3.10 **Septum Cryogenic Cooling Circuits** . . . 263
15.3.11 **Septum Electrical Circuit** . . . 266
15.3.12 **Septum Control System** . . . 268
15.3.13 **Septum Hazard Analysis and Control** . . . 270
15.3.14 **Septum Vacuum System Hazards** . . . 270
15.3.15 **Hazards Associated with the Cryogenic Cooling Circuits in Septum Magnets** . . . 271
15.3.16 **Hazards Associated with the Septum Electrical Circuit** . 273
15.3.17 **Septum Magnet Quench Hazard** . . . 273
15.3.18 **Hazards from Exposed High-current Contacts in the Septum Magnets** . . . 273
15.3.19 **Hazards of Static Magnetic Field from the Septum Magnets** 274
15.3.20 **Hazards of VCL Loss of Coolant in the Septum Magnets** 275
15.3.21 **Hazards Associated with the Septum Magnet Control System** . . . 275
15.3.22 **Hazard controls for the Septum Magnets** . . . 277
15.3.23 **Monitoring systems** . . . 279
15.4 Operation of the HRS Magnets . . . 280
15.4.1 Introduction . . . 280
15.4.2 Simple HRS Setting (Autopilot Mode) . . . 281
15.4.3 Powering Up Dipole Magnets: . . . 282
15.4.4 Starting Q1 Power Supply: . . . 282
15.4.5 Starting Q2/3 Power Supply: . . . 282
15.4.6 Starting a Septum Magnet . . . 283
15.5 Field Monitoring . . . 286
15.5.1 Dipole Field Monitoring Electron Arm . . . 286
15.5.2 NMR Operating Procedure . . . 287
15.5.3 Authorized Personnel . . . 293
15.6 Collimators and Sieve Slits . . . 294
15.6.1 Safety Assessment . . . 294
15.6.2 Operating Procedure . . . 297
15.6.3 Authorized Personnel . . . 297
15.7 Spectrometer Alignment . . . 298
15.7.1 Authorized Personnel . . . 299

V HRS Detectors 300

16 Overview 301
16.1 Overview of the Detector Package . . . 301
16.2 Geometry of the Detector Packages . . . 304

17 Vertical Drift Chambers 306
17.1 Overview . . . 306
17.2 Operating Procedure . . . 308
17.3 Handling Considerations . . . 311
17.4 Other Documentation . . . 312
17.5 Safety Assessment . . . 312
17.6 Authorized Personnel . . . 312

18 Trigger Scintillator Counters 313
18.1 Overview . . . 313
18.2 PMT regime and time resolution . . . 314
18.3 PMT operation monitoring . . . 315
18.4 Measures to Protect the PMTs from Helium . . . 317
18.5 2" PMT Bases for S1 Trigger Counters . . . 317
18.6 Safety Assessment . . . 319
18.7 Authorized Personnel . . . 320

19 Gas Cherenkov Counters 321
19.1 Concept of the design . . . 321
19.2 Safety Assessment . . . 323
19.3 Operating Procedure . . . 323
19.4 Responsible Personnel . . . 323

20 Electromagnetic Calorimeters 325
20.1 Purpose and Layout . . . 325
20.2 Description of Components . . . 326
20.2.1 Detectors . . . 326
20.2.2 Electronics . . . 329
20.3 Safety Assessment . . . 329
20.4 Authorized Personnel . . . 329

21 Aerogel Cherenkov Counter 330
21.1 Overview . . . 330
21.2 Mirror Aerogel Cherenkov Counter . . . 330
21.3 Operating Procedure . . . 333
21.4 Handling Considerations . . . 334
21.5 Diffusion aerogel counters . . . 335
21.6 Safety Assessment . . . 335

21.7 Authorized Personnel . . . 336

22 RICH **342**
22.1 Purpose and Layout . . . 342
22.2 Description of Components . . . 343
22.2.1 Gas System . . . 343
22.2.2 Freon System . . . 344
22.2.3 DAQ, Low- and High-Voltage Supplies . . . 344
22.3 Operating Procedure . . . 345
22.3.1 Installation . . . 345
22.3.2 De-Installation and Mechanical Work . . . 345
22.3.3 During Data-Taking . . . 345
22.3.3.1 EPICS Controls . . . 346
22.3.3.2 Normal Operation . . . 346
22.3.3.3 Radiator . . . 346
22.3.3.4 Condensor . . . 346
22.3.3.5 Gas system . . . 347
22.3.3.6 Power Supplies . . . 347
22.3.3.7 Fluid Purity . . . 347
22.3.3.8 High Voltage . . . 347
22.3.3.9 Procedures for the Gas System . . . 347
22.3.4 Exchange of Gas Bottles . . . 348
22.4 Safety Assessment . . . 348
22.4.1 Flammable Gas . . . 348
22.4.1.1 Detector Hut . . . 349
22.4.1.2 Gas Mixing Room . . . 349
22.4.1.3 Bottle on-line / Storage Area: . . . 350
22.4.2 High Pressure Gas Bottles . . . 350
22.4.3 Trip Hazard . . . 350
22.4.4 High Voltage . . . 350
22.5 List of people working on the project . . . 351

23 The Focal Plane Polarimeter **355**
23.1 Overview . . . 355
23.2 Operating Procedure . . . 360
23.3 Carbon Doors . . . 366
23.4 Handling Considerations . . . 368
23.5 Safety Assessment . . . 368
23.6 Authorized Personnel . . . 369

24 The Hall A Gas System **370**
24.1 Overview . . . 370
24.2 Gas Alarms . . . 371
24.3 Authorized Personnel . . . 371

VI Slow Controls 372

25 Overview 373
25.1 System's Components . . . 374
25.2 Operating Procedures . . . 374
25.3 AlarmHandler . . . 375
25.4 ArchiverViewer . . . 375
25.5 bogies_LEFT and bogies_RIGHT . . . 375
25.6 bogies_SetSpec . . . 377
25.7 Menu_Accelerator . . . 378
25.8 Menu_ESR . . . 378
25.9 Menu_HallA . . . 378
25.10StripTool . . . 379
25.11Snapshot . . . 379
25.12Troubleshooting Procedures . . . 379
25.12.1 Authorized Personnel . . . 379

VII Data Acquisition and Trigger 381

26 Spectrometer Data Acquisition 382
26.1 General Computer Information . . . 383
26.2 Beginning of Experiment Checkout . . . 383
26.3 Running CODA . . . 383
26.3.1 Some Frequently Asked Questions about DAQ . . . 384
26.3.2 Quick Resets . . . 385
26.3.3 Cold Start of CODA . . . 385
26.3.4 Recovering from a Reboot of Workstation . . . 386
26.4 Electronic Logbook and Beam Accounting . . . 386
26.5 Port Servers . . . 387
26.6 Authorized Personnel . . . 387

27 Trigger Hardware and Software 389
27.1 Overview . . . 389
27.2 Components . . . 390
27.2.1 Authorized Personnel . . . 392

28 Online Analysis, Data Checks 393
28.0.2 Scaler Display and Scaler Events . . . 393
28.1 Analysis using C++ Analyzer . . . 393
28.1.1 Responsible Personnel . . . 393

VIII Offline Analysis Software 394

29 Podd (C++ Analyzer) 395
29.1 Running Podd . . . 397
29.2 Preparing Analysis of a New Experiment . . . 399
29.3 Database Files and Directories . . . 400
29.4 Program Design Overview . . . 400
29.4.1 Responsible Personnel . . . 401

IX BigBite Spectrometer 402

30 BigBite Magnet 403
30.1 Overview . . . 403
30.2 Description of Magnet . . . 403
30.3 Authority and Responsibility . . . 404
30.3.1 BigBox Power Supply . . . 404
30.3.2 Energizing the BigBite Magnet . . . 404
30.3.3 Magnetic Field Measurements . . . 404
30.4 Location of Equipment . . . 404
30.5 Hazard Analysis . . . 405
30.6 Hazard Mitigation . . . 405
30.7 Operating Guidelines . . . 406
30.7.1 Testing the BigBite Magnet After Installation . . . 406
30.7.2 Enabling the BigBite Magnet For Physics . . . 407
30.7.3 Magnetic Field Measurements . . . 407
30.7.4 Turning Off The BigBox Supply . . . 408
30.7.5 Before Moving BigBite . . . 408
30.8 Authorized Personnel . . . 409

31 BigBite Magnet 410
31.1 Overview . . . 410
31.2 Location of Equipment . . . 410
31.3 Hazard Analysis . . . 410
31.4 Hazard Mitigation . . . 411
31.5 Operating Guidelines . . . 411
31.6 Authority and Responsibility . . . 411

List of Tables

2.1 Principle contacts for safety issues . . . 25
2.2 Contacts for radiation safety issues . . . 26
2.3 Contacts for radiation safety issues . . . 27
2.4 Contacts for radiation safety issues . . . 29
2.5 Contacts for mechanical safety issues . . . 29
2.6 Contacts for mechanical safety issues . . . 30
2.7 Contacts for cryogenic safety and ODH issues . . . 31
2.8 Contacts for vacuum and pressure issues . . . 32
2.9 Contacts for material safety issues . . . 33

4.1 Beamline: Hall A Beamline Elements . . . 48
4.2 Beamline: Optics Requirements Target . . . 50
4.3 Beamline: Optics Requirements Other . . . 50
4.4 Beam line: authorized personnel . . . 53
4.5 BPM: authorized personnel . . . 54
4.6 BCM: authorized personnel . . . 57
4.7 Bremsstrahlung Radiator: Raster Radius . . . 60
4.8 Bremsstrahlung Radiator: Encoder Calibration . . . 60
4.9 Radiator: authorized personnel . . . 61

5.1 Arc Energy Measurement: authorized personnel . . . 67

6.1 eP System: HV Summary . . . 70
6.2 eP System: authorized personnel . . . 85

7.1 Target chamber: authorized personnel . . . 91

8.1 Moller target foils . . . 96
8.2 Moller Polarimeter: authorized personnel . . . 109

9.1 Compton:vertical scan . . . 137
9.2 Compton Polarimeter: authorized personnel . . . 143

11.1 Cryo-target: operation conditions . . . 147
11.2 Cryo Target: experts . . . 150

11.3 Cryotarget: Relief Device Summary . . . 155
11.4 Cryotarget: Gas Properties . . . 156
11.5 Cryotarget: Volumes and Geometry . . . 157
11.6 Cryotarget: Relief Line Information . . . 158
11.7 Cryo Target: personnel and contacts . . . 160

12.1 Operational parameters for the 30 W lasers. . . . 172
12.2 Suggested default parameters for the temperature controller. . . . 184
12.3 Suggested default parameters for the temperature controller (continued). 185
12.4 Polarized ^{3}He target: personnel for working with the coils and power supplies 188
12.5 Maximum condition of the power supplies during ^{3}He target system operation (35 Gauss). . . . 191
12.6 Action of the remote-control switch panel . . . 201
12.7 Coherent laser specifications . . . 207
12.8 Comet laser specifications . . . 208
12.9 Polarized ^{3}He target: authorized personnel . . . 216
12.10 Polarized ^{3}He target: laser trained personnel . . . 217
12.11 Polarized ^{3}He target: personnel for target cell change . . . 217
12.12 Polarized ^{3}He target: personnel for laser alignment . . . 218

13.1 Waterfall target: maximum beam currents . . . 238
13.2 Summary of thin scattering window hydro-tests . . . 246
13.3 Waterfall target: authorized personnel . . . 246

14.1 Vacuum: authorized personnel . . . 252

15.1 HRS: authorized personnel . . . 259
15.2 Spectrometers: Septum cryo states . . . 266
15.3 Septum: failures . . . 272
15.4 Septum: risk . . . 278
15.5 HRS Magnets: extra manuals . . . 280
15.6 Spectrometers: Dipole Checklist . . . 284
15.7 Spectrometers: Q1 Checklist . . . 285
15.8 Spectrometers: Q2/Q3 Checklist . . . 285
15.9 Spectrometers: Dipole NMR Probe Field Ranges . . . 287
15.10 NMR: Problems and solutions . . . 292
15.11 NMR troubleshhoting . . . 292
15.12 NMR: authorized personnel . . . 293
15.13 Collimator: authorized personnel . . . 297
15.14 HRS alignment: authorized personnel . . . 299

16.1 Detectors: Right ARM Detector Locations . . . 304
16.2 Detectors: Left Arm Detector Locations . . . 305

17.1 VDC: authorized personnel . . . 312

18.1 Trigger counters: authorized personnel 320

19.1 Gas-Cherenkov: authorized personnel 324

20.1 Shower: detectors 326
20.2 Shower detectors: authorized personnel 329

21.1 Aerogel counters: authorized personnel 336

22.1 Detailed list of the RICH components. 344
22.2 RICH: authorized personnel 351

23.1 FPP: authorized personnel 369

24.1 Gas for wire chambers: authorized personnel 371

25.1 Slow controls: authorized personnel 379

26.1 DAQ: authorized personnel 387
26.2 Data Acquisition: Port Servers for DAQ 388

27.1 Trigger: authorized personnel 392

28.1 Online analysis: authorized personnel 393

29.1 Analysis modules available in version 1.5 of Podd 398
29.2 Offline analysis: authorized personnel 401

List of Figures

1.1 Hall A schematic cross section 24

3.1 Introduction: Runs/Safe box, Access Keys 36
3.2 Introduction: Location of Hall Safety Items 40
3.3 Introduction: Location of Circuit Breakers 41

4.1 Beamline: Hall A Beamline Overview 49
4.2 Beamline: Hall A Beamline Overview 49
4.3 Beamline: Hall A Beamline Overview 50
4.4 Beamline: BPM Readout Electronics 54
4.5 Beam Current Measurement: Schematic 55

6.1 eP: Layout 69
6.2 eP: LeCroy HV Screen 69
6.3 eP: Beamline HV Screen 71
6.4 eP: HV Screen for Slot 1 71
6.5 eP: HV Screen for Slot 2 72
6.6 eP: HV Screen for Slot 3 72
6.7 eP: Slow Controls Screen 73
6.8 eP: Picture Slow Controls 74
6.9 eP: SSD Bias Voltages Screen 75
6.10 eP: MX7 Controls Screen 76
6.11 eP: Target Control Screen 77
6.12 eP: Picture of Target Control Box 78
6.13 eP: Cherenkov Controls Screen 79
6.14 eP: Layout of CO2 Gas System 80
6.15 eP: Picture of CO2 Gas Controller 81
6.16 eP: DAQ VME Crate 82
6.17 eP: DAQ NIM Bin 83
6.18 eP: DAQ CAMAC Crate 84
6.19 eP: Trigger Configuration 86

8.1 Møller: layout 92
8.2 Møller:MEDM MCC control 95

8.3 Møller:target foils . . . 96
8.4 Møller:target . . . 97
8.5 Møller: FSD crate. . . . 98
8.6 Møller:spectrometer . . . 99
8.7 Møller: electronics crates. . . . 101
8.8 Møller:slow control window . . . 102
8.9 Møller:HV control . . . 103
8.10 Møller: electronics control . . . 104
8.11 Møller: collimator control . . . 105

9.1 compton:Compton Scattering . . . 111
9.2 compton:Schematic layout . . . 113
9.3 compton:Optics Table . . . 114
9.4 compton:chicane schematic . . . 115
9.5 compton:photon detector . . . 116
9.6 compton:electron detector . . . 117
9.7 compton:runcontrol connect . . . 119
9.8 compton:runcontrol configure . . . 120
9.9 compton:runcontrol run type . . . 121
9.10 compton:runcontrol download . . . 122
9.11 compton:runcontrol start run . . . 123
9.12 compton:runcontrol end run . . . 124
9.13 compton:spy_acq high voltage . . . 126
9.14 compton:epics main control . . . 127
9.15 compton:epics mini control . . . 128
9.16 compton:laser spot . . . 129
9.17 compton:servo control . . . 130
9.18 compton:vacity lock . . . 130
9.19 compton:laser ramp control . . . 131
9.20 compton:servo settings . . . 132
9.21 compton:laser control . . . 133
9.22 compton:electron detector circuit breaker . . . 134
9.23 compton:Electron detector control . . . 135
9.24 compton:Electron detector viewer . . . 136
9.25 compton:vertical scan . . . 138

12.1 Overview of the polarized ^{3}He target setup . . . 162
12.2 Top view of the optics setup . . . 167
12.3 Adjusting back-scattering light . . . 171
12.4 Typical 40 cm polarized ^{3}He target cell . . . 174
12.5 Schematic diagram of the target ladder and target positions. . . . 176
12.6 Schematic diagram of the target cell oven control system . . . 178
12.7 Schematic diagram of the oven heater interlock system . . . 179

12.8 Top view of the coils used in the ^{3}He target setup. The combinations of the 3 pairs of Helmholtz coils power the main holding field to either longitudinal, transverse or vertical directions while 3 lines of lasers are available as well in these three directions to polarize the target. The two sets of RF coils are needed to flip the target spin for NMR and EPR measurements with different setups field direction. Four pairs of NMR pick up coils are used during the flips to read out the polarization strength. Two of the pairs are located below the beam line to measure the NMR signal from upstream and downstream part of the target chamber. The other two of the pairs are fixed in the target oven to measure the NMR signal from the pumping chamber. 189
12.9 The electronics located in the Hall A Counting House. 192
12.10Complete diagram of Hall A ^{3}He target system. 193
12.11Circuit for EPR lineshape measurement 195
12.12Circuit for EPR measurement with AFP spin flip 198
12.13Schematic of reference cell system 200
12.14Valve configuration of the reference cell gas system 201
12.15Control panel 202
12.16Polarized ^{3}He Laser Room Layout 210
12.17Polarized ^{3}He Laser Optics Setup 211

13.1 Waterfall target system 220
13.2 Scheme of the target system devices 221
13.3 Pictures of the target and scattering chamber. 222
13.4 The enclosure of the target used for E00-102 and E94-107 223
13.5 Mechanical details of the waterfall target: posts etc. 223
13.6 The Waterfall Target Stack 224
13.7 Schematic view of the hydraulic system. 226
13.8 Picture of the movement system. 228
13.9 Waterfall target: slow control system layout. 230
13.10Waterfall target: the EPICS Crate. 231
13.11Waterfall target control GUI.. 232
13.12Waterfall target: control rack. 233
13.13Heat behavior of the beam entrance window. 235
13.14Preferential scattering angles for E89-003 and E89-033. 236
13.15A cutaway of the waterfall target cell used in E89-003 and E89-033. . . . 236
13.16Preferential scattering angle of the target for the E00-102 experiment. . . 237
13.17IOC rack for waterfall target. 242

14.1 Spectrometers: HRS Vacuum System 249

15.1 Spectrometers: Elevation View of Hall A HRS 254
15.2 Spectrometers: Plan View of Hall A 254
15.3 Spectrometers: Electron Arm Detectors 256

15.4 Spectrometers: Hadron Arm Detectors . . . 257
15.5 Septum: cooling channels on cold mass . . . 264
15.6 Septum: cryogenics diagram . . . 265
15.7 Septum: circuit . . . 267
15.8 Septum: Interlocks . . . 279
15.9 HRS: Magnets control . . . 281
15.10Spectrometers:Septum Controls Screen . . . 283
15.11Spectrometers: NMR System Layout . . . 286
15.12Spectrometers: NMR Gradient Compensation . . . 287
15.13Spectrometers: Control Voltage Calibration for Left Dipole . . . 288
15.14Spectrometers: Control Voltage Calibration for Right Dipole . . . 289
15.15Spectrometers: NMR Probe DAC Calibration . . . 290
15.16Spectrometers: Collimator Box Schematic . . . 295
15.17Spectrometers: Sieve Slit . . . 296

16.1 The side view of the detector stacks . . . 302

17.1 Detectors: VDC Geometry . . . 307
17.2 Detectors: VDC Geometry . . . 307
17.3 Detectors: Gas Flow Schematic . . . 308
17.4 Detectors: VDC Overview . . . 309

18.1 Detectors: S1 Mounting . . . 314
18.2 Detectors: S2 Layout . . . 315
18.3 Detectors: HV HRSR Summary Screen . . . 316
18.4 Detectors: HV Screen for Single Card . . . 316
18.5 Detectors: S2 PMT Housing . . . 317
18.6 Detectors: 2" PMT Base . . . 318
18.7 Detectors: 2" PMT Base . . . 318

19.1 Gas Cherenkov counter . . . 322
19.2 The image from mirror #1 on PMT photo-cathode . . . 324
19.3 The image from mirror #6 on PMT photo-cathode . . . 324

20.1 Schematic layout of part of the shower detectors in the HRS . . . 326
20.2 Detectors: Pre-shower Photo . . . 327
20.3 Detectors: Shower HRS-R HV top . . . 327
20.4 Detectors: Shower HRS-R HV top . . . 328
20.5 Detectors: Shower HRS-L HV . . . 328

21.1 Number of photo-electrons in A1 and A2 vs particle momenta and the amplitude spectra . . . 337
21.2 Aerogel:layout . . . 338
21.3 Aerogel:mirrors . . . 338
21.4 Aerogel: amplification chain . . . 339

21.5 The scheme of A1 detector . . . 340
21.6 The scheme of A2 detector . . . 340
21.7 The diffusion box of A2 detector . . . 341
21.8 Aerogel A1 from inside of the detector . . . 341

22.1 *Working principle of the freon CsI proximity focusing RICH.* . . . 343
22.2 EPICS screen for the RICH slow controls. The fields which have to be checked frequently (once per hour) are marked with red circles. The snapshot shows values for normal operation of the RICH. . . . 352
22.3 EPICS screen for the RICH slow controls after a reboot of the IOC. . . . 353
22.4 EPICS screen for the RICH slow controls while the gas-lines are purged and the detector itself is by-passed. . . . 354

23.1 Detectors: Hadron Arm detector . . . 356
23.2 Detectors: FPP HV Termination Board . . . 357
23.3 Detectors: FPP Readout Board . . . 358
23.4 Detectors: FPP Readout Board . . . 358
23.5 Detectors: FPP Level Shifter Receiver Board . . . 359
23.6 Detectors: Hadron Arm Gas Panel . . . 362
23.7 Detectors: FPP Carbon Door GUI . . . 367

25.1 Right HRS Motion Control . . . 376
25.2 Right HRS Motion Control - additional options . . . 377
25.3 Controls: Hall A Main Control Screen . . . 378
25.4 Controls: Hall A Tools Screen . . . 380

27.1 Data Acquisition: Single Arm Trigger . . . 390
27.2 Data Acquisition: Coincidence Trigger . . . 391

31.1 Photo of damage caused by failure to find a rope that had been attached between BigBite and a pipe. . . . 412

Part I

Hall A OSP Overview

Chapter 1

Introduction [1] [2]

1.1 Technical Information About this Document

This is a PDF document with hyper-references. Browsing is helped by the "bookmark" menu at the left side of the acroread *or* xpdf *window. The objects like citations, figures, tables etc. are hyper-marked. One can "click" on a reference to an object and jump to the page with this object. Jumping back can be done using the right mouse button (*acroread*) or the left arrow button at the bottom of the window (*xpdf*). External references to the Web are also "clickable". In order to use them, make sure that your PDF browser is configured to work with a Web browser (use the button "Preferences" in* acroread*, or provide and edit the file ~/.*xpdfrc *for* xpdf*). One should open a Web browser window and afterward one may use the WWW-links from the PDF browser. Finally, the PDF browsers allow to search for a given pattern in the whole document.*

The areas of text, dedicated to safety issues, are marked by red color throughout this document. Sometimes only the titles of the appropriate sections are marked. Also, red margin bars mark the beginnings of these areas.

LaTeX (more specifically, pdflatex*) is used to produce this document. The document source is kept in CVS [1] format*[3]*.*

Typically, each chapter or a big section occupies one file, and the date of CVS revision of the file is printed in a footnote for the chapter title, along with the name of the author or the person responsible for the chapter.

This document can be printed, but it is better used on-line.

[1] *CVS revision* Id: a-intro.tex,v 1.7 2008/04/01 16:50:02 lerose Exp

[2] Authors: J.LeRose lerose@jlab.org and E.Chudakov gen@jlab.org

[3] Instruction for the document authors/maintainers: `http://www.jlab.org/~gen/osp/doc.pdf`.

1.2 The Purpose of this Document

This document contains the following information concerning the Hall A "base equipment":

- general overview;
- safety assessment;
- technical overview;
- operating procedures;
- performance information.

The requirements to Hall A personnel training are outlined in Sec. 3.2.1. Although reading of this OSP document is not explicitly required, the other documents refer to it, as far as safe operations of the base Hall A equipment are concerned.

The operating procedures are intended to provide shift personnel with the information they need to understand, at least at a rudimentary level, the function of the various subsystems in the end-station. It should also aid in determining if the equipment is performing properly and provide instructions for what to do in the case of malfunctions. This document does not necessary give a complete comprehensive reference to each subsystem, but at least provides a guide for the shift personnel. When appropriate, other references are indicated for the user who requires more information.

A reduced version of this document is available [2], which contains the Safety Assessment part of the document (SAD) along with only very general description of the components.

A comprehensive description of the equipment performance in given in a published paper [3]. This OSP includes some information on this matter in order to help the shift workers to check up the equipment.

1.3 Hall A Overview

The design purpose of Hall A is to study electron scattering on nuclei and nucleons at high luminosity of up to $5 \cdot 10^{38}$ cm^{-2}s^{-1} with high momentum resolution. The $(e, e'p)$ reaction is often utilized. The spectrometers must have high resolution to be able to isolate the different reaction channels in nuclei.

The basic lay-out of Hall A is shown in Fig. 1.1, demonstrating the Hall dimensions. A CAD-drawn 3-dimensional view of the Hall is given on the scalable picture on the cover page.

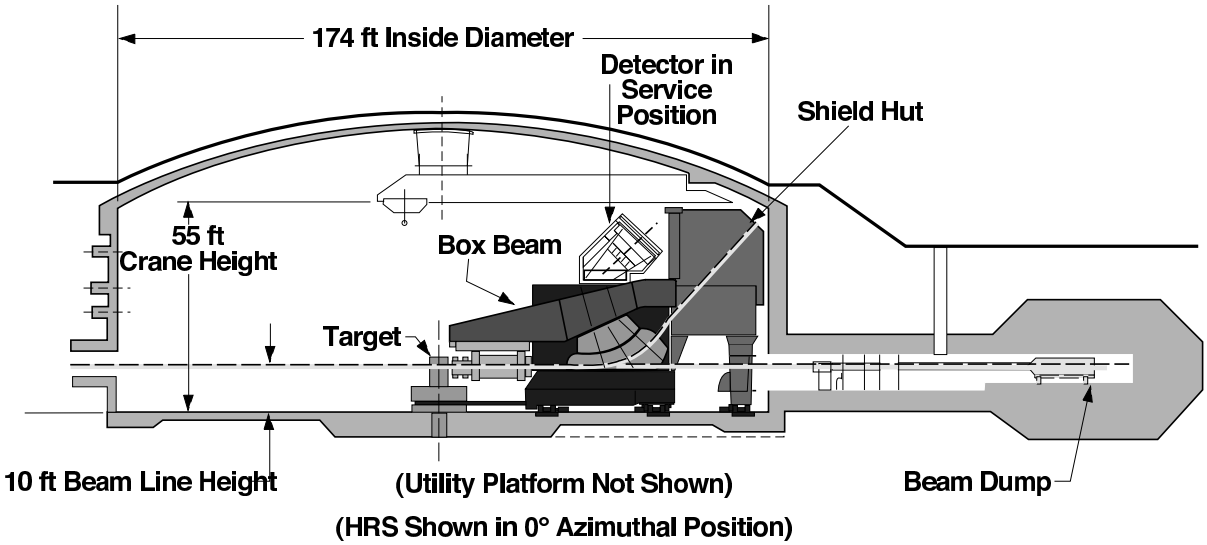

Figure 1.1: Schematic cross section of Hall A with one of the HRS spectrometers in the (fictitious) 0° position.

The beam line transports the CEBAF electron beam, in the energy and current ranges of 0.4 - 6.0 GeV and 0.1 - 120 μA to the target at the Hall center. Various types of targets have been used, including liquid hydrogen and polarized ^{3}He gas. Secondary particles are detected with the two High Resolution Spectrometers (HRS). Both of these devices provide a momentum resolution of better than 2×10^{-4} and a horizontal angular resolution of better than 2 mrad at a design maximum central momentum of 4 GeV/c. The rest of the beam is transported to the high power water cooled beam dump.

The present base instrumentation in Hall A has been used with great success for experiments which require high luminosity and high resolution in momentum and/or angle for at least one of the reaction products.

Chapter 2

Hall A Safety Assessment Overview
[1] [2]

2.1 Overview of the Hazards

The purpose of this section is to give a general overview of the hazards one may encounter while in Hall A, without going into the details of each part of the equipment. In order to be able to operate a particular piece of equipment in a safe way one must study the appropriate section of this OSP manual. The general hazards are:

1. Radiation hazard (see Sec.2.2);
2. Fire hazard (see Sec.2.3);
3. Electrical hazard (see Sec.2.4);
4. Mechanical hazard (see Sec.2.5);
5. Hazard from strong magnetic fields (see Sec.2.6);
6. Cryogenic and Oxygen Deficiency Hazard (ODH) (see Sec.2.7);
7. Vacuum and high pressure hazards (see Sec.2.8);
8. Toxic materials hazard (see Sec.2.9).

The principal contacts for Hall A safety issues are given in Tab.2.1.

Name (first,last)	Dept.	Call [4]		e-mail	Comment
		Tel	Pager		
Ed Folts	JLab	7857		folts@jlab.org	*Safety Warden*
Bert Manzlak	JLab	7556		manzlak@jlab.org	*EHS Engineer*

Table 2.1: Principle contacts for safety issues

[1] *CVS revision* Id: sad-overview.tex,v 1.2 2008/04/01 16:50:47 lerose Exp
[2] Authors: E.Chudakov gen@jlab.org, based on an old ESAD

2.2 Radiation Hazard

The radiation hazards and the ways to mitigate them are described in detail in the course of Radiation Worker I (RW-I) training [5], as well as in the Hall A Radiation Work Permit (RWP). Here, the most essential issues are discussed.

CEBAF's high intensity, high energy electron beam is a potentially lethal radiation source and hence many redundant measures, called Personnel Safety System or PSS [6], are in place, aimed at preventing accidental exposure of personnel to the beam or exposure to beam-associated radiation sources. The PSS keeps ionizing radiation out of areas where people are working, and keeps people out of areas where ionizing radiation is present. The PSS procedure to enter the hall is described in detail in Sec. 3.1.

All of Hall A is qualified as a "Radiologically Controlled Area" [5]. Entrance requirements are listed in Sec.3.2.1. Some areas, such as the target area, and the area around the beam dump may be qualified as a "Radiation Area" or a "High Radiation Area". Some areas may be also qualified as a "Contaminated Area', if removable radio-isotopes are likely to be present. These areas should be marked with appropriate signs and may be delimited by barrier. Access to "Radiation Areas" requires a permit from RadCon, while access to "High Radiation Area", and "Contaminated Area", is not allowed. One should consult the RWP document for more details.

All the items, except those kept in the shielded detector huts of HRS, which stayed in the Hall during CW beam operations, must be surveyed and released by a qualified Radiological Control Technologist from RadCon group, prior to removal from the hall. A rack close to the entrance is used to store these items.

Some electronic modules and racks are posted as potentially contaminated. They must be surveyed and, if necessary, cleaned by RadCon personnel, prior to removal from the Hall, or prior to performing any work on the internal parts of the racks and modules, including the air filters.

More details on radiation safety issues can be found in various sections of this document, as in Chap.10 for target operations and in Sec.4.1 for operation of the equipment on the beam line.

The contacts for Hall A radiation safety issues are given in Tab.2.2.

Name (first,last)	Dept.	Call [4]		e-mail	Comment
		Tel	Pager		
Ed Folts	JLab	7857		folts@jlab.org	*Safety Warden*
Rad-Con	JLab	7236			*RC Group*

Table 2.2: Contacts for radiation safety issues

2.3 Fire Hazard

Fire Hazards are associated with the use of electrical power and also with the use of flammable gases and/or materials.

The flammable gasses include the cryotarget materials such as hydrogen or deuterium (see the details on the hazard and its mitigation in Sec.11.3) as well as the gas used in the wire chamber detectors of the spectrometers (see the details on the hazard and its mitigation in Sec.24.2).

In general an effort has been made to limit the volume of combustible material in the hall but some flammable material is unavoidable. For instance all plastic scintillators are flammable and if exposed to a direct flame these plastic materials will eventually melt. The elements then lose structural integrity, sag or fall to the floor, and the melted elements would likely be exposed to air and burn.

Some special equipment in the subsystems, like heaters, lasers etc., may present a fire hazard (see Sec.12.13.2 and Sec.12.7.2).

The fire hazard in Hall A is mitigated by a VESDA smoke detection system. The main VESDA panel is located in the room at the bottom of the truck ramp on the right hand side as you walk out of Hall A. The clean power in the detector huts is interlocked to the VESDA system. If the VESDA system senses smoke, it will remove power from the huts.

The detector huts are equipped with a clean agent fire suppression system. This system, when triggered by a smoke detector installed on the hut ceiling, releases an inert gas mixture into the hut and dilutes the oxygen level below that needed to sustain combustion. The inert gas is a mixture of nitrogen, argon and carbon dioxide. When the system is functioning properly the oxygen content of the air in the hut will be reduced to approximately 12.5% from the standard 21%. Operation of this system would result in an ODH hazard (see Sec.2.7).

In case of a fire alarm personnel should leave the area. Upon seeing a fire or unexplained smoke one should activate the fire alarm, leave the area and call 911 and 4444 from a safe place (see [7]).

The contacts for Hall A fire safety issues are given in Tab.2.3.

Name (first,last)	Dept.	Call [4]		e-mail	Comment
		Tel	Pager		
Ed Folts	JLab	7857		folts@jlab.org	*Safety Warden*
Bert Manzlak	JLab	7556		manzlak@jlab.org	*EHS Engineer*

Table 2.3: Contacts for radiation safety issues

2.4 Electrical Hazard

Almost every subsystem in Hall A requires AC and/or DC power. Due to the high current and/or high voltage requirements of many of these subsystems the power supplies providing this power are potentially lethal.

Aside from the resetting of a small branch circuit breaker you should not attempt to solve any other problems associated with AC power distribution without consulting

responsible personnel. All the power distribution boxes are clearly marked to aid in finding the appropriate circuit breaker in the event of a problem.

There is a "Hall A power" crash button in the counting house. This is intended for dire emergency use. It is possible to cause severe damage to Hall A systems (in particular the hadron spectrometer dipole) by inappropriate use of this power kill switch.

Anyone working on AC power in Hall A must be familiar with the EH&S [7] manual and must contact one of the responsible personnel. Lock and Tag training may also be required.

The DC power supplies energizing the magnets can provide a very high current. There is a danger of metal tools coming into contact with exposed leads, shorting out the leads, depositing a large amount of power in the tool, vaporizing the metal, and creating an arc. These hazards are mitigated by covers installed around the leads, preventing accidental access to them. The covers must not be removed unless the magnet is turned off using the Lock and Tag procedure by trained personnel.

The electronics NIM, CAMAC, FASTBUS and VME crates are equipped with high current DC power supplies for ± 5 V and other low voltages. Although their power is typically lower than the power supplied for magnets, care should be taken to avoid accidental contact to the leads with metal tools. Typically, covers are installed on the back of the crates or the racks, in order to mitigate the hazard.

Another electrical hazard is caused by high voltage (HV) in a range of 1-3 kV DC power used for photomultiplier tubes. The current per channel, provided by the appropriate power supplies, is limited to about 1-2 mA. The HRS detectors (see Sec.16), as well as the beam line equipment use hundreds of such channels. Typically, the power is provided through special cables (of red color). The cables and SHV connectors meet the existing EH&S standards. Even with the cables disconnected, an accidental contact with the power electrodes is not probable. In order to avoid the hazard to the personnel as well as damage to the equipment, one should not attach/remove HV cables or the phototube bases when HV is present on a given channel. Formally, the "Lock out / Tag out" procedure is not required to operate this equipment. However, turning the HV off and making sure that it is not accidentally turned on remotely or locally, is required. The LeCroy 1458 power supply mainframes, used in Hall A, are equipped with a control key on the front panel. The key should be turned to "local" mode in order to avoid remote operation. If the power supply is located far from the working place, it is recommended that the crate be turned off and the key be removed.

Numerous cables, including HV cables and high current cables, are installed in trays, racks and other accessible areas. Damage to these cables may result in hazards to personnel and equipment.

The contacts for Hall A electrical safety issues are given in Tab.2.4.

2.5 Mechanical Hazard

One source of mechanical hazards includes the heavy movable elements in Hall A, like the HRS 15.2 and the detector hut doors. In order to alert personnel, visible and audible signals are issued when the spectrometers or the doors are moving. The HRS motion can

Name (first,last)	Dept.	Call [4]		e-mail	Comment
		Tel	Pager		
Ed Folts	JLab	7857		folts@jlab.org	*Safety Warden*
Mark Stevens	JLab	6383	584-	stevensm@jlab.org	

Table 2.4: Contacts for radiation safety issues

be controlled remotely from the counting house, in the angular range $> 15°$. Motion at smaller angles must be performed by the hall technicians only (see 2.5). Since motion at large angles may be hindered by equipment stored on the floor, Ed Folts provides "administrative limits" for spectrometer motion for the current time period. Typically, the safe limits for the HRS motion are enforced by pins planted in the hall floor, however the shift crews should be aware of the current limits and never exceed them.

There are conventional hazards like fall hazards and crane hazards. The installed safe ladders and hand rails mitigate the fall hazards. Working on elevated areas beyond the hand rail protection requires the use of safety harnesses or other means. One should consult the contact personnel (see Table2.5) before starting such a work. The safety of crane operations is supervised by the hall technical staff.

The contacts for Hall A mechanical safety issues are given in Tab.2.5.

Name (first,last)	Dept.	Call [4]		e-mail	Comment
		Tel	Pager		
Ed Folts	JLab	7857		folts@jlab.org	*Safety Warden*
Mark Stevens	JLab	6383	584-	stevensm@jlab.org	

Table 2.5: Contacts for mechanical safety issues

2.6 Hazard from Strong Magnetic Fields

Personnel working in the proximity of the energized, strong magnets of the HRS or the beam line are exposed to the following magnetic hazards:

- electrical hazards, described in Sec.2.4;
- danger of magnetic objects being attracted by the magnet fringe field, and becoming airborne;
- danger of cardiac pacemakers or other electronic medical devices no longer functioning properly in the presence of magnetic fields;
- danger of metallic medical implants (non-electronic) being adversely affected by magnetic fields.

Several measures are taken to mitigate the hazards. Whenever a magnet is energized, a flashing red light on the magnet or on the magnet support structure is activated to notify and warn personnel of the associated electrical and magnetic field hazards.

Administrative measures are implemented to reduce the danger of magnetic objects being attracted by the magnet fringe field and becoming airborne. (Note that for most magnets strong magnetic fields are only encountered within non-accessible areas inside the magnet.) Areas where these measures are in effect are clearly marked.

To reduce the danger of magnetic fields to people using pacemakers or other medical implants, warning signs are prominently displayed at the entrance to the hall.

The contacts for Hall A magnetic safety issues are given in Tab.2.6.

Name (first,last)	Dept.	Call [4]		e-mail	Comment
		Tel	Pager		
Ed Folts	JLab	7857		folts@jlab.org	*Safety Warden*

Table 2.6: Contacts for mechanical safety issues

2.7 Cryogenic and Oxygen Deficiency Hazard (ODH)

The superconducting magnets are all operated at temperatures of about 4 K. This temperature is obtained by refrigeration with liquid (or super critical) helium supplied from the End Station Refrigerator (ESR).

During normal operation the superconducting magnets consume ∼14 g/s of Helium. In addition, the cryostats of these magnets have an inventory of liquid Helium. If a magnet "goes normal" for whatever reason this Helium inventory will be rapidly boiled. Relief systems have been installed on the magnets to protect the vessels from building undue pressures during a quench event. However, all superconducting magnets are at least somewhat subject to damage in the event of a quench. The magnets have quench protection circuitry designed to safely dispose of the magnets' stored electromagnetic energy.

Contact with cryogenic fluids presents the possibility of severe burns (frostbite). When handling these fluids, Liquid Nitrogen or Helium, one must follow the guidelines in the EH&S manual [7]. These guidelines mandate the use of cryogenic gloves and eye protection.

All volumes in the cryogenic systems which can be isolated by valves or any other means are equipped with pressure relief valves to prevent explosion hazards. The release and subsequent expansion of cryogenic fluids presents the possibility of an oxygen deficiency hazard. Rapid expansion of a cryogenic fluid in a confined space presents an explosion hazard. Cryogenics in Hall A are present in the superconducting HRS magnets, and the scattering chamber with its cryogenic targets. The total inventory of cryogens in the magnets and targets present a minimal ODH hazard in all areas of the hall except the area above the Hall A crane (see also Sec.11.3.4).

There are a number of vessels which are normally filled with oxygen free atmosphere. These include the gas Cerenkov, the spectrometer vacuum space and the scattering chamber. Service of these vessels could represent a ODH (confined space) hazard.

Hall A is listed as an Oxygen Deficiency Hazard area of Class 0. No unescorted access is allowed without up-to-date JLab ODH training.

No one should enter the Cerenkov tanks while there is gas inside these tanks. The tanks should be pumped out and filled with air before access to the interior of these tanks is permitted. The HRS detector huts may present an ODH hazard in case of the fire suppression system activation (see Sec.2.3), if the doors of the hut are shut. No one may stay in the hut with the doors shut.

The contacts for Hall A cryo and ODH safety issues are given in Tab.2.7.

Name (first,last)	Dept.	Call [4]		e-mail	Comment
		Tel	Pager		
Bert Manzlak	JLab	7556		manzlak@jlab.org	*EHS Engineer*
Ed Folts	JLab	7857		folts@jlab.org	*Safety Warden*

Table 2.7: Contacts for cryogenic safety and ODH issues

2.8 Vacuum and High Pressure Hazards

The greatest safety concern for the vacuum vessels in use in Hall A are the thin aluminum, titanium or kapton windows that close the entrance and/or exit of these vessels. The HRS spectrometer vacuum vessel, and the Hall A Scattering Chamber both contain thin windows.

The HRS Vacuum System is described in detail in Chapter 14. The space between the magnet poles of both spectrometers is evacuated in order to diminish multiple scattering. The entrance and exits of the main spectrometer volumes are covered by relatively thin vacuum windows. The vacuum safety of the cryo-target is described in Sec.11.3.

The HRS spectrometer vacuum can has a volume of approximately 6 m^3. The circular (7 inch diameter) entrance window on the front of Q1 is made of 0.007 inch thick kapton while the rectangular 90.89" by 6.41" exit window located in the shield hut below the VDC is 0.004 inch thick Ti (3,2.5) Alloy. The scattering chamber contains two windows constructed from 0.016 inch thick 5052 aluminum.

Installation of vacuum windows can only be done by the responsible personnel following detailed instructions provided in the Operations Manual. Before entering the detector huts or pivot area, all personnel should check the spectrometer and/or scattering chamber vacuum gauges. If the spectrometers and/or scattering chamber are under vacuum:

- Use careful judgment if it is necessary to work near the vacuum windows;
- Do not work near the windows any longer than is absolutely necessary;
- Never touch the vacuum windows, neither with your hands nor with tools;
- Do not place objects so that they may fall on the windows, etc.;
- Hearing protection is required when working near the target chamber windows and is recommended in the shield huts.

Window covers must be in place over the target chamber whenever the hall is in Restricted access. The windows covers must also be employed whenever extensive work must be done in the area of the pivot. Window covers must be placed over the spectrometer exit windows when they are not covered by the detector package.

The highest gas pressure used in Hall A is about 2000 PSI (∼140 atm) in the bottles of argon and other gasses used to flush the drift chambers of HRS (see Chapter 24). The bottles ("cylinders") are installed in a gas shed outside the hall. To ease handling, gas bottle carts are available for use in the hall and the gas shed. Typically, the Hall A technicians handle the gas bottles. Bottles must never be left free standing. They must always be stored in a rack, on a cart or tied to a support.

Polarized ^{3}He targets contain Helium gas at ∼10 atm in a glass cell. Hearing protection is mandatory when working near the glass cell (see Sec.12.11.3).

The contacts for Hall A vacuum and pressure safety issues are given in Tab.2.8.

Name (first,last)	Dept.	Call [4]		e-mail	Comment
		Tel	Pager		
Bert Manzlak	JLab	7556		manzlak@jlab.org	*EHS Engineer*
Ed Folts	JLab	7857		folts@jlab.org	*Safety Warden*

Table 2.8: Contacts for vacuum and pressure issues

2.9 Toxic Materials Hazard

Some of our target materials may pose a safety concern. Presently the only hazardous target materials used is ceramic Beryllium-Oxide (BeO). In solid form, BeO is completely safe under normal conditions of use. The product can be safely handled with bare hands. However, in powder form all Beryllia are toxic when airborne. Overexposure to airborne Beryllium particulate may cause a serious lung disease called Chronic Berylliosis. Since beryllia are mainly dangerous in powdered form, do not machine, break, or scratch these products. Machining of the Beryllia can only be performed after consulting the EH&S staff. It is good practice to wash your hands after handling the ceramic BeO.

Lead shielding blocks and sheets are also potentially toxic. Always wear gloves when handling lead, unless it is completely painted or wrapped in Heavy-Duty Aluminum Foil. Do not machine lead yourself, contact the EH&S personnel or the Jefferson Lab workshop to ask for assistance prior to machining lead. There are lead storage areas designated in the hall, when not in use, shielding should be stored in an area marked for lead storage.

The Material Safety Data Sheets (MSDS) for all materials encountered in the workplace are available. If in doubt ask the hall safety warden or contact the physics division EH&S staff.

The contacts for Hall A material safety issues are given in Tab.2.9.

Name (first,last)	Dept.	Call [4]		e-mail	Comment
		Tel	Pager		
Bert Manzlak	JLab	7556		manzlak@jlab.org	*EHS Engineer*
Ed Folts	JLab	7857		folts@jlab.org	*Safety Warden*

Table 2.9: Contacts for material issues

Chapter 3

Hall A Access and Safety [1] [2]

3.1 The Personnel Safety System

Users and staff working on the accelerator site are protected from the dangers associated with the prompt ionizing radiation that the accelerator beam produces by the Personnel Safety System or PSS [6]. The PSS keeps ionizing radiation out of areas where people are working, and keeps people out of areas where ionizing radiation is present.

There are a total of five states for the Hall A Personnel Safety System: Restricted Access, Sweep, Controlled Access, RF Power Permit, and Beam Permit.

3.1.1 Restricted Access

Restricted Access is the PSS system state when delivery of beam and/or RF power is not permitted, and entry to and exit from the hall is not controlled by the Personnel Safety System. This is the normal state of the hall when the accelerator is off and no experiments are running. Access is "restricted" only in the sense that the hall is not open to the general public.

3.1.2 Sweep

Sweep is the state of the PSS when delivery of beam and/or RF power is not permitted and access is limited to the Jefferson Lab personnel conducting the sweep operation. The hall's entrance gates are closed from the inside to ensure that no one can enter behind the person conducting the sweep. During the sweep, a "Qualified Sweeper" [6] systematically searches the hall to verify the absence of people and to arm the run/safe boxes. The Qualified Sweeper posts a guard at the entrance to the hall as another method of ensuring that no one enters after him.

When the Qualified Sweeper is ready to perform a sweep, the Machine Control Center or MCC must first place the hall in the Sweep state. The Personnel Safety System will read "Sweep In Progress." Once the hall is placed in the sweep state, the sweep monitors

[1] *CVS revision* Id: access.tex,v 1.6 2008/04/01 16:49:34 lerose Exp

[2] Authors: J.LeRose lerose@jlab.org and E.Chudakov gen@jlab.org

enter the first gate to the hall, making sure it locks behind them. The Qualified Sweeper then notifies the MCC that he is ready to begin the sweep. The MCC communicates with the sweep monitors via intercom and video camera. Using the video camera, the MCC makes sure both sweep monitors are wearing the proper dosimetry and have current ODH training. At this point the Qualified Sweeper also indicates that he is in possession of the key needed to arm the Run/Safe boxes placed throughout the hall. Having confirmed that the dosimetry is adequate, the MCC will unlock the second entrance gate allowing the sweep monitors to enter the hall. Once the sweep monitors pass through the second gate, they close the gate and ensure it is locked. The sweep monitors then proceed to the hall entrance where one sweep monitor is left to guard the entrance and the other begins the sweep. During the actual sweep, the Qualified Sweeper walks through every area and secluded workspace in the hall to ensure that no one could be left inside when the Personnel Safety System moves from the sweep state to controlled access, power permit, and finally beam permit state. Once he checks an area, he arms the run/safe box in that area. After all areas of the hall have been checked and the run/safe boxes armed, the sweep monitors will return to the entrance where the sweep began. Before arming the last run/safe box, the Qualified Sweeper will contact the MCC. Upon contact, the MCC will check to see if the sweep has "dropped"; if all is well he will notify the Qualified Sweeper that it is okay to arm the box. Once the box is armed, the sweep monitors have 30 seconds to exit both gates or the sweep will drop, and the entire sweep process will have to be repeated. After exiting, the Qualified Sweeper must contact the MCC to let them know the Hall can now be moved to the controlled access state.

3.1.3 Controlled Access

Controlled Access is the state of the PSS when delivery of beam and/or RF power is not permitted but the hall is considered a controlled area. In this state, people are "counted" both entering and leaving the hall to ensure that no one is left inside when the Personnel Safety System advances to the RF Permit or Beam Permit states. Hall entry during the controlled access state is permitted only to people authorized or qualified by Jefferson Lab . Entry to and exit from the hall is controlled from the MCC. The Hall cannot be placed in the "controlled access" state without having first been swept.

3.1.4 RF Power Permit

When the PSS is in RF Power Permit the hall is considered an "exclusion area". Delivery of RF power is permitted, but beam delivery is not. Reaching this state requires that the hall has passed through the controlled access state and that no one is left inside the hall. This is usually a temporary state bridging the transition from the Controlled Access to the Beam Permit state. At this stage there is a possibility of interlock equipment being energized and high magnetic fields turned on, however it has not happened in Hall A so far. Once the Personnel Safety System reads "Power Permit", a steady klaxon sounds in the hall. If you are in the hall when this klaxon sounds, press the emergency safe button on the nearest run/safe box and immediately exit the hall. The hall entrance gates are locked at this time, but there is an emergency exit button at each gate which

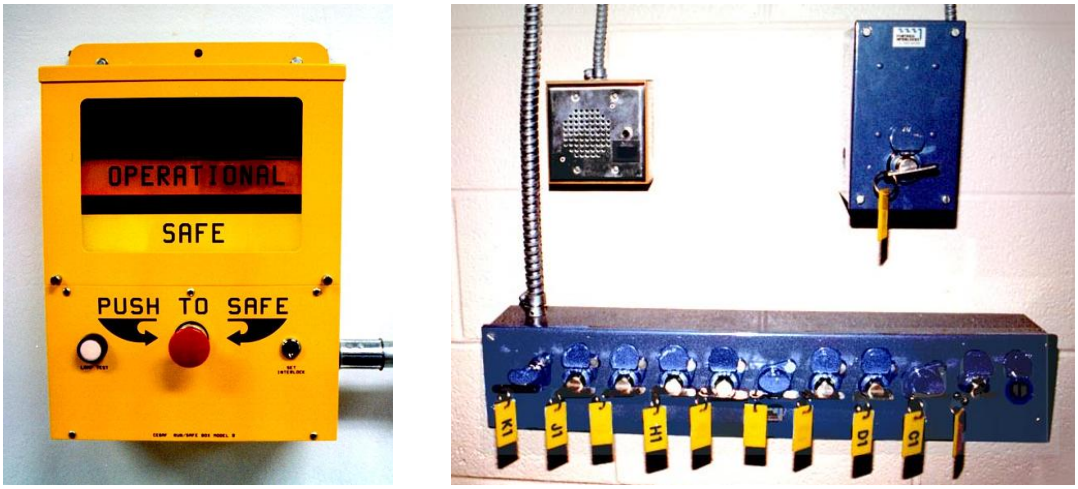

Figure 3.1: Run/Safe box (left) and Access Keys (right)

will allow you to exit. A four-minute delay is built in between the transition from RF Power Permit to Beam Permit.

3.1.5 Beam Permit

When delivery of beam and RF power is permitted to the exclusion area the PSS state is Beam Permit. Reaching this state requires having passed through the RF Power Permit state.

3.1.6 Run Safe Boxes

The Personnel Safety System includes Run/Safe boxes 3.1 which are located throughout Hall A, and approximately every 100 feet in the linac. A run/safe box has three positions: Safe, Operational, and Unsafe. When the hall is in Restricted Access, the run/safe box will be in the Safe position. While in this position, the PSS prevents delivery of beam to the hall. Before beam can be delivered, the hall must be swept to ensure that no one is left inside. During the Sweep, each run/safe box is moved to the Operational position in preparation for Beam Permit. After the sweep has been completed and the hall is placed in the RF Power Permit state, the run/safe box will show Unsafe. Each box has an emergency "Push-to-Safe" button. If you see the box in the Unsafe position, you are in danger of receiving high levels of ionizing radiation. Immediately press the emergency "Push-to-Safe" button, exit the hall, and call the Machine Control Center Crew Chief at extension 7050.

3.2 Hall A Access

Access to Hall A is governed by the "Jefferson Lab Beam Containment Policy and Implementation" document [8]. Work in designated radiation areas will be governed by the Jefferson Lab RadCon Manual [9]. Access procedures during Research Operations depend on the number of individuals who will be entering the hall and the length of time

they are expected to be there. A controlled access is used when a few individuals require entry for a short period of time. If the hall must be open for an extended period and many people will enter, then you should use the restricted access procedure instead of the controlled access procedure. Normally, when requesting a controlled access, the hall will be in either the Beam Permit or RF Permit State - for example, if the beam has been on or it could be shortly. If the hall is not already in the Controlled Access state when you wish to access it, you must request a change to that state from the Machine Control Center at extension 7050 and indicate that you intend to make a Controlled Access. The MCC will then send an Assigned Radiation Monitor to survey the hall. Before anyone enters the hall, the ARM will carry out a radiation survey and post radiation areas. Subsequent entry by individuals during the same Controlled Access period does not require an ARM survey.

3.2.1 Access Requirements

Normally only registered experimenters, authorized contractors or sub-contractors and Jefferson Lab employees may enter experimental areas. In addition, lab policy states that no one under eighteen years of age is allowed access to the experimental halls.
In order to take part in Hall A operations and get access into Hall A one has to fulfill at least the following Jefferson Lab safety training[3]

1. EH&S orientation [7];
2. Radiation Worker I (RW-I) training [5];
3. Oxygen Deficiency Hazard (ODH) training [10].

Additionally, one has to get training specific to Hall A operations. A part of this training is general (independent on the experiment currently running):

4. Hall A safety awareness ("walkthrough") [11][4];
5. Hall A Radiation Work Permit (RWP) (read/sign)[5];
6. Hall A Technical Work Permit (for technical personnel)[6].

In order to take part in shifts of a given experiment the following experiment-specific orientation is required[7]:

7. Conduct of Operations (COO) (read/sign);
8. Experiment Safety Awareness Documents (ESAD) (read/sign);
9. Radiation Safety Awareness Documents (RSAD) (read/sign).

As exception, someone without training items 2(GERT [5] is still required with a temporary TLD dosimeter), 3 and 4 can enter the hall with an escort.

[3]This list is valid as of Dec,2003
[4]Required for entering the Hall and for working in the counting house. For working in the counting house only, the training may be reduced to the appropriate part.
[5]Available in counting house, updated by Ed Folts
[6]Available in counting house, updated by Ed Folts
[7]Available in counting house, provided by the spokespeople of the experiment.

In addition to the above, undergraduate students must undergo a three month trial period. During this period they may work in the hall provided that:

- Their work in the hall is directly supervised by a hall authorized "buddy" (who CANNOT be an undergraduate)
- Either a JLab staff member or a fully trained user has supervisory responsibility for and is fully cognizant of all their work
- The person with supervisory responsibility has approved the "buddy".

After completion of the trial period undergraduates may be approved for work in the halls under the standard guidelines.

Physics Division EH&S personnel should be contacted to obtain the current policy for conducting tours in the experimental areas.

More information on CEBAF operations and safety can be found in:

– Personnel Safety System (PSS) manual [6];
– Accelerator Operations Directive [12].

Reading of this OSP is required for any involvement with the base equipment. It is always referred to from ESAD (see item 7).

3.2.2 Controlled Access Procedure

To make a controlled access when the hall is in the controlled access state, first contact the MCC. The MCC will unlock the first gate at the entrance to the hall. Once inside, the MCC will release the master key 3.1. Remove the master key and insert it into the right-most slot of the row of keys below it. Once the master key is in place, each person wishing to gain access must remove a key from this row. The MCC will then verify each person's name, which key he has, and check that each person is wearing the proper dosimetry. This key-release procedure allows the MCC to keep a "count" of who has entered the hall. After the procedure is complete, the MCC will unlock the second gate at the entrance to the hall. Please note: only one of the entrance gates can be open at a time while in the controlled access state.

When your work is completed and you are ready to exit, return to the entrance gates and call MCC (7050) to notify them of your intention to leave. Once you have entered and closed the first gate, each person must replace his key in the appropriate slot, otherwise the Personnel Safety System will not allow the master key to be released. When the master key is released, place it in its slot, and the MCC will unlock the final gate. When you have exited the final gate, make sure it has closed and locked behind you. If circumstances dictate, request that the MCC return the hall to the beam permit state and that beam be restored. It is important to note that if you need to work in the

HRS shield house during the controlled access, you must go to the control room in the MCC before the access and get a special key which allows you to arm the run/safe box located in the shield house. The run/safe box inside the shield house will drop from the operational position to the safe position as soon as the door to the shield house opens. Unless this box is rearmed with the special key, the beam cannot run.

3.2.3 Restricted Access Procedure

Restricted Access is used when the hall will be open for an extended period of time or a large group will enter to work. To drop the hall to the Restricted Access state, first get approval from Run Coordinator[8] (if one is assigned for the given time period) and Hall A Work Coordinator[9], then notify the MCC that you wish to open the hall in the Restricted Access state. The MCC will drop the hall status to Controlled Access and send an ARM to survey the hall. Before anyone can enter the hall, the ARM will carry out a radiation survey and post radiation areas. The hall is placed in Controlled Access during the survey to ensure that no one enters before it has been completed. Upon completion of the survey and posting of radiation areas, the ARM will leave the hall and notify the MCC that they can drop the hall state to Restricted Access. With the hall in the Restricted Access state, anyone with the appropriate training may enter and work. The key- release procedure is not required.

To return the hall to Beam Permit from the Restricted Access state, a full inspection must be carried out. This is begun by setting all equipment to its operating state (following the Hall A checklist) and then clearing all workers out of the hall. Next, a request is made to the MCC to arrange a sweep of the hall and to restore the Beam Permit state. The MCC will send over a "Qualified Sweeper" and set the hall status to Sweep. The Qualified Sweeper will then sweep the hall, verifying that everyone is out. Following a successful sweep, the MCC can move the hall through the Controlled Access and RF Permit states to the Beam Permit state. While working in the hall you must observe all posted radiation areas. Remember, work inside a radiation area requires that you obtain an approved radiation permit. You must also observe the "two-man" rule, and pay attention to the alarms.

3.2.4 The Hall A Safety Walk-through

In order to improve user awareness of the systems in the hall, users are required to complete a self-guided safety walk-through the experimental area. Information about the walk-through can be found on the web [11]. John LeRose is the JLab staff member responsible for the administration of the Hall A safety walk-through.

Fig. 3.2 shows the location of many of the safety related items in Hall A while Fig. 3.3 shows the location of all the circuit breaker boxes in the hall.

3.2.5 Radiation Safety

[8]The Run Coordinator is the immediate on-site manager of the experiment and is appointed for a period from several days to about two weeks.

[9]Ed Folts, pager 584-7857

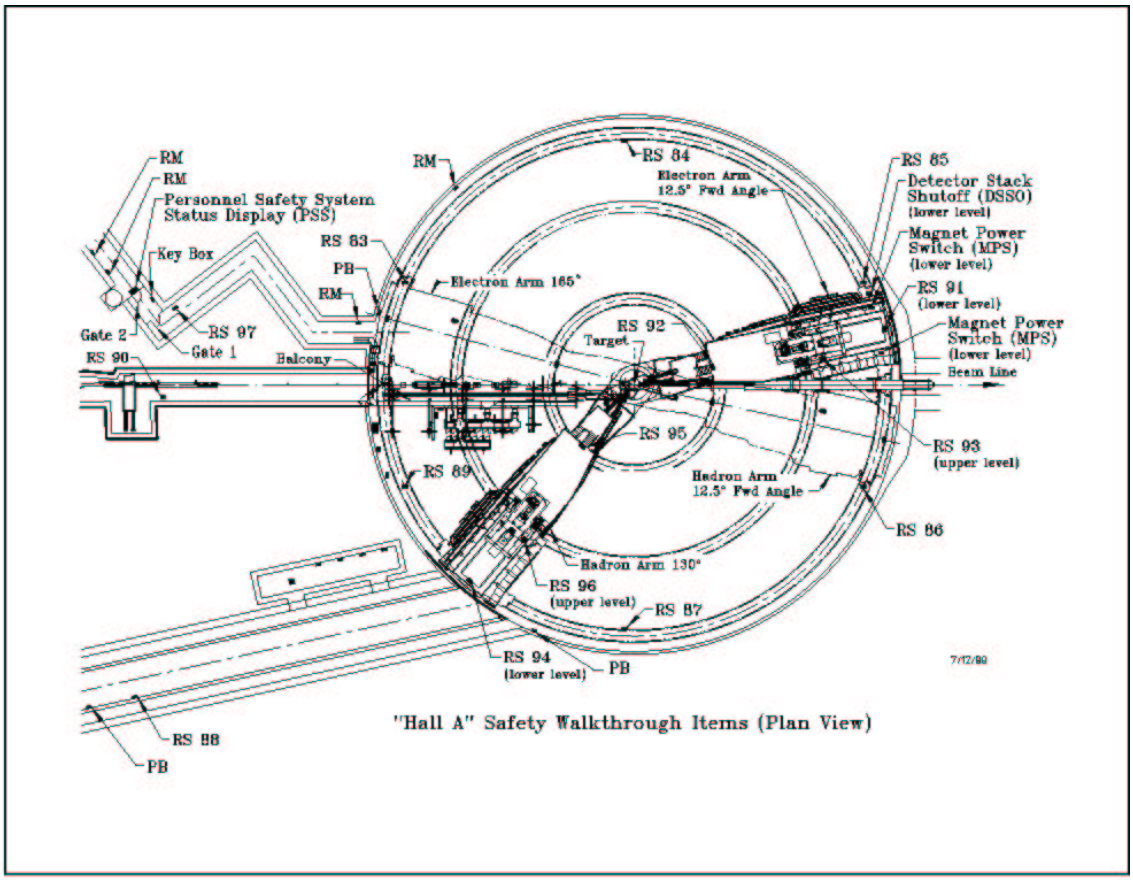

Figure 3.2: Schematic of the Hall A showing the location of various safety system components. The abbreviations are: Radiation Monitor, RM, Run Safe Box, RS, Fire Alarm Pull Box, PB.

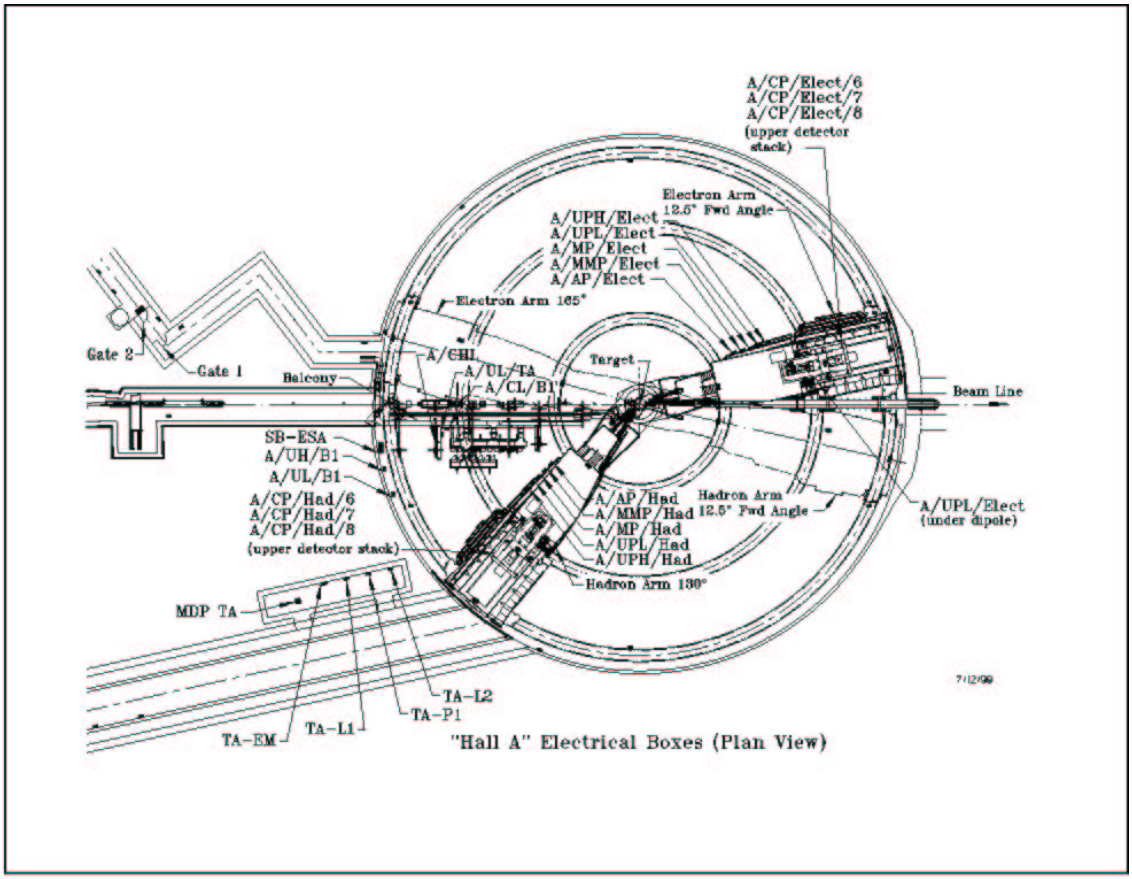

Figure 3.3: Schematic of the Hall A showing the location of the circuit breaker panels.

Radiation Worker I (RW-I) training [5] includes information on the radiation environment in the experimental halls. Here, we remind you of a few items:

- All the area of Hall A is qualified as at least a "Radiation Area".
- Some areas, like the target area, and the area around the beam dump may be qualified as "High Radiation Area".
- All the items, except those kept in the shielded detector huts of HRS, which stayed in the Hall during the CW beam operations have to be surveyed by RADCON, prior to removal from the hall. A rack close to the entrance is used to store these items.
- Some electronic modules and racks may need to be cleaned by RADCON, before removal from the hall.

Part II

Beamline

Chapter 4

General Description [1] [2]

4.1 Introduction

The control and measurement equipment along the Hall A beamline consists of various elements necessary to transport beam with the required specifications onto the reaction target and the dump and to simultaneously measure the properties of the beam relevant to the successful implementation of the physics program in Hall A. The resolution and accuracy requirements in Hall A are such that special attention is paid to the following:

1. Determination of the incident beam energy;
2. Control of the beam position, direction, emittance and stability;
3. Determination of the beam current;
4. Determination of the beam polarization.

A schematic of the Hall A line starting at the shield wall is shown on Fig. 4.1, 4.2 and 4.3.

4.2 Beam Line Components

The main components of the basic Hall A beamline are described in this section. Table 4.1 gives a listing of all the various elements along the Hall A beamline from the switch yard to the dump.

Girder #	Diagnostic Elements	Optics Elements	Valves & Pumps	Element #	Distance (m) from target
		Beam Switch Yard			
	TV Viewer			ITV2C00	148.12862
1CB2		Dipole (2.3m + 0.13m shim)		MLA1C02	146.60000

[1] *CVS revision* Id: beam.tex,v 1.9 2004/12/15 00:12:59 gen Exp

[2] Authors: A.Saha saha@jlab.org

1CB3		BD		MBD1C00V	144.18700
			Valve	VBV1C00A	∼142.78686
	Current			SBC1C00	∼136.99564
	Beam Stopper			SSS1C00	∼136.53844
	Beam Stopper			SSS1C00A	∼136.08124
1C01	BPM			IPM1C01	134.32465
		BC		MQA1C01	133.95000
			Ion Pump	VIP1C01	133.04195
1C02	BPM			IPM1C02	132.02465
		BC		MQA1C02	131.65000
				MBC1C02V	131.30685
1C03	BPM			IPM1C03	129.02465
		BC		MQA1C03	129.35000
			Ion Pump	VIP1C03	
			Rough Pump	VRV1C03	128.44195
			Convectron	VTC1C03	
1CB4		Dipole (1m)		MBN1C04	116.70000
1C04	BPM			IPM1C04	115.42465
		Quad		MQA1C04	115.05000
		BC		MBC1C04H	114.70685
			Ion Pump	VIP1C04	114.14195
1C05	BPM			IPM1C05	112.12465
		Quad		MQA1C05	111.75000
		BC		MBC1C05V	111.40685
			Valve	VBV1C05A	
			Ion Pump	VIP1C05	
			Rough Pump	VRV1C05	110.84195
			Convectron	VTC1C05	
1C06			Valve	VBV1C06	
	BPM			IPM1C06	104.82465
		Quad		MQA1C06	104.45000
		BC		MBC1C06H	104.10685
			Ion Pump	VIP1C06	103.54195
1C07	BPM			IPM1C07	99.52465
		BC		MBC1C07V	98.61076
			Ion Pump	VIP1C07	98.24195
			Arc Section ↓		
1C08	BPM			IPM1C08	93.42465
		Quad		MQA1C08	93.05000
		BC		MBC1C08H	92.70685
		Sext		MSA1C08	92.40500
	TV View			ITV1C08	92.21180
			Ion Pump	VIP1C08	

1CB5		Dipole (3m)		MBA1C05	90.30000
1C09		Quad		MQA1C09	87.85000
		BC		MBC1C09H	87.50685
		Sext		MSA1C09	87.20500
1CB6		Dipole (3m)		MBA1C06	85.10000
1C10	BPM			IPM1C10	83.02465
		Quad		MQA1C10	82.65000
		BC		MBC1C10H	82.30685
		Sext		MSA1C10	82.00500
			Ion Pump	VIP1C10	81.81180
1CB7		Dipole (3m)		MBA1C07	79.90000
1C11		Quad		MQA1C11	77.45000
		BC		MBC1C11V	77.10685
		Sext		MSA1C11	76.80500
			Covectron	VTC1C11	76.61180
1CB8		Dipole (3m)		MBA1C08	74.70000
1C12	BPM			IPM1C12	72.62465
		Quad		MQA1C12	72.25000
		BC		MBC1C12H	71.90685
		Sext		MSA1C12	71.60500
			Ion Pump	VIP1C12	71.41180
1CB9		Dipole (3m)		MBA1C09	69.50000
1C13		Quad		MQA1C13	67.05000
		BC		MBC1C13V	66.70685
		Sext		MSA1C13	66.40500
1CB10		Dipole (3m)		MBA1C10	64.30000
1C14	BPM			IPM1C14	62.22465
		Quad		MQA1C14	61.85000
		BC		MBC1C14H	61.50685
		Sext		MSA1C14	61.20500
			Ion Pump	VIP1C14	61.01180
1CB11		Dipole (3m)		MBA1C11	59.10000
1C15			Valve	VBV1C15	
			Rough Pump	VRV1C15	
		Quad		MQA1C15	56.65000
		BC		MBC1C15V	56.30685
		Sect		MSA1C15	56.00500
1CB12		Dipole (3m)		MBA1C12	53.90000
1C16			Ion Pump	VIP1C16	
			Convectron	VTC1C16	
	BPM			IPM1C16	51.82465
		Quad		MQA1C16	51.45000
		BC		MBC1C16H	51.10685

			Valve	VBV1C16	
Shield Wall → Hall A					
SHIELD WALL(entrance surface)					50.70700
SHIELD WALL (exit surface)					49.651
1C17	TV Viewer			ITV1C17	49.411
		Quad		MQA1C17	49.100
1C18	BPM			IPM1C18	48.650
		Quad		MQA1C18	48.300
		BC		MBC1C18H	47.957
		BC		MBC1C18V	47.761
French	Scanner			IHA1C18A	47.381
Bench	Scanner			IHA1C18B	43.673
1C19		Quad		MQA1C19	43.000
1C20	BPM			IPM1C120	42.550
		Quad		MQA1C20	42.200
		BC		MBC1C20H	41.857
		BC		MBC1C20V	41.661
			Ion Pump	VIP1C20	41.450
COMPTON Polarimeter Region					41.000
					25.500
			Ion Pump	VIP1C20A	34.500
			Ion Pump	VIP1C20B	29.500
	Current			IBC1H00	
				IUN1H00	24.501
				IBC1H00A	
Fast Raster				MRA1H00H	23.000
				MRA1H00V	
			Valve	VBV1H00B	22.053
eP Energy Target				VTP1H00A	19.999
1H01			Valve	VBV1H01	19.018
	TV View			ITV1H01	18.938
	BPM			IPM1H01	18.650
		Quad		MQA1H01	18.300
		BC		MBC1H01H	17.957
Moller target					17.500
1H02		Quad		MQM1H02	16.500
1H03		Quad		MQM1H03	15.415
1H03		Quad		MQO1H03A	14.758
Moller		Dipole		MMA1H03	13.272
1H04		Quad		MQA1H04	9.362
1H04		Quad		MQA1H04A	8.676
Bench		BD		MBD1H04H	8.133
	BLM			IBC1H04A	7.906

BPM		IPM1H04A	7.517
Scanner		IHA1H04A	7.354
BPM		IPM1H04BH	6.829
BPM		IPM1H04BV	6.533
Current		IBC1H04B	6.256
	Ion Pump	VTP1H04	4.493
		VTC1H04A	
BPM		IPM1H04CH	3.784
BPM		IPM1H04CV	3.488
Current		IBC1H04C	3.211
OTR		IOR1H04	2.673
BPM		IPM1H04B	2.378
Scanner		IHA1H04B	2.215
	Valve	VBV1H04B	2.046
	Radiator	ERR1H	0.726
TARGET TV Viewer		ITV1H03A	0.000
DUMP Face			-50.000

Table 4.1: Hall A beamline elements from switchyard to Hall A beam dump (revised - 11/17/03). All distances are from the center of each element to the target (in meters).

4.2.1 The Beam Entrance Channel

The beam entrance channel consists of 63.5 mm inner diameter stainless steel tubing connected with conflat flanges. Through magnets the inner diameter of the tubing is restricted to 25.4 mm. Sections are isolated by vacuum valves and these are listed in Table 4.1. Each section has a roughing port and is pumped with an ion pump. The pressure is about 10^{-6} Torr. There are several sections along the beamline where users interface their equipment. Their individual systems are tested leak tight (to $\leq 10^{-9}$ Atm cm^3/sec).

4.2.2 The Beam Optics Channel

These consist of dipoles, quadrupoles, sextupoles, and beam correctors with their standard girders and stands. Starting from the beam switchyard, there are eight dipoles in the arc section which (along with five other smaller beam deflectors) bend the beam 37.5 degrees into the hall. Each dipole has a quadrupole and a pair of steering magnets (correctors) associated with it. After the shield wall at the entrance to the tunnel into the hall the beam is essentially undeflected onto the target and into the dump.

The beamline optics elements are designed to deliver various optical tunes of the beam on to the physics target as well as simultaneously deliver various optical tunes

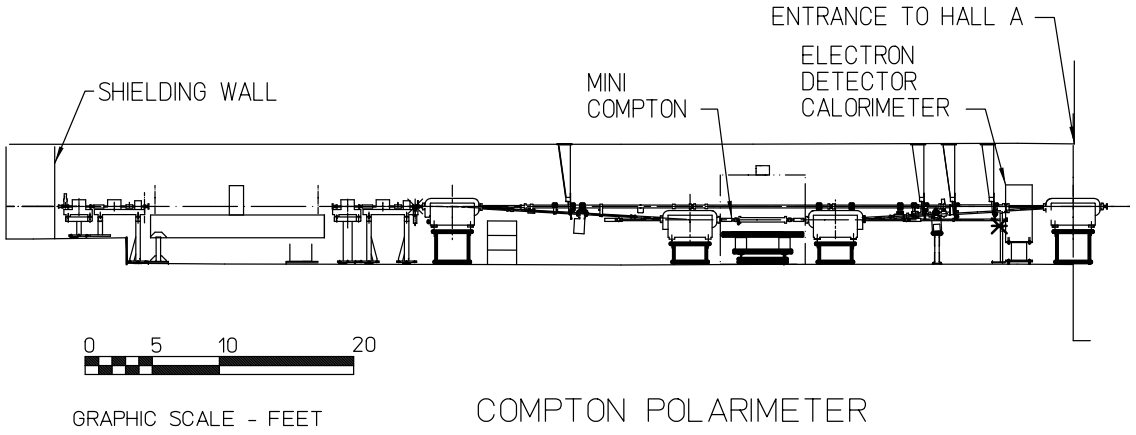

Figure 4.1: Schematic of the Hall A beamline starting at the shield wall to end of alcove.

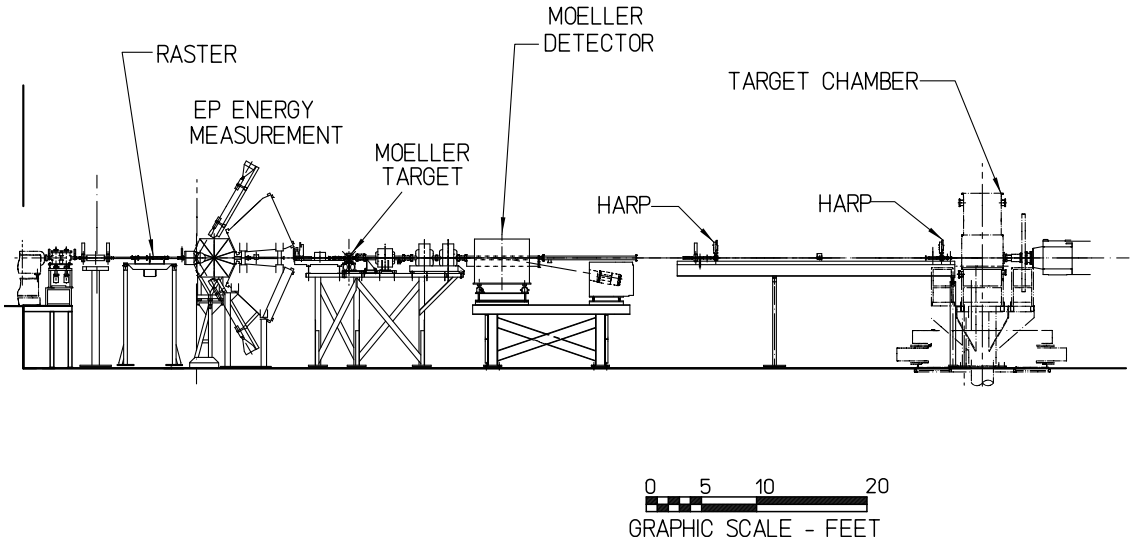

Figure 4.2: Schematic of the Hall A beamline from the end of the alcove to the target chamber.

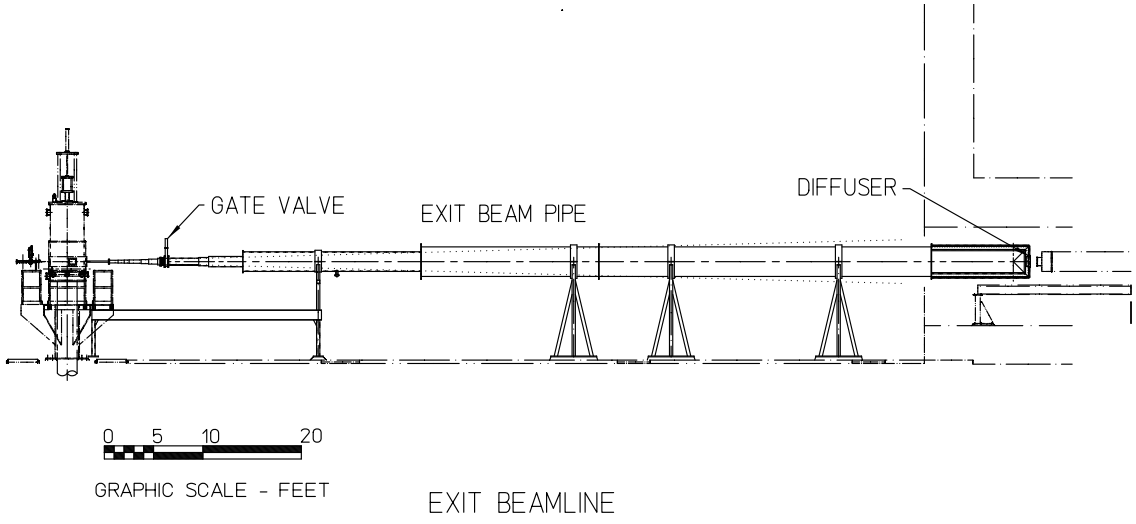

Figure 4.3: Schematic of the Hall A beamline from the target chamber to the dump diffuser.

at other locations along the beamline. These requirements are listed in Tables 4.2 and 4.3. For the basic beamline we are able to deliver beam onto the hall A target in the achromatic mode.

Mode	**Spot Size** $4{\cdot}\sigma_{x,y}$	**Dispersion** η	**Position Stability**	**Size Stability**
Achromat	140μm	0	50μm	50μm
Dispersive	$\propto \eta\delta$	4m to 12m	50μm	50μm
Defocussed	0 to 3mm	0	$\pm$10%	$\pm$10%

Table 4.2: Line A Optics and Beam Requirements at Target

Mode	**Spot Size** $4 \cdot \sigma_{x,y}$	**Dispersion** η	**Position Stability**	**Size Stability**
Energy-eP [3]	>100μm	0	50μm	50μm
Moller Pol.[3]	>250μm	0	50μm	50μm
Compton Pol.	>80μm	0	50μm	50μm
Energy-arc [3] [4]		15m	50μm	50μm

Table 4.3: Line A Optics and Beam Requirements at Other Locations.

[3]Destructive measurements.

[4]Build dispersion in arc section with all magnetic elements except dipoles turned off.

Build dispersion in arc section with all magnetic elements except dipoles turned off.

4.2.3 Beam Diagnostic Elements

These consist of beam position monitors (BPMs), beam current monitors, wire scanners (superharps) and beam loss monitors. The wire scanners are fabricated by Saclay (French collaboration) and four have been installed along the beamline, two before the arc section and two after the arc section. They are essential for the beam energy determination by the arc method. Another two wire scanners are installed on the bench just before the target to determine the beam position and direction of the beam at the target point with high precision and also measure the emmitance of the incident beam. They are also used to absolutely calibrate the two associated beam position monitors located in front of the target.

4.2.4 Beam Exit Channel

After the target vacuum chamber, which was built by the University of Virginia, there is an exit beam pipe which transfers the scattered beam onto the dump tunnel under vacuum. This exit beam pipe is made of a thin walled aluminum spiral corrugated pipe of welded construction. The largest diameter is 36 inches with a 0.164 inches wall thickness and the smallest diameter is 6 inches with a 0.042 inches wall thickness. The whole assembly is rather light (approximately 800 kg) and is supported by H shaped adjustable stands. To prevent possible linear collapse of the larger diameter sections under vacuum load, four aluminum channels of total cross-sectional area of 3" are welded to its side. A vacuum of 10^{-5} Torr is maintained with a turbomolecular pump. The exit face of this pipe has a 12" port and is connected to the diffuser with a Beryllium window.

4.3 Machine/Beamline protection system

The MPS [13] system is composed of the Fast Shutdown System (FSD), Beam Loss Monitor (BLM), and gun control system.

The FSD system is a network of permissive signals which terminate at the electron gun and chopper 1. The permissive to the gun and chopper 1 may be inhibited by any device connected to an FSD mode. Devices connected to the FSD system include vacuum valves, RF systems, Beam loss systems, beam current monitors, beam dumps, and particular to Hall A, the target motion mechanism and the raster (value and derivative).

The gun control system includes software program which monitors beam operating conditions and the state of the FSD and BLM systems. the program will warn the operators if a potential for beam damage exists. Potential for damage exists when running high average current beam, when FSD nodes are masked and when the beam power approaches the operating envelope limits for a specific beam dump.

4.4 Safety Assessment

All magnets (dipoles, quadrupoles, sextupoles, beam correctors) and beam diagnostic devices (BPMs, scanners, Beam Loss Monitor, viewers) necessary for the transport of the beam are controlled by Machine Control Center (MCC) through EPICS [14], except for special elements which are addressed in the subsequent sections. The detailed safety operational procedures for the Hall A beamline should be essentially the same as the one for the CEBAF machine and beamline.

The personnel should keep in mind the potential hazards:

1. Radiation "Hot Spots" - marked by ARM or RadCon personnel;
2. Vacuum in the beam line tubes and other vessels;
3. Thin windows:
   - exit of Møller dipole - see Chapter 8;
   - vacuum chamber - see Chapter 14;
4. Electric power hazards in vicinity of the magnets;
5. Magnetic field hazards in vicinity of the magnets.
6. Conventional hazards (fall hazard, crane hazard etc.).

Some magnets, as the Møller spectrometer elements, are covered with plastic sheets for electric safety. Any access to these magnets requires the "Lock and Tag" procedure [7] and the appropriate training, including the equipment-specific one.

Additional safety information is available in the following documents:

- EH&S Manual [7];
- PSS Description Document [6]
- Accelerator Operations Directive [12];

4.5 Authorized Personnel

Name (first,last)	Dept.	Call [4]		e-mail	Comment
		Tel	Pager		
Hall A Physicists					
Arun Saha	JLab	7605		saha@jlab.org	*1-st Contact*
Jian-Ping Chen	JLab	7413	584-	jpchen@jlab.org	*2-nd Contact*
Liaisons from Accelerator Division					
Hari Areti	JLab	7187	584-	areti@jlab.org	..to Physics
Darrell Spraggins	JLab	6070		spraggin@jlab.org	..to Hall-A

Table 4.4: Beam Line: authorized personnel

4.6 Beam Position Monitors [5] [6]

To determine the position and the direction of the beam on the experimental target point, two Beam Position Monitors (BPMs) are located at distances 7.524 m (IPM1H03A) and 1.286 m (IPM1H03B) upstream of the target position. The BPMs consist of a 4-wire antenna array of open ended thin wire striplines tuned to the fundamental RF frequency of 1.497 GHz of the beam [15]. The standard difference-over-sum technique is then used [16] to determine the relative position of the beam to within 100 microns for currents above 1 μA. The absolute position of the BPMs can be calibrated with respect to the scanners (superharps) which are located adjacent to each of the BPMs (IHA1H03A at 7.353 m and IHA1H03B at 1.122 m upstream of the target). The schematic of the readout electronics is shown in Figure 4.4. The position information from the BPMs can be recorded in three different ways:

1. The averaged position over 0.3 seconds is logged into the EPICS [14] database (1 Hz updating frequency) and injected into the datastream every 3-4 seconds, unsynchronized but with an orientative timestamp. From these values we can consider that we know the average position of the beam calculated in the EPICS coordinate system which is left handed.

2. Approximately once a shift (or more often if requested by the experimenters) a B-scope procedure [17] can be performed using the same EPICS electronics which then gives the peak-to-peak variation of the beam.

3. Event-by-event information from the BPMs are recorded in the CODA datastream from each of the 8 BPM antennas (2x4) from which the position of the beam can be reconstructed. However, these raw values belong to a parallel electronics chain whose constants have to be retrieved by calibrations to the EPICS or scanner data.

4.6.1 Authorized Personnel

[5] *CVS revision* Id: bpms.tex,v 1.5 2003/12/13 06:23:37 gen Exp

[6] Authors: A.Saha saha@jlab.org

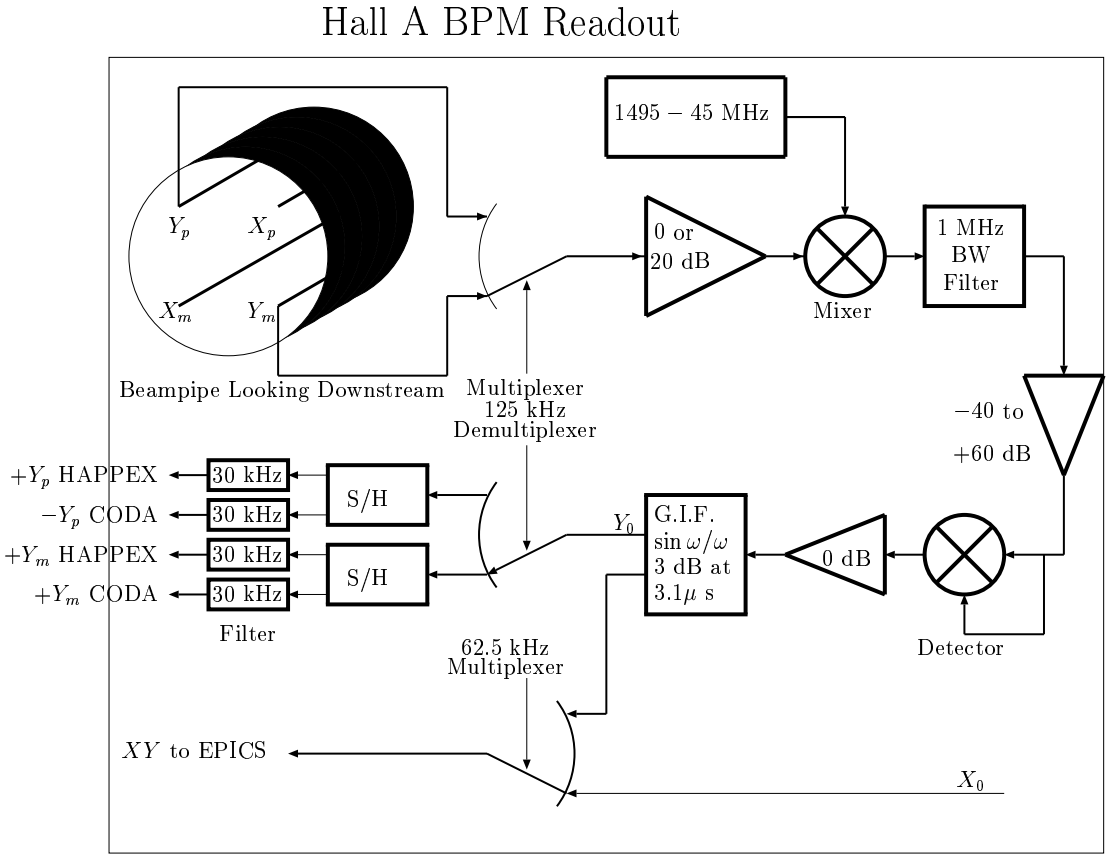

Figure 4.4: Schematic of the BPM readout electronics

Name (first,last)	Dept.	Call [4]		e-mail	Comment
		Tel	Pager		
Arun Saha	JLab	7605		saha@jlab.org	*Contact*

Table 4.5: Beam Position Monitor: authorized personnel

4.7 Beam Current Measurement [7] [8]

The Beam Current Monitor (BCM) is designed for stable, low noise, non-intercepting beam current measurements. It consists of an Unser monitor, two rf cavities, the electronics and a data acquisition system. The cavities and the Unser monitor are enclosed in a box to improve magnetic shielding and temperature stabilization. The box is located 25 m upstream of the target. You can recognize it as a grey object on the stands, about 2 m downstream from where the beam enters the hall.

The DC 200 down-converters and the Unser front end electronics are located in Hall A. The temperature controller, the Unser back end electronics and its calibration current source, cavity's RF unit (housing the RMS-to-DC converter board) and all multi-meters, VME crate and computers are located in Hall A control room.

4.7.1 System Layout

The schematic diagram of the BCM system is presented in Fig. 4.5.

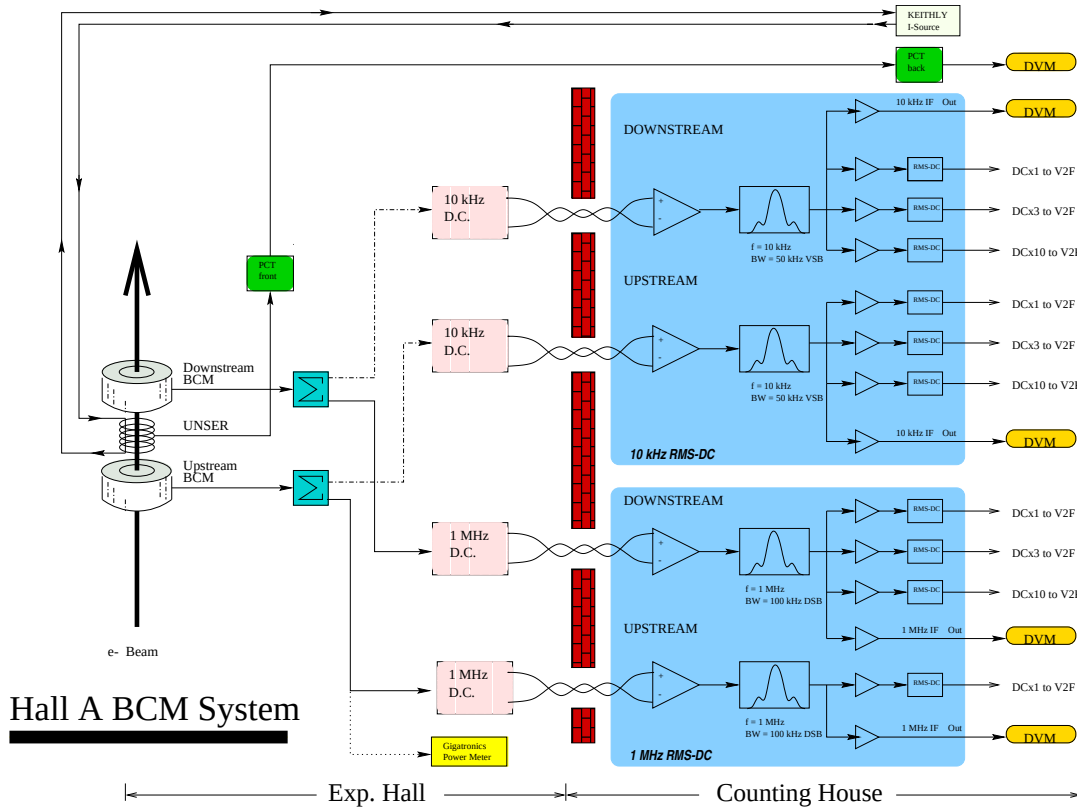

Figure 4.5: Schematic of the Hall A beam current measurement system.

[7] *CVS revision* Id: bcm.tex,v 1.6 2004/12/15 00:12:59 gen Exp

[8] Authors: A.Saha saha@jlab.org

The Unser monitor is a Parametric Current Transformer designed for non-destructive beam current measurement and providing an absolute reference. The monitor is calibrated by passing a known current through a wire inside the beam pipe and has a nominal output of 4 mV/μA. It requires extensive magnetic shielding and temperature stabilization to reduce noise and zero drift. As the Unser monitor's output signal drifts significantly on a time scale of several minutes, it cannot be used to continuously monitor the beam current. However, this drift is measured during the calibration runs (by taking a zero current reading) and removed in calibrating the cavities. The more stable cavities are then used to determine the beam current and charge for each run. We also use the OLO2 Cavity Monitor and the Faraday Cup 2 at the Injector section to provide an absolute reference during calibration runs.

The two resonant rf cavity monitors on either side of the Unser Monitor are stainless steel cylindrical high Q ($\sim$ 3000) waveguides which are tuned to the frequency of the beam (1.497 GHz) resulting in voltage levels at their outputs which are proportional to the beam current. Each of the rf output signals from the two cavities are split into two parts. One part of the signal is converted to 10 kHz signals (by the "downconverters") and fed into an RMS-to-DC converter board consisting of a 50 kHz bandpass filter to eliminate noise, amplified and split to two sets of outputs, which after further processing are recorded in the data stream. These two paths to the data stream (leading to the sampled and integrated data) will now be described. (The other part of the split signal is downconverted to 1 MHz signals and represents the old system (pre Jan 99). Only the HAPPEX collaboration presently uses these signals.)

For the sampled (or EPICS [14] or Slow) data, one of the amplifier outputs is sent to a high precision digital AC voltmeter (HP 3458A). Each second this device provides a digital output which represents the RMS average of the input signal during that second. The resulting number is proportional to the beam charge accumulated during the corresponding second (or, equivalently, the average beam current for that second). Signals from both cavity's multi-meters, as well as from the multi-meter connected to the Unser, are transported through GPIB ports to the HAC computer where they are recorded every 1 to 2 seconds via the data-logging process which is described in the calibration procedure. They are also sent through EPICS to CODA and the data stream where they are recorded at quasi-regular intervals, typically every two to five seconds.

For the integrated (or VTOF or Fast) data, the other amplifier output is sent to an RMS-to-DC converter which produces an analog DC voltage level. This level drives a Voltage-To-Frequency (VTOF) converter whose output frequency is proportional to the input DC voltage level. These signals are then fed to Fastbus scalers and are finally injected into the data stream along with the other scaler information. These scalers simply accumulate during the run, resulting in a number which is proportional to the time integrated voltage level and therefore more accurately represents the true integral of the current and hence the total beam charge. The regular RMS to DC output is linear for currents from about 5 μA to somewhere well above 200 μA. Since it is non-linear at the lower currents, we have introduced a set of amplifiers with differing gains (x3 and x10) allowing the non-linear region to be extended to lower currents at the expense of

saturation at the very high currents. Hence there are 3 signals coming from each BCM (Upx1, Upx3, Upx10, Dnx1, Dnx3, Dnx10). All 6 signals are fed to scaler inputs of each spectrometer (E-arm and H-arm) . Hence we have a redundancy of 12 scaler outputs for determining the charge during a run. During calibration runs we calibrate each of these scaler outputs.

4.7.2 Authorized Personnel

All Hall A members are authorized to take BCM calibration data using the Standard Non-Invasive Hall A BCM Calibration Procedure. The extended calibration procedures involving the Faraday Cup 2 and the OLO2 monitor at the Injector are presently performed by A. Saha.

The Accelerator EES group performs the maintenance of the BCM monitors. These include:

1. The Unser calibration. Every 3 months
2. Resonant Cavities Tuning. Every Downtime
3. Multi-meters Autocalibration. Every Downtime
4. Connectors Cleaning. Every year
5. Unser Keithley Current Source. Calibration Yearly
6. Digital Multi-meters HP3458A and HP 34401A. Calibration Yearly

System Contacts are shown in Table 4.6.

Name (first,last)	Dept.	Call [4]		e-mail	Comment
		Tel	Pager		
Arun Saha	JLab	7605		saha@jlab.org	*Contact*
John Musson	JLab	7441	438-	musson@jlab.org	Accel. expert

Table 4.6: Beam Current Monitor: authorized personnel

4.8 Fast Raster [9] [10]

The beam is rastered on target with an amplitude of several millimeters at 25 kHz to prevent overheating. The raster is a pair of horizontal (X) and vertical (Y) air-core dipoles located 23 m upstream of the target.

Since 2003 we've used the triangle-wave raster pattern designed by Chen Yan. This achieves a very uniform rectangular density distribution of beam on the target by moving the beam with a time-varying dipole magnetic field whose waveform is triangular with very little dwell time at the peaks. The electronics design is an "H-bridge" in which switches are opened and closed at 25 kHz, to switch between two directions of current (100 A peak-to-peak) through the raster coils.

One can view the status of the raster in the EPICS overview screen called "General Accelerator Parameters" where the set-point for the radius amplitude and the readback of the peak-current in the raster are displayed.

Control of the raster is done by first asking the MCC operators to set up the raster for a particular size typically 2 mm square. The control software assumes a field-free region between the raster and the target, so it is only approximately correct because there are several quadrupoles in this region. It is important to check the raster spot size and make adjustments if necessary. The adjustment is made by asking MCC to change the size and noting the linear relationship between what their software says the size is and the actual size. Relatively small independent adjustments to the gains on the X and the Y raster coils are available in the middle room of the hall A counting room using the "PGA Controller" knobs; however, it is not recommended to touch these. Near these knobs is also located an oscilloscope X-Y trace of the current in the raster. A fast shutdown (FSD) shuts the beam down within 0.1 msec if the raster fails, thus affording some protection of the target.

NOTE: If you are unsure of the status of the raster, measure the spot size with very low current ($\leq 2\mu A$) or with the target out of the beam. It would be a mistake to check the beam spot size with high current on target; by the time you check it, the target may already be destroyed. The rastered beam spot on target can be checked with plots in the ROOT analyzer or by using the stand alone code called spot, also called raster. For more details on usage, type spot -h (help) on the ADAQ computers.

Regarding the BPM measurements, it should be noted that the stripline BPMs displayed by spot have a high-frequency cutoff of approximately 30 kHz. Since the raster frequency is 25 kHz the plot of the amplitude distribution shows spikes at the limits of the orbit, instead of a flat distribution. The scale factor between what is seen in spot and the real width of the beam is ~ 1.5, i.e. the beam is 1.5 times bigger than the naive reading of the spot distribution.

[9] *CVS revision* Id: raster.tex,v 1.8 2008/03/11 21:39:44 rom Exp

[10] Authors: R. Michaels rom@jlab.org

4.9 Bremsstrahlung Radiator [11] [12]

4.9.1 Overview

The Bremsstrahlung radiator is the last element in the Hall A beam line before the scattering chamber, and is about 72.6 cm from the center of the physics targets. Its design is based on the Hall C radiator system built by David Meekins, and documented in the Hall C operations manual.

The central component of the system is a U-shaped, oxygen-free copper target ladder, with six positions for differing thicknesses of oxygen-free Cu foils. The ladder is designed so that it never intersects the beam. The 3.175-cm wide gap in the ladder is spanned only by the target foils, which are 6.35 cm wide, 3.175 cm high, and 3.332 cm apart (center to center). A stepper motor moves the target ladder with foils up and down, into and out of the beam. Hard stops prevent motion of the ladder beyond the limit switches. Water cooling of the radiator ladder cools the foils, preventing damage from overheating by the beam.

The interaction of the beam with the foils produces background radiation in the Hall. For normal operation of the radiator, currents of 30-50 μA and energies above 1 GeV, ion chamber trip levels do not need to be adjusted. At energies below 1 GeV, it might be desirable to use lower beam currents or thinner radiatior foils. No local shielding is installed, as calculations indicate that this will not significantly affect dose at the site boundary. Any installation and/or subsequent modifications must be coordinated with RadCon.

4.9.2 Safety Issues

The only safety issue concerning the Bremsstrahlung radiator is that of induced radioactivity in the Cu targets and in the water used for cooling the targets. The water cooling system is a closed loop, using a portable welding-torch water cooler, located under the beam line just upstream of the target. The cooler is kept in a tray which is intended to provide secondary containment in case of a leak. The cooling system must not be breached or drained without concurrence from the RCG. Accidental breach or spill constitutes a radiation contamination hazard. A spill control kit, capable of containing a system leak or spill, is staged by the door to the hall. In the event of a spill notify the RCG.

4.9.3 Operations

Although the radiator foils are water cooled, a high current electron beam may melt the foils. Beam currents with the radiator will be limited to 30 micro-amperes. Including a safety factor, the raster radii given in Table 1 will limit the temperature rise to 100 °C.

[11] *CVS revision* Id: radiator.tex,v 1.8 2004/12/15 00:13:00 gen Exp

[12] Authors: A.Saha saha@jlab.org

Table 4.7: Raster radius as a function of beam current.

Current (μA)	Minimum raster radius (mm)
10	(not needed)
15	0.2
20	0.7
25	1.3
30	2.1

Table 4.8: Encoder voltage calibration. See text.

Position	Voltage ratio	V_{encoder} for $V_{\text{supply}} = 5$ V
out limit	0.030	0.15
foil 1	0.102	0.511
foil 2	0.269	1.346
foil 3	0.436	2.179
foil 4	0.603	3.013
foil 5	0.769	3.847
foil 6	0.936	4.681
in limit	0.966	4.831

The only operational control consists of moving the ladder in and out. Radiator position is determined by the ratio of the readback voltage from a linear encoder to the voltage applied to it. Table 2 gives the radiator position as a function of this ratio. The foil thicknesses are set so that the thickness, in percent of a radiation length, equals the foil number, except that no foils are mounted in position 1.

Software controls of the ladder position are under development; radiator position is changed by calling MCC and requesting that the radiator be set to some foil position, or to the out limit. The position may be changed with beam on. A manual-control backup system also exists.

Both software and manual backup systems control an Oregon Micro Systems MH10DX step motor driver, which drives a Slo-Syn M063-LS09 stepper motor. The MH10 driver, power supplies, and other control circuitry, are in a custom-built box located in the hall in rack 1H75B10. The linear encoder voltage ADC is in slot 5 of the CAMAC crate in rack 1H75B02; radiator inputs use channels 15 and 16, and are connected through a patch panel to block 30 in rack 1H75B08.

When the radiator is not being used, the system should be set to the out-limit

position, so that it is clear of the beam. Power to the control box in the hall may be turned off with a front-panel switch if the radiator will not be used for a long time - and should be turned off if work is to be done on the radiator. This deactivates the limit switches and the linear encoder, but does not affect positioning. Additional hard stops should be installed as a safety measure. The Hall A technical staff checklist, done as part of preparations for closing the Hall for beam, includes checking the radiator position, the status of the control box, and the installation of hard stops.

4.9.4 Special Instructions

Care must be taken in case any removal or disassembly of the radiator system is needed. Disconnecting the stepper motor from the motor driver while power is on can damage the motor, motor driver, and VME44 board.

The Cu targets will certainly be activated in the course of an experiment. Therefore, only remove the Cu target, the target ladder, and/or the whole radiator system in the presence of a Radcon officer.

4.9.5 Authorized Personnel

The responsible personnel is shown in Table 4.9.

Name (first,last)	Dept.	Call [4]		e-mail	Comment
		Tel	Pager		
Arun Saha	JLab	7605		saha@jlab.org	*Contact*
Any work on hardware should include:					
Ronald Gilman	Rutgers	7011		gilman@jlab.org	Expert , or
Dave Meekins	JLab	5434	449-	meekins@jlab.org	Target group
Rad-Con	JLab	7236			876-5342
					emergency

Table 4.9: Radiator: authorized personnel

Chapter 5

Arc Energy Measurement [1] [2]

The ARC energy measurement is under EPICS [14] control through a MEDM [18] display. Two independent control systems are used: the beam bend angle measurement through the arc ("scanners") and the field integral of the arc ("integral"). To measure the energy:

- perform several angle measurements
- perform an integral measurement
- analyze the integral measurement and note the value of the arc field integral
- analyze the angle measurements, average the results (proposed by the software), then ask for the energy calculation, enter the above arc field integral and you will get the beam energy computed from the average angle.

5.1 Summary of ARC operations

Six scanners of the same type, called "ARC scanner" and labelled from scanner #1 to #6, are installed on the Hall-A beamline. Scanners #1 to #4 are used for the ARC energy measurement and they are located on the Hall-A arc: #1 [1HA1C07A] and #2 [1HA1C07B] just upstream of the arc, in the BSY, and #3 [1HA1C18A] and #4 [1HA1C18B] in the Hall-A tunnel, just upstream the Compton polarimeter. Scanners #5 [1HA1H03A] and #6 [1HA1H03B] are located between the Moller and the target to control the beam geometry on the target and their use will not be discussed here.

Procedure for running a harp scan is described elsewhere[3]

Each scanner has a motor/ball-screw/shaft-encoder/vacuum-penetrator system moving accurately a set of 3 tungsten wires through the beam. Each time a wire crosses the

[1] *CVS revision* Id: arc.tex,v 1.8 2004/12/15 00:12:59 gen Exp

[2] Authors: A.Saha saha@jlab.org

[3] Harp scan procedure http://hallaweb.jlab.org/equipment/beam/harp_halla/harp.html.

beam a PMT located a few meters downstream records a signal due to the electromagnetic shower induced by the beam in the wire. Both forward and backward passes are recorded. The motion is a horizontal translation and, for a forward pass:

-the translation is from beam left to beam right,

-the two first wire crossing the beam are at 45deg from the vertical,

-the third wire, which is the only important for the ARC energy measurement, is vertical.

Recording, during the scan, the scanner position and the PMT output voltage allows us to determine the beam position at each scanner location. Then, using calibration data not detailed here, we deduce the net beam bend angle through the arc. This result measured in dispersive arc tuning, along with the field integral of the arc dipoles, provides an accurate determination of the beam energy.

5.2 Summary of field integral

The purpose is to measure absolutely the straight field integral of a "BA" 3m long dipole, called the "9th dipole" and located in the "Dipole Shed". It is of the same type as the 8 arc dipoles and is powered in series with them.

The ARC integral setup is basically made of a 3m long plate (the "probe") which is able to move inside the 9th dipole gap along the beam axis and carrying two field measurement devices: a pair of pick-up coils connected in series and a set of NMR probes. The coils are on both ends of the probe and the NMRs close to the center.

-at the "upstream" probe position, the "downstream" coil is close to the dipole center, the "upstream" is outside the dipole and the NMRs at one end of the dipole:

Door< −− .....< −−−−-DIPOLE−−−− − − >

.....< −−−−-PROBE−−−−− − − >

-at the "central" probe position, each coil is at one end of the 3m long dipole and the NMRs close to the dipole center:

Door< −− .....< −−−−-DIPOLE−−−− − − >

.....< −−−−-PROBE−−−−− − − >

-at the "downstream" probe position, the "upstream" coil is close to the dipole center, the "downstream" is outside the dipole and the NMRs at one end of the dipole:

Door< −− .....< −−−−-DIPOLE−−−− − − >

.....< −−−−-PROBE−−−−− − − >

We call upstream the position where the probe is the closest to the shed access door. Among the 3 above positions, the only one where the NMR can lock on the dipole field is the central one as in the extreme position of the probe, the field homogeneity is not sufficient. The probe position is controlled by a linear encoder. The Z axis refers to the "beam" direction, increasing from upstream to downstream. We use three kinds of "Z":

-Zm to locate a point inside the magnet. The dipole center is at Zm=0 and the yoke ends at +-1500.mm

-Zp to locate a point inside the probe. The probe center is at Zp=0. Each of the 4 NMR probes has a Zp given in the file "magnet.dir". At a temperature of 21C, the coils are at Zp=+-1519.815mm (from magnet.dir)

-Zd to refer to a displacement of the probe w.r.t. the dipole. Zd=0 refers to the upstream (home) position of the probe. The integral measurement is performed from Zd=0.000mm (1st PDI trigger) to Zd=3199.000mm (last PDI trigger), for forward pass. Zd is given by the display (at the top of the rack) or by the master screen ("OUT").

The relationship between Zm, Zp and Zd is:

Zd-Zm+Zp=C

where C is a constant given in magnet.dir (C=1604.000 nomin.). Example of use: to have the probe center at the dipole center, one must set Zd=1604.000mm (set Zm=0 and Zp=0 in the above formula, and solve for Zd)

The integral measurement sequence is the following:

-from the current position (a priori arbitrary) move the probe upstream, up to a limit (optic) switch.

-move downstream by a few mm to cross the encoder index (encoder initialization)

-move to the central position to measure the central field by NMR, the system checks if the NMR locks and if the reading is stable, it will be the "before" field

-move back to upstream position

-move to downstream position while integrating the flux through the coil system, this measurement will be called the "forward" integral (duration $\sim$ 7s)

-move back to upstream position while integrating the flux through the coil system, this measurement will be called the "backward" integral (duration $\sim$7s)

-move to the central position to measure the central field by NMR, the system checks if the NMR locks and if the reading is stable, it will be the "after" field.

In addition to the central field, 4 probe temperatures, a local excitation current measurement, the setting of the dipoles P.S, the readback of the dipoles P.S and the probe position at NMR measurement time are recorded "before" and "after".

To perform an integral field measurement:

1-check if the system works (see "details on integral system check" below)

2-run the above integral sequence (see "details on integral run" below)

3-fix the error(s) if any (see "details on integral errors" below)

4-save the data in a file (see "details on integral data save" below)

5-analyze the data (see Arun Saha).

5.3 Details on integral run

To run the integral measurement sequence, call the arc_integral.adl medm screen, then:

-push "start" to start the full sequence

-look at the results displayed:

-after the "before" NMR measurement: the "before" data set

-after the "forward" integral pass: the forward velocity profile and the forward voltage-after-gain profile

-after the "backward" integral pass: the backward velocity profile and the backward voltage-after-gain profile

-after the "after" NMR measurement: the "after" data set

-if "BAD NMR" or "PDI saturation" flags are set, or if something is obviously wrong in the data or plots, call expert.

-data are ready to be saved (see "Details on integral data save" below)

5.4 Details on temperatures

The AC system of the shed is made of two cooling units, a heating unit and a controller connected to two temperature sensors : one located in the shed and one located in the BSY. This system is programmed in such a way that the temperature of the shed follows the BSY temperature within +-2C. The BSY temperature can be anywhere in the [18C,35C] range, regardless of the season. The BSY temperature and the shed temperature are given (in F) by a display panel located close to the workstation, on the wall. The AC system can be set in manual control by turning from "auto" to "manual" a set of switches controlling the cooling units and the heater unit. These switch boxes are located on the shed wall. If the shed temperature is above 34.4C (94F), call Arun Saha (the electronics can be damaged) and cool down the shed in manual AC mode. The 4 temperature sensors of the probe are labelled Tx+z+, Tx+z-, Tx-z+, Tx-z- depending on their position w.r.t. the following (x,z) frame:

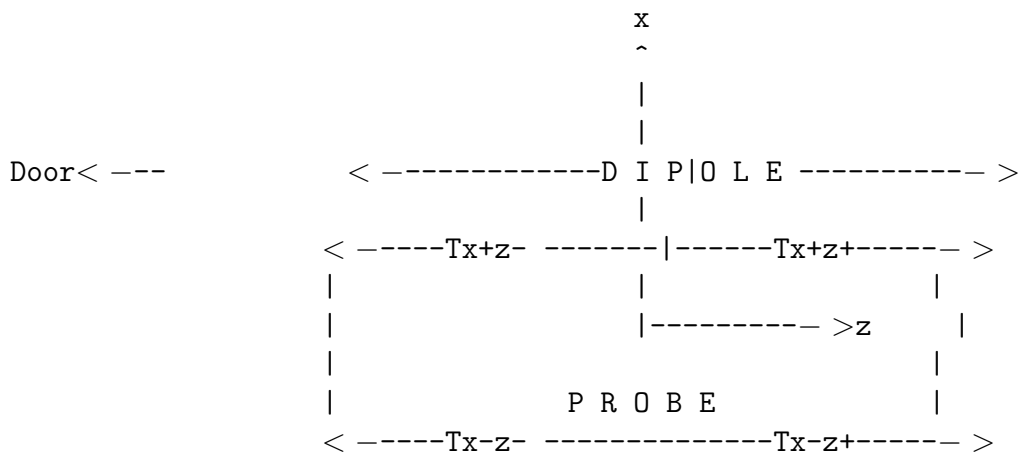

Both "x+" sensors are on the probe edge which is inside the dipole gap and both "x-" sensors on the opposite edge which is outside the dipole gap. Both "z-" sensors are at 1/4 of the long dimension of the probe and both z+ at 3/4 of this length. The average of the 4 temperatures is used by the analysis program to correct the coil distance from the thermal expansion of the probe, so it is important to make sure that the 4 sensors are working well. The user can just make sure that the temperatures displayed in arc-master.adl or recorded in arc-integral.adl are realistic. In arc-integral.adl they are given in the order: Tx+z-, Tx+z+, Tx-z-, Tx-z+ Tx-z- and Tx-z+ should be close to the shed

temperature. Tx+z- and Tx+z+ depend on the probe position, as the gap (iron yoke) is warmer than the shed and the dipole coil (at both ends of the dipole) is warmer than the iron yoke. For a probe in a central position for more than about one hour, the Tx+z- and Tx+z+ sensors should give the yoke temperature, i.e the shed temperature plus 0. to 5.C, depending on the current, LCW temperature and the magnet/shed temperature history. The 4 temperatures are also displayed inside the shed, on the electronics rack. These values are digitized by separate ADCs, so they may differ from the remote values by ∼0.1C.

5.5 Shed access and safety

For safety reasons, the access to the shed is limited to authorized persons which are listed in the ESAD and listed below. To be added to the list, ask the Hall-A leader. The standard operation mode of the integral measurement setup is the remote mode, through the network, from the counting house. In case of problem needing an access in the shed, unauthorized users must contact Arun Saha.

5.6 List of Authorized Personnel for Shed Access

Name (first,last)	Dept.	Call [4]		e-mail	Comment
		Tel	Pager		
Hall A Personnel					
Arun Saha	JLab	7605		saha@jlab.org	*Contact*
Douglas Higinbotham	JLab	7851	584-	doug@jlab.org	
Accelerator Personnel					
Michael Tiefenback	JLab	7430	438-	tiefen@jlab.org	
Yves Roblin	JLab	7105		roblin@jlab.org	
Rick Gonzales	JLab	7198	289-	gonzales@jlab.org	
Bill Merz	JLab	5836	584-	merz@jlab.org	
Mark Augustine	JLab	7103	584-	augustin@jlab.org	
Hari Areti	JLab	7187	584-	areti@jlab.org	
Pete Francis	JLab	7528	289-	francis@jlab.org	
Scott Higgins	JLab	7411		higgins@jlab.org	
David Seidman	JLab	7054		seidman@jlab.org	
Ron Lauze	JLab	7186	327-	lauze@jlab.org	
Tony Day	JLab				
Christopher Curtis	JLab	7086	438-	curtis@jlab.org	Alignment group
CEA - Saclay experts					
Pascal Vernin	CEA	OFF		vernin@jlab.org	
Christian Veyssière	CEA	9704 [19]		cveyssiere@Cea.Fr	
Francois Gougnaud	CEA				
Jacques Marroncle	CEA				

Table 5.1: Arc Energy Measurement: authorized personnel

Chapter 6

eP Beam Energy Measurement [1] [2]

6.1 Purpose and Layout

The Hall A eP system is a stand-alone device to measure the energy of the electron beam. It is located along the beamline 17 m upstream of the target. The beam energy E is determined by measuring the scattered electron angle Θ_e and the recoil proton angle Θ_p in the ^{1}H$(e, e'p)$ elastic reaction according to the kinematic formula:

$$E = M_p \frac{\cos(\Theta_e) + \sin(\Theta_e)/\tan(\Theta_p) - 1}{1 - \cos(\Theta_p)} + O(m_e^2/E^2), \tag{6.1}$$

in which M_p denotes the mass of the proton and m_e the mass of the electron. The schematic diagram of the eP system is presented in Fig. 6.1. Two identical arms, each consisting of an electron and a corresponding proton detector system, made up of a set of 2 x 8 silicon micro-strip detectors in the reaction plane, are placed symmetrically with respect to the beam along the vertical plane. The target consists of a rotating CH_2 tape. Simultaneous measurements of the beam energy with both arms result in cancellation, to first order, of uncertainties in the knowledge of the position and direction of the beam.

6.2 Description of Components

6.2.1 High Voltage

The eP system is equipped with two gas Cherenkov detectors and altogether 18 scintillators. The high voltage for the photomultiplier tubes of these detectors are provided by a LeCroy 1450 HV power supply, located in the electronics racks along the beamline. The channel assignment and HV voltages (as of summer 2003) are given in Table 6.1.

The standard way to control the high voltage is the use of the Hall A MEDM [18] graphical user interface (EPICS [14]), which runs on the hacsbc2 computer. This computer is located in the counting house, but can also be accessed from other terminals.

[1] *CVS revision* Id: ep.tex,v 1.9 2008/05/09 23:08:20 doug Exp

[2] Authors: D.Higinbotham doug@jlab.org and B.Reitz reitz@jlab.org

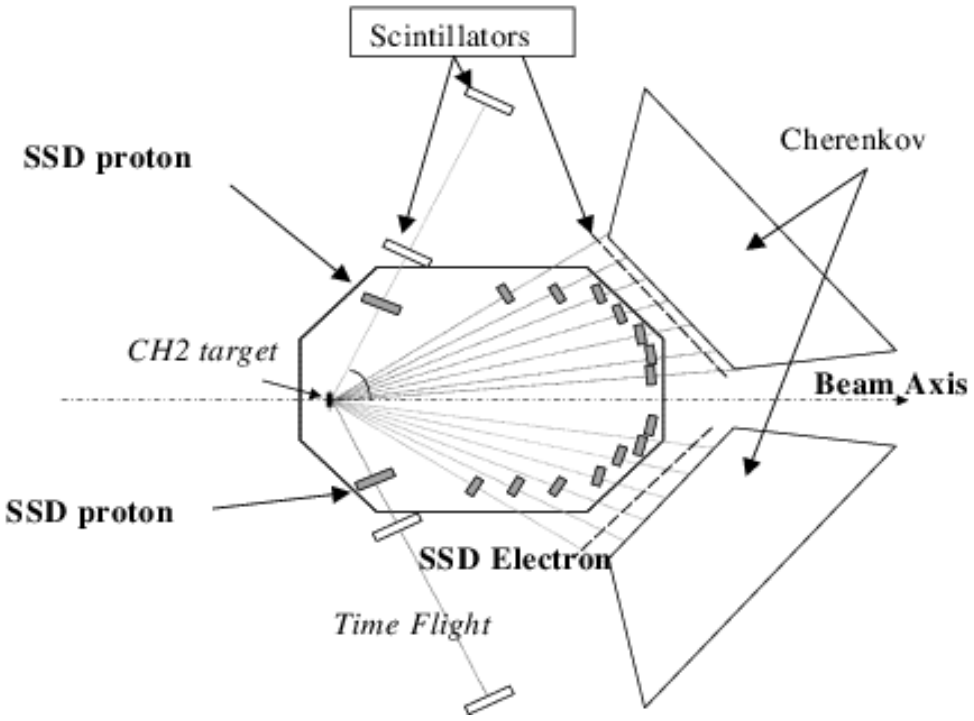

Figure 6.1: Schematic layout of the eP energy measurement system, showing the arrangement of its components, the polyethylene (CH_2) target, the Cherenkov detectors, the silicon micro-strip detectors (SSD) for protons and electrons, and the scintillator detectors.

Usually at least one terminal in Hall A itself has a MEDM screen running, as well. If it is not running, log into hacsbc2 as user hacuser, and start the GUI with the command hlamain. A screen labeled "Hall A Main Menu" will appear (Fig. 25.3). Chose LeCroy HV, and select Beamline in the screen which will pop up (Fig. 6.2).

Figure 6.2: Epics Menu for the LeCroy High Voltage supplies in Hall A. All slots related to the eP system can be accessed from the Beamline button.

Channel	HV (Volts)	Detector
1.2	2201	S1 (bottom)
1.3	2200	S2 (bottom)
1.4	1963	S1 (top)
1.5	1963	S2 (top)
1.8	1039	S3
1.9	1027	S3
2.0	2250	Cherenkov
2.1	2250	Cherenkov
3.0	1004	S3
3.1	1113	S3
3.2	1097	S3
3.3	1144	S3
3.4	1126	S3
3.5	1119	S3
3.6	1006	S3
3.7	1112	S3
3.8	1104	S3
3.9	1071	S3
3.10	1061	S3
3.11	1051	S3

Table 6.1: HV connections and HV values.

For a measurement, all HV channels defined in Table 6.1 should be turned on. The demand voltages in these slots (Slot 1, Slot 2 "(e,p) & ARC" and Slot 3 "Moller") should have the correct preset values. To turn the HV on (or off), or to change the preset values, press the button below the title of the slot. Another screen will pop-up, where status and preset values can be adjusted. (See Figs. 6.3, 6.4, 6.5, and 6.6)

During a measurement, the alarm handler should be running, so that the operator will be informed, should one of the detectors trip. This can also be done manually, by watching the beamline screen Fig. 6.3. All fields should be green and showing a voltage close to the values given in Table 6.1. If the EPICS screens are not working, there is an alternative way to control the HV, by connecting via telnet directly to the LeCroy 1450. This can be done from nearly any Linux PC in the counting house with the command: > telnet hatsv5 2011.

6.2.2 MEDM Controls

The target, the silicon micro-strip detectors, and the setting of the Cherenkov detector are controlled by an EPICS GUI (Fig. 6.7). It can be started from the "Hall A Main Menu" (Fig. 25.3) running on hacsbc2 by pressing the EP Energy Measure button. (see

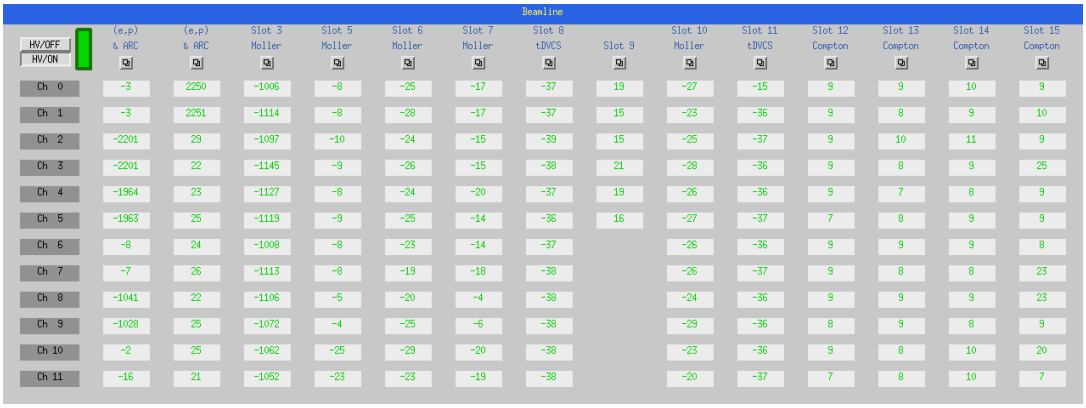

Figure 6.3: Overview screen for the high voltage status of devices belonging to the beamline instrumentation.

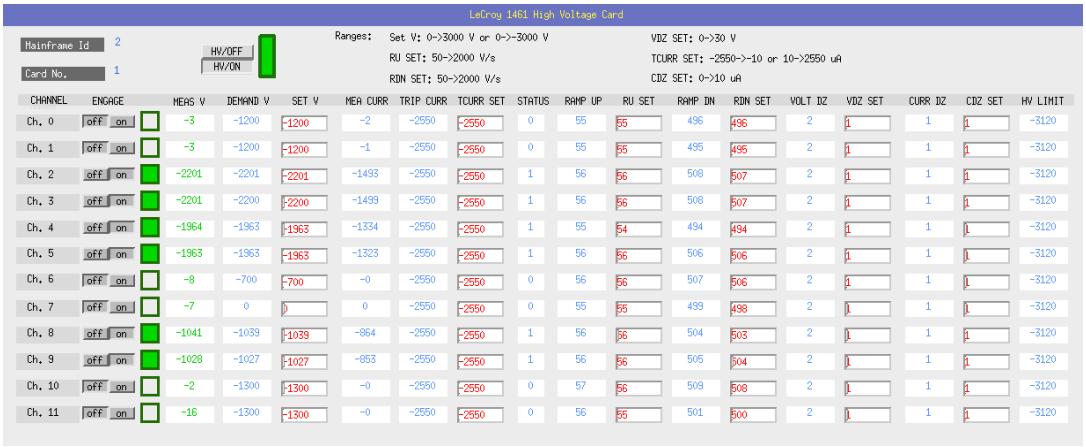

Figure 6.4: Control screen for all high voltage channels from Slot 1.

previous chapter, to learn how to start the "Hall A Main Menu" in case it is not already running) The controls actually run on a VME computer hallasc6 (Bob calls this e-p 2). It is located in the eP electronics racks along the beamline in Hall A (Fig. 6.8). This computer sometimes requires rebooting. The computer is reached through the portserver hatsv5 at port 12. To reboot:

> telnet hatsv5 2012
user: adaq
password: *******

if you do not see a prompt, press Ctrl C.

-> reboot

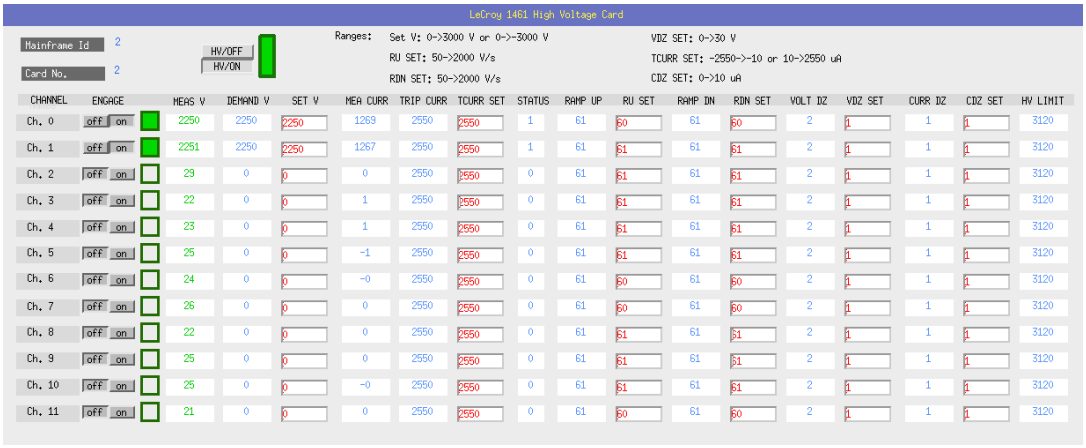

Figure 6.5: Control screen for all high voltage channels from Slot 2.

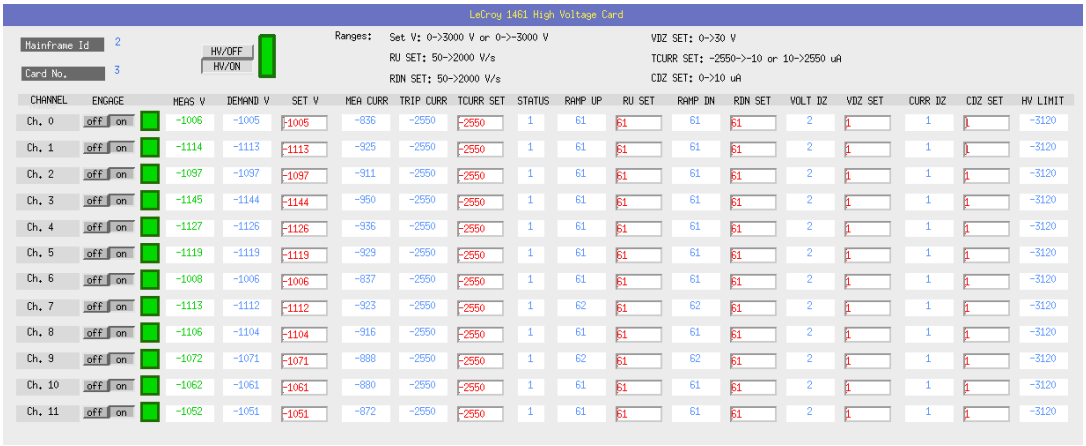

Figure 6.6: Control screen for all high voltage channels from Slot 3.

wait for it to finish and then load EPICS:

```
-> < epics
...
-> Ctrl ]
telnet> q
>
```

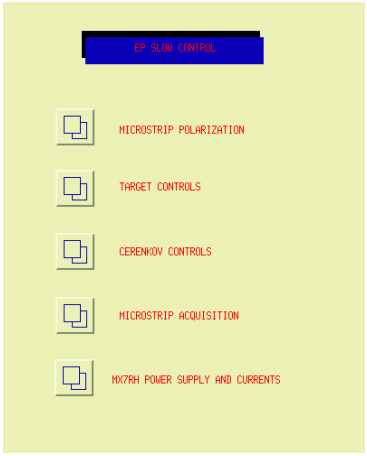

Figure 6.7: EPICS main screen for the controls of the various devices in the eP system.

6.2.3 Silicon Micro-Strip Detectors

There are three GUI's associated with the silicon micro-strip detectors. Two of them are important for everyday operations. They are labeled MicroStrip Polarization and MX7RH Power Supply and Currents. To operate the SSDs, pull up the micro-strip polarization display and turn on all the bias voltages (see Fig. 6.9). Make sure that the bias voltages are set to a reasonable value (30 Volts). Pop up both current strip charts so that you can see when the currents have stabilized. Pull up the MX7RH display and turn on all the supply's (see Fig. 6.10). Pop up the power supply strip charts. It takes at least 30 minutes for the strips to stabilize.

6.2.4 Target

The target of the eP system is made of a thin polyethylene (CH_2) tape, which moves while it is in the electron beam. To operate the target one has to pull up the target GUI (Fig. 6.11). There are two controls, one to start the target moving labeled Motor Control and another labeled Target Motion to place the target in the beam. The CH_2 tape must always be moving before it is placed in the beam. There are two monitors of the tape motion: an output that shows the motor is powered and a diode-pin combination that triggers on a reflective strip. The diodes are often damaged.

Always make sure, that the target is moving while it is in the beam !!!

The target movement and motion can also be controlled locally. The control box is located under the beamline next to the eP system (see Fig. 6.12.)

If you operate the target manually, make sure that the system is set back to remote control afterwards.

The CH_2-tape has only a limited life time. Therefore it should be replaced on a regular basis (twice per year, or before a long beam time). This work must be done by the Hall A technical staff.

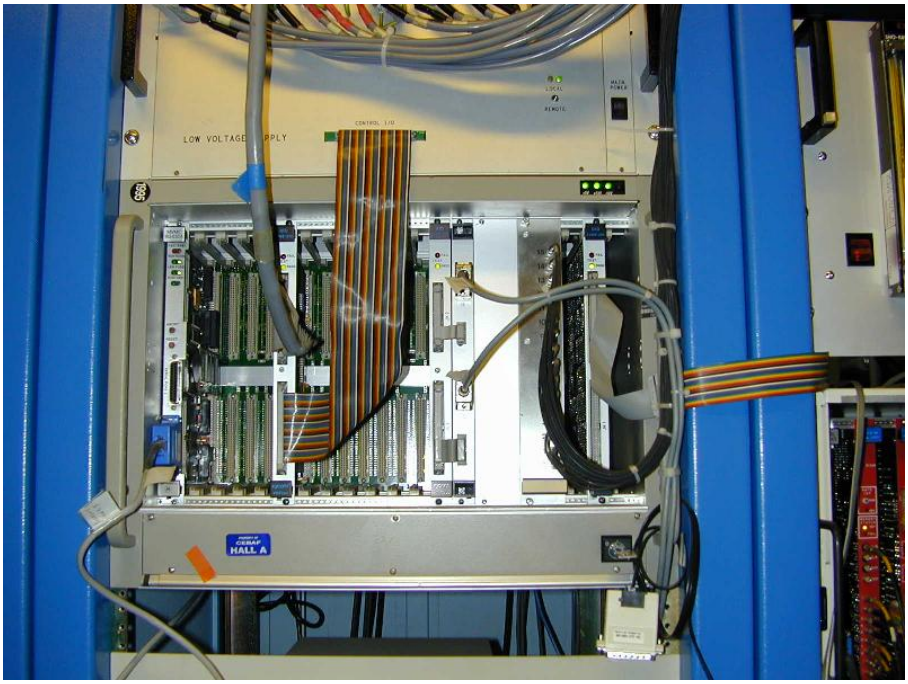

Figure 6.8: VME crate containing modules for the slow controls of the eP system.

6.2.5 Cherenkov

The detectors for the protons (the scintillators S1 and S2, and a silicon micro-strip detector) are installed at a fixed angle of 60°. Therefore the scattering angle of the electron varies between 9° and 40° depending on the beam energy. There are seven mirrors in each arm, covering the full angular range, but only one photomultiplier tube per arm, which only looks at one mirror at a time. Depending on the beam energy the PMT has to be rotated to see the corresponding mirror. This movement is controlled by the Cherenkov GUI (see Fig. 6.13). To change the setting, pull up the Cherenkov GUI and enter the desired energy in MeV into the widget. One arm at a time will move. After the first PMT is in position you must re-enter an energy that is 1 or 2 MeV different in order to move the second PMT. This is a rather slow process, and can take several minutes.

The Cherenkov detector is filled with pure CO_2-gas. A schematic of the gas system is shown in Fig. 6.14, a picture of the gas-controller in Fig. 6.15. The gas-controller is located in the same rack as the DAQ system. This rack is located in Hall A next to the beamline. When performing an eP measurement, the gas system should be in Pressure-mode. Therefore the left rotary switch should be at PRESSION and the right one at FERME. The two digital displays should both indicate a pressure of roughly 10.0 mbar, and the two flow-meters should be at zero. However the flow regulator under the left flow meter must be open. In this mode the system is pressurized, if the pressure falls below 10 mbar the automated valve on the gas inlet side opens, until the pressure is restored.

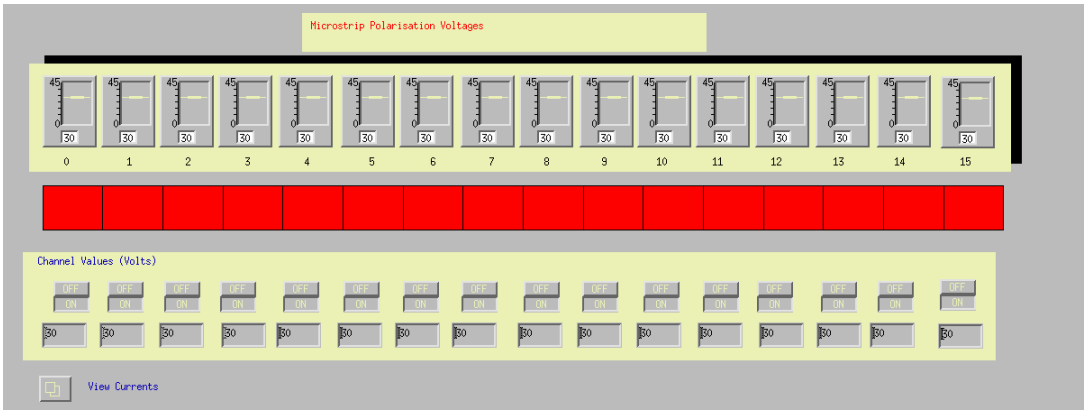

Figure 6.9: EPICS screen to control the bias voltages for the silicon micro-strip detectors.

On the other hand, if the pressure rises above 15 mbar, the automated valve in the exit pipe opens, to release pressure.

If the gas Cherenkov detector must be opened, one should turn down the gas flow on the regulator beneath the left flow meter and open the exit valve (right switch, OUVERT). After the work on the detector is finished, and the volume is closed again, the detector must be set in Flow Mode. The left rotary switch must be in the DEBIT and the right one in the OUVERT position, the gas flow regulator must be opened. After the detector is purged for a sufficient time, one should switch back to the Pressure-mode, and verify that a pressure of 10 mbar is restored. The CO_2 is supplied by the Hall A gas system, which also supplies the Cherenkov detectors in the HRS with CO_2. The cylinders and the main valve (operated manually) are located in the gas-shack.

6.2.6 Data Acquisition

The data acquisition (DAQ) is runs on adaqep in the epmeas user account. It is a standard CODA 2.2 system. The DAQ system also downloads and initializes logic modules, and thresholds of discriminators. Since these settings depend on the beam energy, they have to be configured individually for each measurement. The DAQ hardware itself is located in two racks along the beamline in Hall A (see Figs. 6.16, 6.16, and 6.18).

6.2.6.1 Trigger-configuration

Before data taking can start, a trigger file appropriate for the nominal beam energy must be created. This file (settings.conf) insures that the trigger MLU is programmed correctly. You have to be logged into adaqep as user epmeas. There you have to change to the correct directory (use goconf) and run a short program (trigger) to generate the trigger file. An example is shown in Fig. 6.19. Make sure that you give the beam energy in MeV. The file is read in by CODA during the PRESTART.

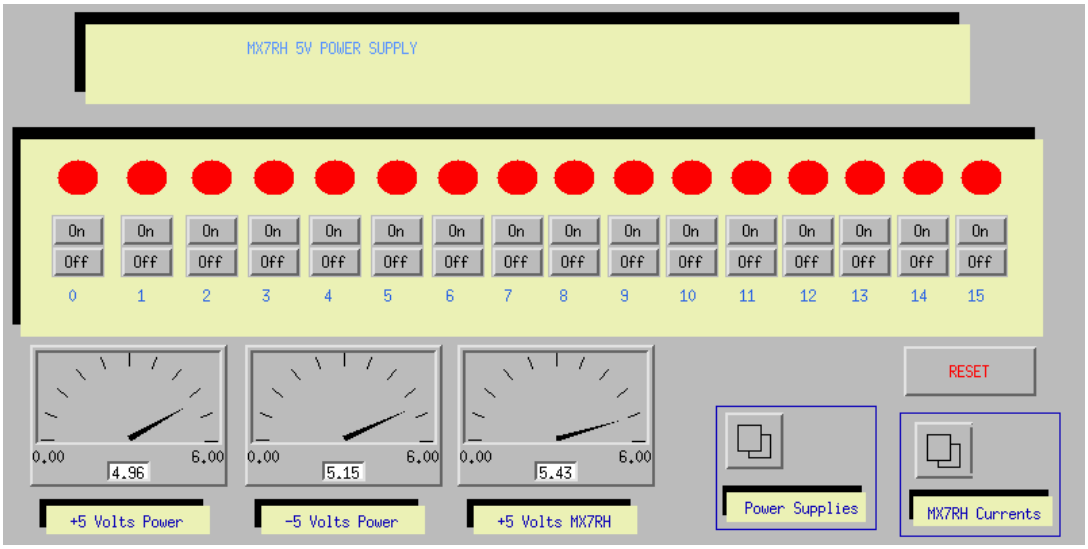

Figure 6.10: EPICS screen for the MX7 power supplies.

6.2.6.2 Rebooting Acquisition-VME

The DAQ system utilizes a VME computer as its Readout Controller (ROC). This computer is designated hallasc15 and can be accessed from the portserver **hatsv5** at port 2. To reboot it, use the following procedure:

epmeas@adaqep.jlab.org> telnet hatsv5 2002
user: adaq
password: ********

if you do not see a prompt, press: Ctrl C

-> reboot
-> Ctrl]
telnet> q
epmeas@adaqep.jlab.org>

If the reboot fails, or if CODA afterwards still does not work, check that the ROC is configured for CODA 2.2. Therefore one has to interrupt the reboot by pressing the any-key. Press p to show the present setting, it should look as follows:

boot device : ei
processor number : 0
host name : adaqs3-ep.jlab.org

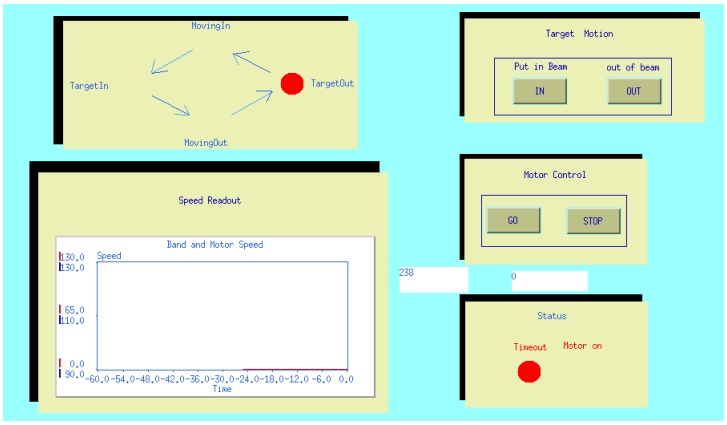

Figure 6.11: EPICS screen for the MX7 power supplies.

file name : /home/epmeas/vxworks/vx162lc-8MB
inet on ethernet (e) : 129.57.188.14:ffffff00
inet on backplane (b):
host inet (h) : 129.57.164.45
gateway inet (g) : 129.57.188.1
user (u) : epmeas
ftp password (pw) (blank = use rsh):
flags (f) : 0x20
target name (tn) : hallasc15
startup script (s) : /home/epmeas/vxworks/epmeas_22.boot
other (o) :

Press c to change these settings and reboot the ROC by pressing @ afterwards.

6.2.6.3 Running CODA

To run CODA, you must be logged into adaqep as user epmeas. From the prompt CODA can be started with the command runcontrol. Withing CODA you click on Configure and choose configuration epm1, then click on Download, and finally on Prestart. At this point the information in the settings.conf file, that controls the acquisition (thresholds, discriminator widths, and trigger MLU logic) is downloaded to the hardware and spooled to the diagnostics window. This provides an opportunity to check this information.

The actual data taking starts after pressing Go. The rate is usually rather low, below one per second. However if after a few minutes the number of events is not increasing, one has to verify if:

- the trigger is programmed correctly,
- all components of the DAQ are running,

Figure 6.12: Control box for the eP target system.

- the Cherenkov is at the correct position,
- the target is in the beam and moving.

After collecting enough data, the End button should be used to end data-taking, and to ensure that all data is written into the datafile.

6.2.7 Data Analysis

The data analysis is currently done in two steps, using two different programs. Both run on adaqep in the epmeas account.

In the first step, the CODA raw file is converted into an ASCII file. For this part of the analysis one has to change to the epcoda directory, which can be done by typing goep, and start the program eplong:

```
epmeas@adaqep.jlab.org> goep
epmeas@adaqep.jlab.org> eplong
How many events (-1= lots) ?
-1
```

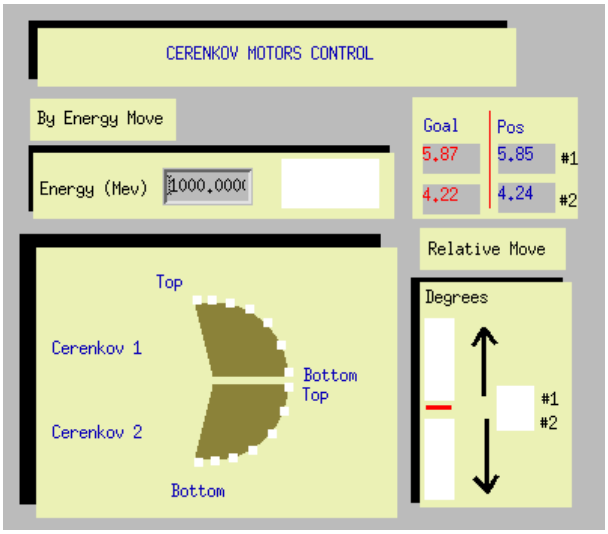

Figure 6.13: EPICS control screen for the Cherenkov detector. User input is only possible for the beam energy. Be aware that only one detector at a time is moved.

What file name ?
epmeas02_###.dat
What output filename ?
###
opening/adaqep/data1/epraw/epmeas02_###.dat

Have opened epmeas02_###.dat

bank length is wrong
bank length is wrong
Finished; events read = 234
epmeas@adaqep.jlab.org>

In this example ### is the three-digit CODA run number. eplong can be started, while CODA is still taking data for that run.

The second step of the analysis utilizes a stand-alone analysis code, which asks for nominal beam energy, beam position, beam intensity and duration and uses the output of eplong. One has to change into the ep directory and start the code:

epmeas@adaqep.jlab.org> cd
epmeas@adaqep.jlab.org> cd ep
epmeas@adaqep.jlab.org> ep

Make sure, that the nominal beam energy is given in **GeV**. The program prints the

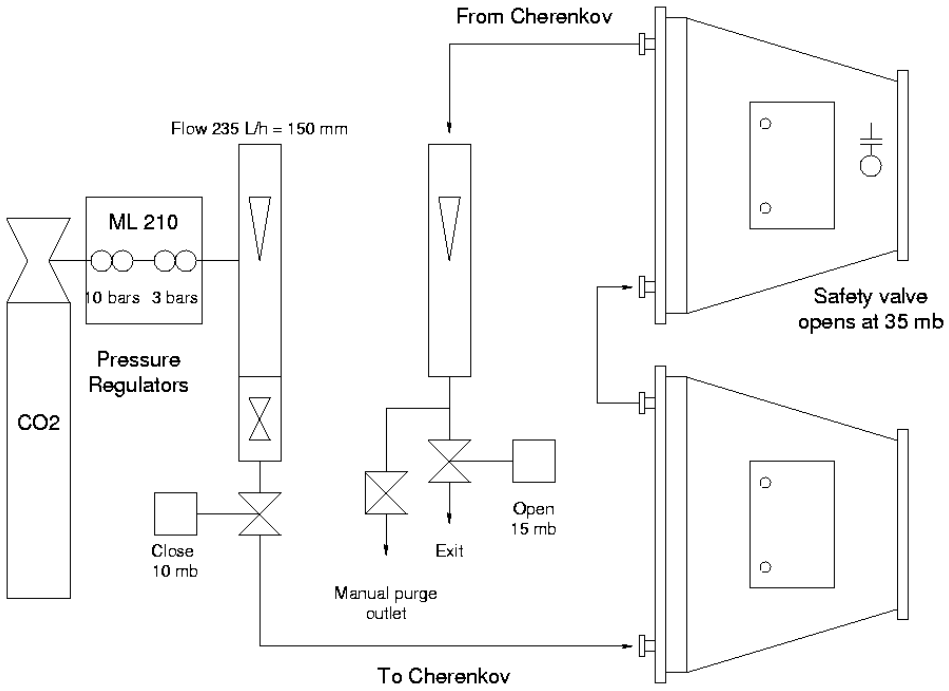

Figure 6.14: Scheme of the gas system for the two carbon dioxide gas Cherenkov detectors.

result for the energy, together with the path and name for log-files and ntuple files. It is recommended that you repeat the analysis with a slightly changed nominal energy value or with slightly changed cuts, to verify that the automatic fitting procedure does really find the eP events, and does not trigger on noise. Be aware also, that one needs elastic events in both arms to get a reliable results. Furthermore, for beam energies between 2.7 GeV and 3.4 GeV, where micro-strip detector E_3 is used, the obtained values are systematically shifted as compared to the results from the ARC energy measurements, probably due to a misalignment of this detector.

6.3 Operating Procedure

In preparation of an eP measurement, the mirrors of the Cherenkov should be driven to the appropriate position (see Sec. 6.2.5), and the silicon micro-strip detectors should be turned on (see Sec. 6.2.3). These two measures should be started several hours before the actual eP measurement is scheduled.

Shortly before the measurement, the high voltages for the scintillator photomultiplier tubes and for the Cherenkov photomultiplier tubes muat be turned on (see Sec. 6.2.1). Finally the DAQ should be prepared (see Sec. 6.2.6).

For the eP measurement, the following requirements muat be communicated to

Figure 6.15: Picture of the gas controller of the eP gas Cherenkov detectors.

MCC:

- 3-4 μA CW beam
- Raster OFF
- OTR target 1C12 OUT
- Physics target empty (or be able to stand unrastered, uncentered beam)
- Centered on BPM 1H01 absolute
- Fast Feedback must be ON

To check the beam position (recommended!), you can use the Monticello screen from MCC, which is usually also available on one monitor in the Hall A counting house. On the Monticello main menu select BPM, and there click on BPM Spikes and Position Summary. This will pop up a new screen, go to the top row of this screen ("Injector, BSY, Hall A, B and C Transport") and select Pos Sum. From here select Hall A Transport. A screen will show up, which summarizes beam positions at various locations. For the eP system the numbers in BPM 1H01 absolute are the only ones relevant.

When MCC has established those conditions, the high voltages and the micro-strip detectors should be checked one more time. Next the eP target tape motion should

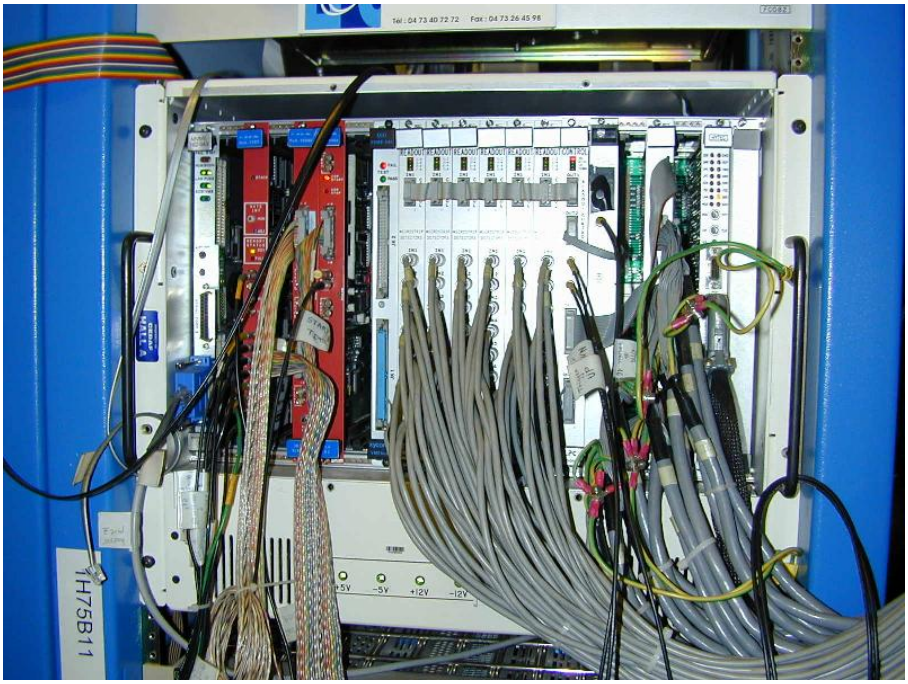

Figure 6.16: VME crate for the eP data acquisition.

be turned on (Motor Control) and then the target can be moved into the beam (Target Motion, see Sec.6.2.4.)

Now the actual data-taking can start, by pressing Prestart/Go in the CODA runcontrol screen. The rate should be a few tenth of a Hz. If the BPM position changes, the fast feedback system fails, or a lot of beamtrips accrue, consider stopping the run and starting a new one.

One should analyze the data, while CODA is still running. With a hundred events one can already check the quality of the data, and estimate how much more statistics are needed. Typically one needs 40-50 minutes of stable beam or a few hundred events.

After data taking is finished, and it is verified, that there is a sufficient number of events to extract a number for the beam energy, the following steps should be taken:

- eP target: should be moved out of the beam
- eP target: motor should be turned off (after it is moved out)
- MCC can restore the beam needed for the experiment:
  - restore beam position at target
  - restore raster
  - insert OTR 1C12, if needed for the experiment
  - restore beam current

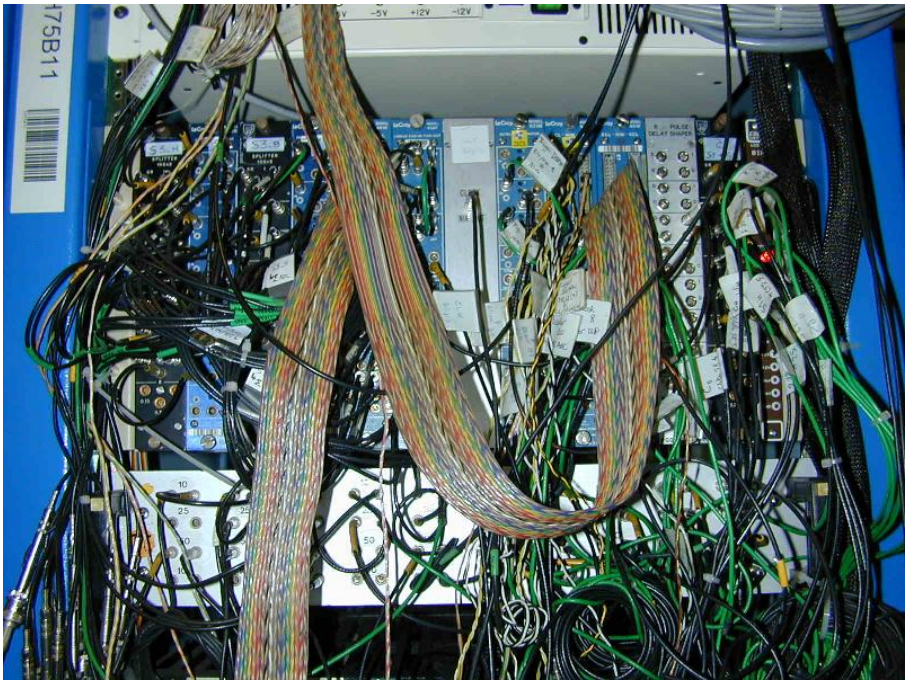

Figure 6.17: NIM bin for the eP data acquisition.

- Shift workers can go back to physics target
- high voltages for eP scintillators and eP Cherenkov should be turned off
- MX7 power supplies and micro-strip bias voltages should be turned off
- CODA windows should be closed
- remaining windows from the epmeas account should be closed

Before posting the result of the eP measurement, one should make sure, that the full statistics of the run is analyzed, that the result is independent of the chosen cuts, and that there are events on both arms of the eP system.

6.4 Maintenance

The CH_2 tape of the eP target should be replaced on a regular basis (twice per year, or before a long beam time). This work involves opening the eP scattering chamber and therefore breaking the vacuum in this section of the beamline. This work must be coordinated by the Hall A work coordinator, and can only be done by the Hall A technical staff personnel.

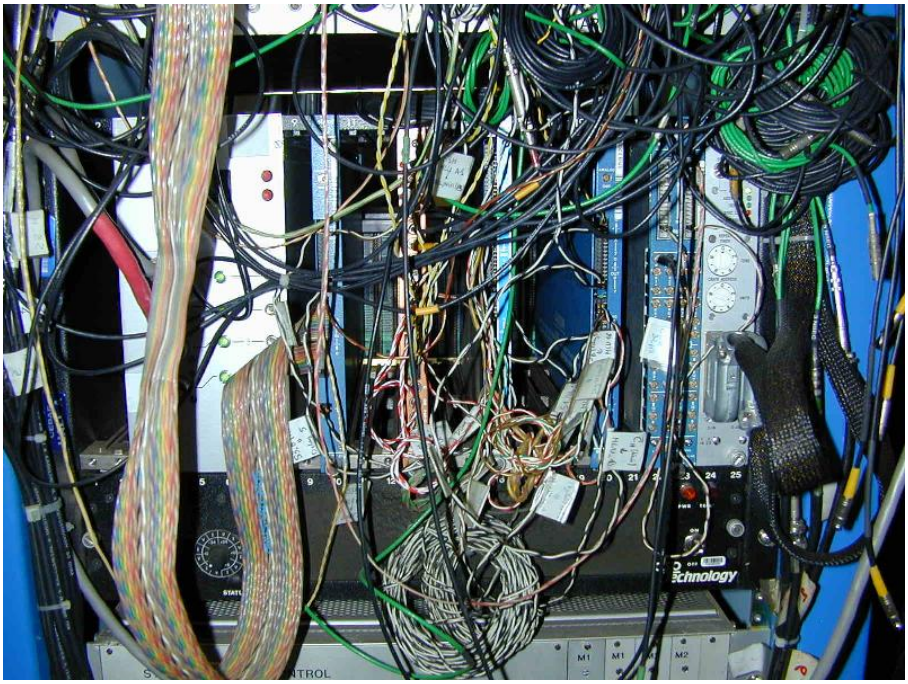

Figure 6.18: CAMAC crate for the eP data acquisition.

6.5 Safety Assessment

6.5.1 High Voltage

The LeCroy 1450 HV crate equipped with LeCroy 1461N high voltage cards provides up to 3 kV of low current power. RG-59/U HV cables, certified for up to 5 kV, with standard SHV connectors are used to connect the power supply to the photomultipliers. The PMTs for S1,S2 and for the Cherenkov detector are usually operated at 1900 - 2300 V and draw up to 1.5 mA currents. The PMTs for the S3 scintillators are operated at 1000 - 1150 V, drawing 0.9 mA current. The high voltage MUST be turned off during all work on the detector.

6.5.2 Silicon Micro-Strip Detectors

The SSD are prone to radiation damage, regardless if they are turned on or off. Ion chambers next to the eP measure radiation levels in this part of the beamline and interrupt beam delivery via the fast shutdown system (FSD), in case the levels are not acceptable. Therefore these ion chambers should never be masked.

6.5.3 Target

The target is controlled by the experimenters, not by MCC. Therefore it is the responsibility of the eP operator to ensure that it is properly operated. To avoid damage to the eP target, the following instructions must be followed:

- The target should only be in the beam during an eP measurement
- Before inserting the target into the beam, the tape motion must be turned on. The target should not be in the beam when the tape is not moving.
- The target should not be in the beam if the beam current is greater than 5 μA.
- After finishing the eP measurement, the target should be moved out of the beam, and then the tape motion stopped.
- The tape should not run, and the target should not be in the beam without an eP operator being present.

6.5.4 Cherenkov

If for work on the Cherenkov detector the detector must be opened, the CO_2 gas flow must be stopped. After the work is finished the detector must be purged and later the operating mode must be restored. (see Sec. 6.2.5)

6.6 Authorized Personnel [3] [4]

The list of the presently authorized personnel is given in Table 6.2. Individuals must notify and receive permission from the Hall A work coordinator (see Table 6.2) before working any beamline part of the system.

Name (first,last)	Dept.	Call [4]		e-mail	Comment
		Tel	Pager		
Douglas Higinbotham	JLab	7851	584-	doug@jlab.org	*Contact*
Ed Folts	JLab	7857		folts@jlab.org	Work Coordinator
Jack Segal	JLab	7242		segal@jlab.org	Gas System
Todd Ewing	JLab	6097		jtewing@jlab.org	CH2 Targets
Scot Spiegel	JLab	5900	584-	spiegel@jlab.org	CH2 Targets

Table 6.2: eP System: authorized personnel

[3] *CVS revision* Id: ep-personnel.tex,v 1.5 2008/05/09 23:08:11 doug Exp
[4] Authors: D. W. Higinbotham doug@jlab.org

```
epmeas@adaqep.jlab.org> goconf
epmeas@adaqep.jlab.org> trigger
  Do you want to process a DIODE run? (y/n)
n
  Do you want to process a 1 photo-e Cerenkov peak? (y/n)
n
  Beam energy in MeV/c :
1000


  Results of your calculation is in file ---> dE.resu

  ----- EP run -----


  Threshold values by default :
    C_H  .... threshold =  60.0 mV  or  DAC =  10
    S1_B .... threshold = 120.0 mV  or  DAC =  20
    S2_B .... threshold = 120.0 mV  or  DAC =  20
    C_B  .... threshold =  60.0 mV  or  DAC =  10
    S1_H .... threshold = 120.0 mV  or  DAC =  20
    S2_H .... threshold = 120.0 mV  or  DAC =  20
    S3_H .... threshold = 150.0 mV  or  DAC =  26
    S3_B .... threshold = 150.0 mV  or  DAC =  26

  Do you want to change 1 threshold? (y/n)
n
    C_H  .... threshold =  61.6 mV  or  DAC =  10
    S1_B .... threshold = 119.0 mV  or  DAC =  20
    S2_B .... threshold = 119.0 mV  or  DAC =  20
    C_B  .... threshold =  61.6 mV  or  DAC =  10
    S1_H .... threshold = 119.0 mV  or  DAC =  20
    S2_H .... threshold = 119.0 mV  or  DAC =  20
    S3_H .... threshold = 147.6 mV  or  DAC =  26
    S3_B .... threshold = 147.6 mV  or  DAC =  26

  Discriminator widths are :
          A Outputs (ns) :  70
          B Outputs (ns) :  30
  Do you want to modify them (y/n) ?
n

  TRIGGER is : S1 .AND. S2 .AND. S3 .AND. C

  Do you want to change it (y/n)?
n


  Timing, dE/dX... results  are in : dE.resu
  New settings data for EP trigger are in : settings.conf

    +-----------------------------------------------+
    | The new setting file generated is : settings.conf |
    | Rq : this is this new file which will be used for |
    |      the next data taking!!!                  |
    +-----------------------------------------------+

epmeas@adaqep.jlab.org>
```

Figure 6.19: Example for the generation of a trigger configuration file.

Chapter 7

Target Chamber [1] [2]

The cryo-targets and the waterfall targets (see Sec. 10) are contained in a special target chamber which is a large evacuated multistaged can. So far, three chambers have been designed:

1. a chamber used up to 2003;
2. a chamber designed for use with septum magnets, starting in 2003;
3. a chamber designed for use with the BigBite spectrometer.

Here, chamber 1 is described. Chambers 2 and 3 are only different in size and slightly in shape. The safety considerations fully apply to chambers 2 and 3. The chamber was designed to isolate the beam line vacuum from each HRS so that each HRS could rotate around the target without vacuum coupling and without jeopardizing certain desired kinematic and acceptance specifications of both high resolution spectrometers needed for approved experiments. It was also designed to simultaneously contain a liquid or gas target and an array of water cooled thin metallic foils, both remotely controlled and also be adaptable for the waterfall target. The desired kinematic specifications that were considered included momentum and energy resolution in both arms, angular range of spectrometers, angular acceptance, and luminosity. The chamber vacuum is isolated from the HRS by using thin aluminum foils.

The target chamber is designed so that each spectrometer will have continuous coverage in the standard tune from θ_{min} =12.54° to θ_{max} =165°. The aluminum window is 6 *in* high and 0.016 *in* thick made of 5052 H34 aluminum foil. The foil forms regularly spaced vertical ridges when placed under load. The window had an inter-ridge spacing of 3 inches. If the window is treated as a collection of smaller rectangular windows which have the full vertical height of 6 inches and the inter-ridge spacing as a width, then stress formulas predict that the 0.016 *in* material would reach ultimate stress at a pressure higher than 35 PSID (for both over-pressure and under-pressure). There is a gate valve between the scattering chamber and the beam entrance (exit) pipe. Both valves will be closed automatically in the event that the chamber vacuum begins to rise and an FSD

[1] *CVS revision* Id: tgtcham.tex,v 1.11 2005/04/04 22:27:25 gen Exp

[2] Authors: ?? ??@jlab.org

will be caused (this is done via a relay output of the scattering chamber vacuum gauge). If either valve is closed an FSD will result.

The target chamber is supported by a 24 *in* diameter pivot post secured in concrete, rising about 93.6 *in* above the Hall A cement floor. The Hall A target chamber consists of an aluminum middle ring, a stainless steel base ring, each with a 41.0 *in* inner diameter, and a stainless steel cylindrical top hat with 40 *in* inner diameter to enclose the cryotarget and secure the cryogenic connections.

When the scattering chamber is under vacuum, there is a potential danger of window rupture. The loud noise from the rupture could hurt one's ears if not protected. Therefore when the chamber is under vacuum, protective covers are put on if possible. These must be taken off for data taking. For restricted access, the protective cover is required to be on when the chamber is under vacuum. Before switching from controlled access to restricted access, the protective cover is required to be installed. Anytime that the scattering chamber is under vacuum, the pivot area is enclosed in a rope or tape barrier and a warning sign is posted. Hearing protection is required in the enclosed area.

The aluminum ring with an outer diameter of 45.0 *in* and wall thickness 2.0 *in* is necessary for a sturdy support structure and to permit machining of the outside surface to accommodate the flanges for fixed and sliding seals mounted on opposite sides of the ring that vacuum connect the chamber to each HRS. The height of the aluminum ring shown is 36.0 *in*, which is designed to accommodate the mounting flanges. The stainless steel base ring is 11.50 *in* in height with one pump-out 6 *in* diameter port and with seven 4 *in* viewing and electrical feed-through ports. The base ring will also contain support mechanisms for the solid target ladder assembly, a rotisserie for collimating slits, radiators, and magnetic fingers for removing the solid target vacuum-lock can. The total height of the top ring, middle ring, and base ring is 93.81 *in*. This length is partly determined by our desire to include with the cryogenic extended target a solid target vertical ladder secured in an inverted hat through a hole in the base of the chamber.

The base ring includes an end plate through which the inverted hat will be adapted to fit into the large vertical pipe serving as the pivot post for the Hall A spectrometers.

The stainless steel cylindrical top hat has 40.0 *in* inner diameter, and is 0.375 *in* thick and 46.31 *in* high , which is necessary to permit the cryotarget to be withdrawn and to make space available to expose the solid targets to the electron beam.

The 200 μA electron beam, focused to a $\sim 0.1\,mm \times 0.1$ mm spot and rastered ± 5 mm horizontally or vertically on the target, enters through a oval hole in the middle ring which is 2.06 *in* wide and exits through a 1.81 *in* hole connected to the exit pipe.

7.1 Target Chamber - Spectrometer Coupling

The aluminum middle ring will support a flange on each side for each high resolution spectrometer. Four flanges will be available: Two flanges will contain a 6 *in* window opening which will be covered with a thin foil (e.g., 10 mil aluminum) . These two flanges will be used for experiments utilizing extended targets that do not require optimum momentum resolution. The other two flanges will have two fixed ports (with a 8 *in* $\times$ 6

in opening) which will be mainly used for calibration of the spectrometers . Fixed ports are centered at 16.11 ° and 45 ° for one flange and at 16.11 ° and 90 ° for the second flange.

For a point beam on target a vertical opening in the walls of the chamber of height 57.15 cm x 0.065 x 2 = 7.43 cm is required so that the scattered beam is within the full acceptance of the spectrometer. If the beam is rastered on target ±0.5 cm in the vertical direction, then the opening in the outer side of the chamber must be at least 8.5 cm for full acceptance.

From consideration of the angular range of the spectrometers in the standard tune, the scattered beam acceptance envelope, the effects of an extended gas target on acceptance, and the effects of a rastered beam ± 5 mm on acceptance, the target chamber requires a window of at least 8.5 cm high in the aluminum ring extending from 6.33 ° (2.48 in) from the beam exit point to 8.83 ° (3.47 in) from the beam entrance point on one side and a similar window on the other side of the beam. For future considerations (e.g., using a third arm or sliding seal) the width of the window on the middle ring was actually constructed to be 17.78 cm (7 *in*).

7.2 Stress Analysis of the Middle Ring

Since the middle ring has an extensive cut across the midplane on both sides as well as entrance and exit holes and loaded with about 25,000 lbs, calculations of the stresses and deformation of the midplane support area of the middle ring and deflection of the window opening were made using the finite element analysis code ANSYS . The work was conducted by a graduate student in the Department of Civil Engineering at the University of Virginia and a REU student. A scaled down model of the middle ring was constructed and then tested by applying forces to it using the Materials Testing Service of the Department of Transportation at the University. ANSYS was first checked by comparing calculations of the test model deflections to the actual data. Agreement was within ±10%. Results of ANSYS for the target chamber showed that the maximum deflection of the opening of the window in the middle ring varied from 0.007 *in* to 0.015 *in* depending on how the middle ring was loaded. This was decided to be a safe limit. In the final design, several movable 7 *in* long, 2 *in* diameter aluminum support rods are placed in the window for added support. In addition, flanges defining the ports and coupling to the spectrometers can be added, giving additional support to the middle ring. Compressional stresses, calculated using ANSYS assuming the middle ring was attached to the top hat and loaded with 25,000 lbs, were less than 3000 psi almost everywhere. However, stresses over small areas rose to levels 6000 psi near the entrance and exit holes. These calculations indicated that we did not exceed the safety limit of 15,000 psi for aluminum. A simple model calculation shown in Appendix A gives the result 1434 psi, which represents some average value over the midplane contact area.

7.3 Vacuum Pumping System

The vacuum in the target chamber is maintained by an Alcatel (880 l/s) turbomolecular vacuum pump. The pump is connected to a 6 *in* port in the stainless steel ring between $130\ ^\circ \leq \theta_p \leq 180^\circ$. The vacuum pump is fastened to a horizontal pipe connected to the chamber. The vacuum pressure in the chamber is about 10^{-5} mm. An additional Alcatel pump connected to an 8 *in* port should be added to obtain lower vacuum. Both pumps may be isolated from the target chamber using gate valves which are remotely operated from the vacuum control rack and interlocked to the FSD system.

A 2 *in* all metal gate valve is located between the entrance flange to the chamber and the beam profile monitor. An additional gate valve is located 2 m downstream of the target chamber to isolate the chamber from the exit beam pipe.

7.4 Safety Assessment

The scattering chamber is typically a low maintenance item but it is a vacuum system and hence problems may occur. The day to day operations of the cryogenic targets are managed by the Hall A Staff while major maintenance operations are handled by the Cryogenic Target Group (Physics Division). Occasionally the cryogenic targets experience difficulties due to failures of the End Station Refrigerator which supplies the coolant. In these cases the Cryogenics Group of the Accelerator Division should be contacted.

The target chamber may pose several hazards:

1. **Rupture of vacuum windows**. This hazard is mitigated by lexan guards on the vacuum windows, installed by the hall technicians either at the beginning of a "restricted access" period (see Sec.3.1), or during "control access", in case an access to the target chamber area is needed. Installation and removal of the guards is included in the technician's checklists. When the chamber is under vacuum, it is mandatory to use ear protection in the chamber vicinity. The appropriate signs must be installed by the technicians.
2. **Induced radioactivity**. The RADCON surveyor measures the level of induced radiation as a part of the general survey and may declare the target area as "High Radiation Area", installing a rope protection around [5].

Some other safety issues are discussed in the cryo-target chapter (see Sec. 11.3) and also in the polarized target chapter (see Sec. 12.1).

7.5 Authorized Personnel

Name (first,last)	Dept.	Call [4]		e-mail	Comment
		Tel	Pager		
Tech-on-Call	Hall-A	W.B.			*Contact*
Ed Folts	JLab	7857		folts@jlab.org	
Dave Meekins	JLab	5434	449-	meekins@jlab.org	Target group
Jian-Ping Chen	JLab	7413	584-	jpchen@jlab.org	

Table 7.1: Target chamber: authorized personnel. "W.B" stands for the white board in the counting house.

Chapter 8

Møller Polarimeter [1] [2]

8.1 Purpose and Layout

The Hall A beam line is equipped with a Møller polarimeter whose purpose is to measure the polarization of the electron beam delivered to the hall.

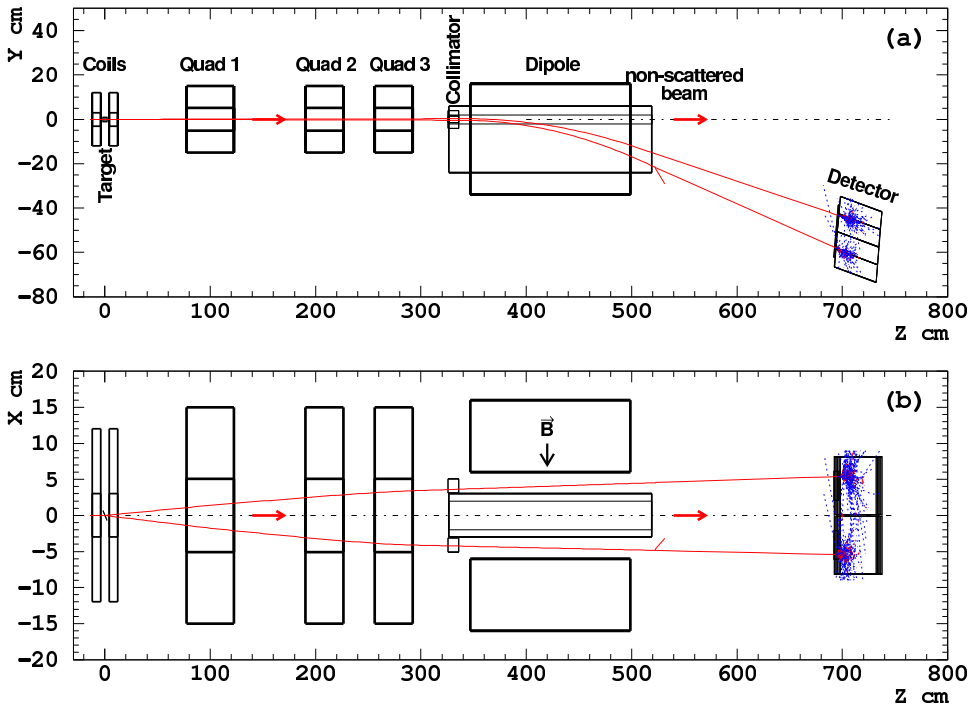

Figure 8.1: Layout of Møller polarimeter. The origin of the coordinate frame is at the center of the polarimeter target, which is 17.5 m upstream of the Hall A target.

[1] *CVS revision* Id: moller.tex,v 1.14 2011/01/13 14:55:09 gomez Exp

[2] Authors: E.Chudakov gen@jlab.org

The Møller polarimeter consists of (see Fig.8.1):

- a magnetized ferromagnetic foil used as a polarized electron target, placed 17.5 m upstream of the central pivot point of the Hall A High Resolution Spectrometers;
- a spectrometer consisting of three quadrupole magnets and a dipole magnet, used to deflect the electrons scattered in a certain kinematic range towards the Møller detector;
- a detector and its associated shielding house;
- a stand alone data acquisition system;
- off-line analysis software which helps to extract the beam polarization from the data immediately after the data are taken.

The beam polarization is measured by measuring the difference in the counting rates for two beam helicity samples.

There are also external resources of information[3].

8.2 Principles of Operation

The cross-section of the Møller scattering $\vec{e^-} + \vec{e^-} \rightarrow e^- + e^-$ depends on the beam and target polarizations $\mathcal{P}^{beam}$ and $\mathcal{P}^{target}$ as:

$$\sigma \propto (1 + \sum_{i=X,Y,Z} (A_{ii} \cdot \mathcal{P}_i^{targ} \cdot \mathcal{P}_i^{beam})), \tag{8.1}$$

where $i = X, Y, Z$ defines the projections of the polarizations. The analyzing power A depends on the scattering angle in the CM frame θ_{CM}. Assuming that the beam direction is along the Z-axis and that the scattering happens in the ZX plane:

$$A_{ZZ} = -\frac{\sin^2\theta_{CM} \cdot (7 + \cos^2\theta_{CM})}{(3 + \cos^2\theta_{CM})^2}, A_{XX} = -\frac{\sin^4\theta_{CM}}{(3 + \cos^2\theta_{CM})^2}, A_{YY} = -A_{XX} \tag{8.2}$$

The analyzing power does not depend on the beam energy. At $\theta_{CM} = 90^o$ the analyzing power has its maximum $A_{ZZ}^{max} = 7/9$. A transverse polarization also leads to an asymmetry, though the analyzing power is lower: $A_{XX}^{max} = A_{ZZ}^{max}/7$. The main purpose of the polarimeter is to measure the longitudinal component of the beam polarization.

The Møller polarimeter of Hall A detects pairs of scattered electrons in a range of $75^o < \theta_{CM} < 105^o$. The average analyzing power is about $< A_{ZZ} >= 0.76$.

The target consists of a thin magnetically saturated ferromagnetic foil. In such a material about 2 electrons per atom can be polarized. An average electron polarization of about 8% can be obtained. In Hall A Møller polarimeter the foil is magnetized along its

[3](Home page: http://www.jlab.org/~moller/)

plane and can be tilted at angles $20-160^o$ to the beam. The effective target polarization is $\mathcal{P}^{target} = \mathcal{P}^{foil} \cdot \cos\theta^{target}$.

The secondary electron pairs pass through a magnetic spectrometer which selects particles in a certain kinematic region. Two electrons are detected with a two-arm detector and the coincidence counting rate of the two arms is measured.

The beam longitudinal polarization is measured as:

$$\mathcal{P}_Z^{beam} = \frac{N_+ - N_-}{N_+ + N_-} \cdot \frac{1}{\mathcal{P}^{foil} \cdot \cos\theta^{target} \cdot < A_{ZZ} >}, \tag{8.3}$$

where N_+ and N_- are the measured counting rates with two opposite mutual orientation of the beam and target polarizations, while $< A_{ZZ} >$ is obtained using Monte-Carlo calculation of the Møller spectrometer acceptance, $\mathcal{P}^{foil}$ is derived from special magnetization measurements of the foil samples and θ^{target} is measured using a scale, engraved on the target holder and seen with a TV camera, and also using the counting rates measured at different target angles.

Two target holders have been used:

- Before Nov, 2004 the target foil could be rotated in the horizontal plane. The beam polarization may have a horizontal transverse component, which would interact with the horizontal transverse component of the target polarization. The way to cancel the influence of the transverse component is to take an average of the asymmetries measured at 2 complimentary target angles, say 25 and 155°.

- After Nov, 2004 several target foils are tilted at $\sim 20°$ to the beam, in the vertical plane. The vertical beam polarization is very small and only the longitudinal component of the beam polarization contributes to the asymmetry measured.

8.3 Description of Components

8.3.1 MEDM Control

Several components of the polarimeter, namely the target position and the current in the magnets can be checked using the regular MEDM [18]/EDM program of Machine Control Center (MCC). The appropriate window 8.2 can be called from the Hall A MEDM menues. Only the MCC can change the values in this window.

8.3.2 Polarized Electron Target

The Møller Polarized Electron Target is placed on the beamline 17.5 m upstream of the main Hall A physics target.

The target consists of:

- A sliding rail which contains 5 ferromagnetic foils, stretched at 20° to the beam in the vertical plane. The rail can move the target foils across the beam in two projections.

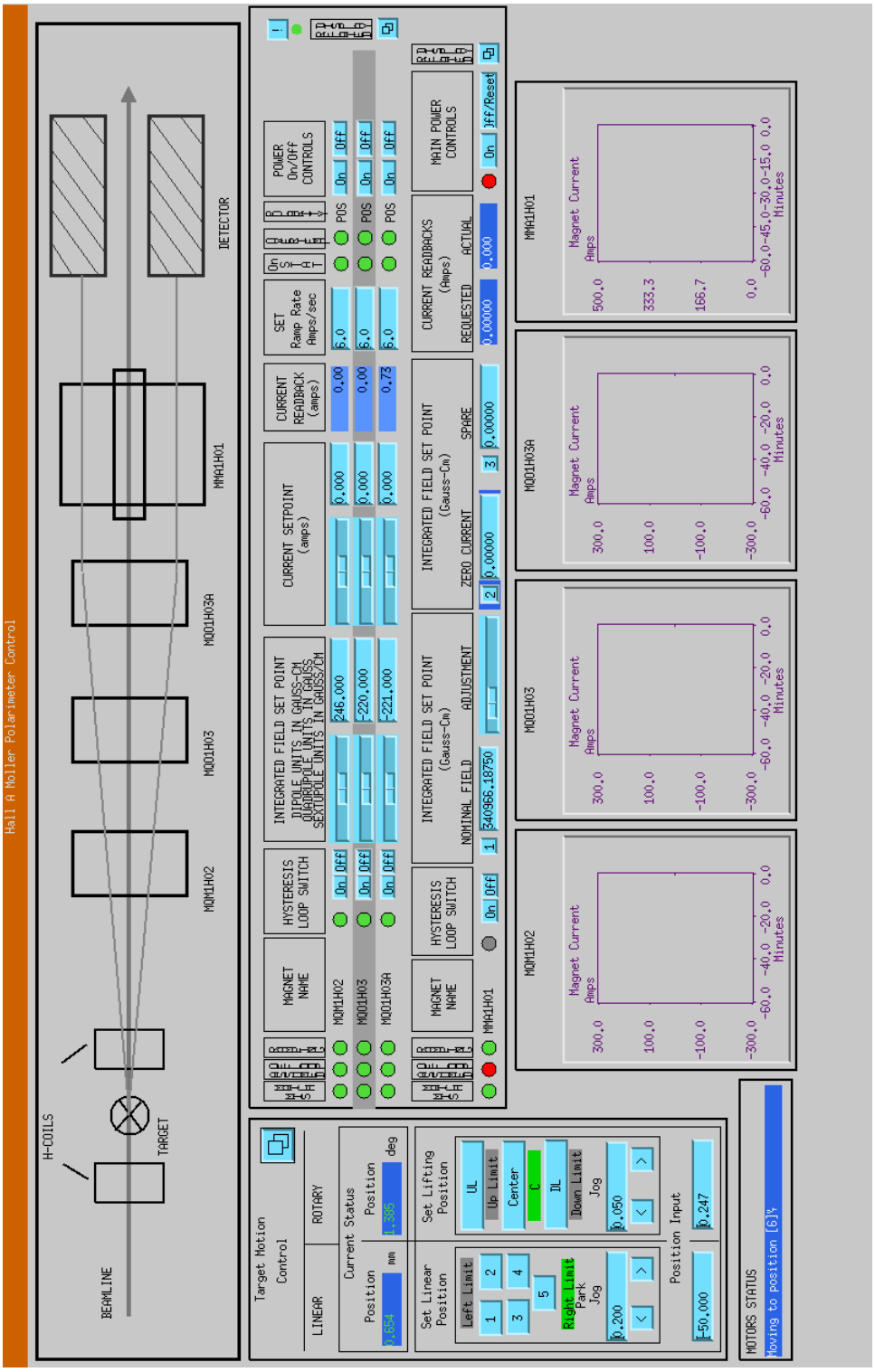

Figure 8.2: The Møller MEDM MCC control.

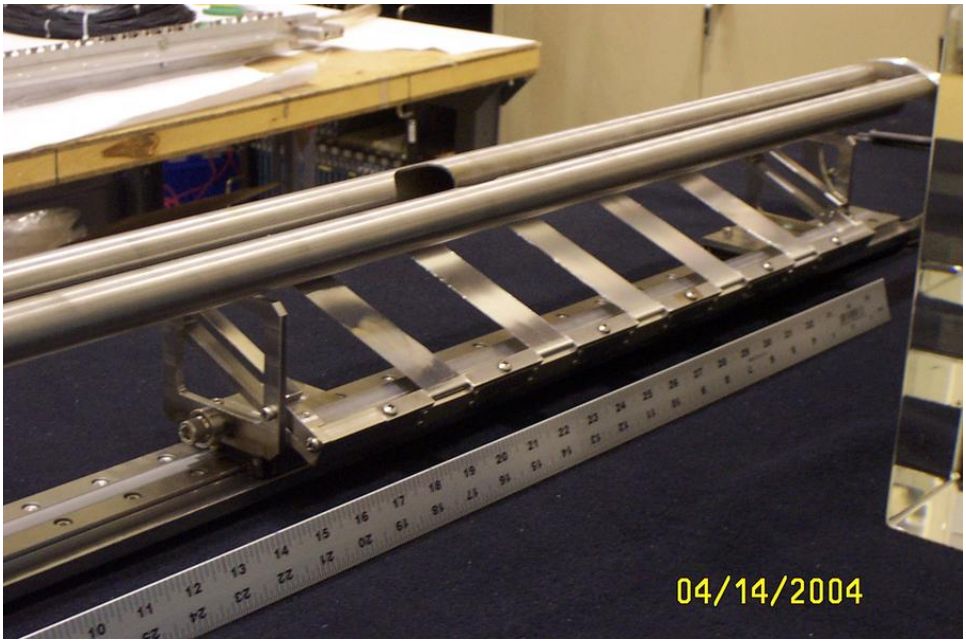

Figure 8.3: The Møller target contains 5 ferromagnetic foils, stretched at 20° to the beam.

- An air-core magnet consisting of two coils coaxial with the beam, used to magnetize the target foils.

The rail with 5 foils is shown in Fig. 8.3.
The foils are described in Table 8.1.

	Position						
	6 Right limit	5	4	3	2	1	0 Left limit
Material	beam hole	SM	Fe	Fe	SM	SM	Al
Thickness, μm	empty	6.8	9.3	14.3	29.4	13.0	16.5
Polarization		7.97%	7.44%	7.62%	8.21%	7.80%	
Comment						old	

Table 8.1: The target foils' parameters. "SM" stands for a supermendur alloy. The polarization are quoteted for a 16 A current in the coils. The target 1 is the old target, used before 2005, installed for its cross-calibration.

The photograph on Fig. 8.4 shows the target chamber, the beam pipe, Helmholtz coils and other elements.

The target rail can be moved horizontally, placing different foils into the beam. The whole target holder can also be moved along another rail, tilted at 20° to the beam, as the foils are tilted. This allows to scan the beam along the foil. Both motions put no

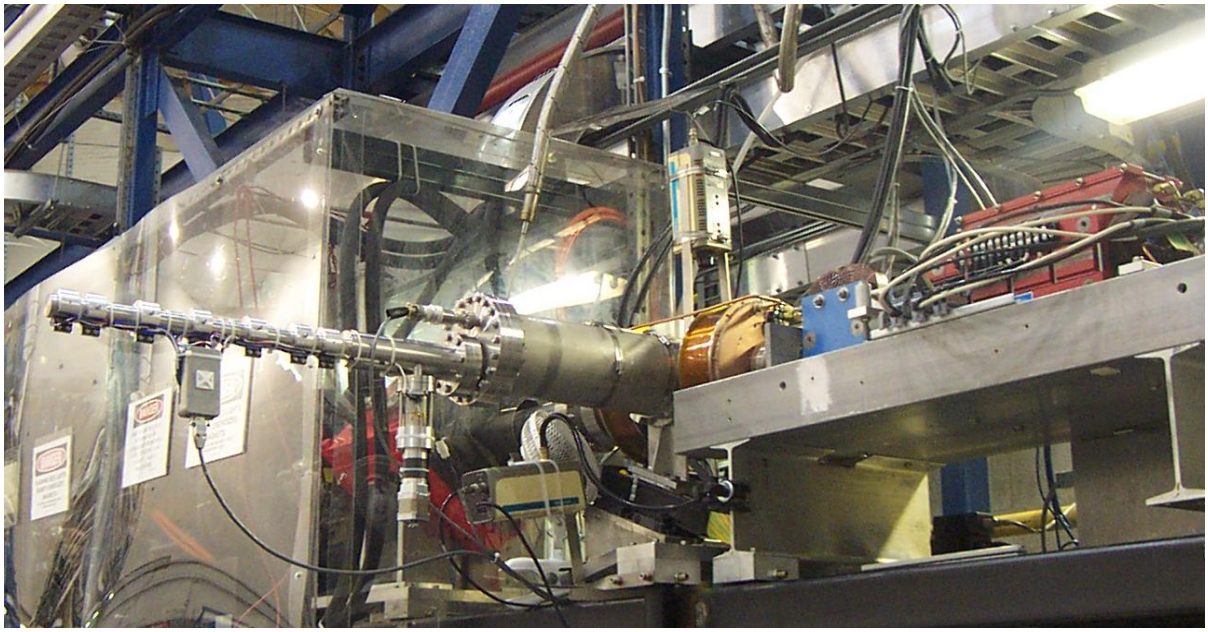

Figure 8.4: The Møller target area.

material in the beam, apart from the thin foils, and can be carried out while the beam is on, at beam currents below 2 μA.

The target can be moved in two projections both by the MCC operators and by the Hall A crew. The beam current applied should not exceed 2 μA. It is allowed to move the target while the beam is on, however in this case the MCC operator must mask the Møller target motion beforehand. Only the authorized personnel from Hall A are allowed to move the target (see section 8.6). Each time the MCC should be asked to provide a "channel access" to iochla for the duration of the measurements.

The target motion is supervised using 2 TV cameras, displayed in Hall A counting house. One camera is looking from the side and shows a scale measuring the longitudinal position of the target. At the central (default) position, the scale shows 31 mm. The second camera shows the horizontal position of the target rail. At the empty (default) position the scale is centered about a mark "20".

The target is magnetically saturated using 2 external Helmholtz coils, providing a field of about 350 Gs along the beam axis at the target center. The coils are turned on by the Møller CODA task, during the data taking. Its polarity is reversed for each new run of data taking (one run typically takes 2-3 min).

The Helmholtz coils are water-cooled and should be connected to the water line.

The beam of a few μA may heat up the target locally by 20-40K, which may change slightly the target polarization. Therefore the beam current is limited to about 2μA because of heating, while the dead time problems typically limit the current to about 1.0μA.

The Møller target positions are connected to the Fast ShutDown (FSD) system of the

accelerator. The photograph on Fig. 8.5 shows the crate which controls the signals.

Figure 8.5: The Møller target motion may cause the Fast ShutDown (FSD) of the accelerator. The LEDs in the top right corner show the appropriate signals from the target. The top LED lit indicates no FSD signal.

8.3.3 Spectrometer Description

The Møller polarimeter spectrometer consists of three quadrupole magnets and one dipole magnet (see Fig.8.1 and also Fig.8.2):

- quadrupole **MQM1H02** (on the yoke labeled $PATSY$);
- quadrupole **MQO1H03** (on the yoke labeled $TESSA$);
- quadrupole **MQO1H03A** (on the yoke labeled $FELICIA$)
- dipole **MMA1H01** (on the yoke marked as $University\,of\,Kentucky$).

The photograph on Fig. 8.6 shows the side view of the spectrometer.

These magnetic elements are controlled by MCC operators.

The spectrometer accepts electrons scattered close to the horizontal plane (see Fig.8.1). The acceptance in the azimuthal angle is limited by a collimator in front of

Figure 8.6: The Møller spectrometer. The target is located at the right side of the photograph, the blue dipole magnet is close to the center.

the dipole magnet, while the detector vertical size and the magnetic field in the dipole magnet limit the acceptance in the scattering angle θ_{CM}.

The electrons have to pass through the beam pipe in the region of the quads, through the collimator in front of the dipole magnet, with a slit of 0.3-4 cm high, through two vertical slits in the dipole, about 2 cm wide, positioned at ± 4 cm from the beam. These slits are terminated with vacuum tight windows at the end of the dipole. The dipole deflects the scattered electrons down, towards the detector. The detector, consisting of 2 arms - 2 vertical columns - is positioned such that electrons, scattered at $\theta_{CM} = 90^o$ pass close to its center. This acceptance is about $76 < \theta_{CM} < 104^o$. At beam energies below 1 GeV the vertical slits in the dipole limit the acceptance to about $83 < \theta_{CM} < 97^o$.

For a given beam energy there is an optimal setting of the currents in these 4 magnets (see section 8.4.3). At energies higher than 2.5 GeV it is possible to optimize the beam line for both regular running and for Møller measurements. Typically, the dipole magnet should be turned on only for the Møller measurements.

8.3.4 Detector

The Møller polarimeter detector is located in the shielding box downstream of the dipole and consists of two identical modules placed symmetrically about a vertical plane containing the beam axis, thus enabling coincidence measurements. Each part of the detector includes:

- An aperture detector consists of four scintillators with light guides and Hamamatsu R4124 (13 mm diameter) photomultiplier tubes connected to each segment. Size of the aperture assembled detector is 31cm×4cm×3.6cm.
- A "spaghetti" lead - scintillating fiber calorimeter[4], consisting of 2 blocks 9×15×30 cm^3, each separated into 2 channels equipped with Photonis XP2282B (2 inch) photomultiplier tubes. Thus, the vertical aperture is segmented into 4 calorimeter channels.

The HV crate is located in the Hall A rack 15 and is connected to a portserver *hatsv5*, port 11. HV for the lead glass detectors is tuned in order to align the Møller peak position at a ADC channel 300 for each module, which means that the gain of the the bottom modules is about 50% higher than the gain of the top modules.

8.3.5 Electronics

The electronics, used for Møller polarimetry, is located in several crates in the Hall:

1. VME, board computer hallavme5 - for DAQ;
2. CAMAC - for the trigger and data handling;
3. NIM - for the trigger and data handling;
4. LeCroy 1450 - HV crate, slot 4.

The photograph on Fig. 8.7 shows the crates 2-4. One can connect to the CPU boards and the HV crate via a portserver:

1. hallavme5 - hatsv5 port 4;
4. LeCroy 1450 - hatsv5 port 3.

8.3.6 DAQ

The DAQ[5] is based on CODA [20] and runs at adaql2, connecting to hallavme5. The database server for CODA is located on adaql1.

8.3.7 Slow Control

The Helmholtz coils are controlled via a script starting automatically at the beginning of each CODA run. The polarity of the current in the coils is reversed at every new run.

The HV, the electronics settings and the collimator position are controlled from a Java program, equipped with a GUI[6].

Start the slow control task:

– Login to adaql1 as moller;

[4] before summer 2002 a lead glass calorimeter consisting of 4 8×8×30 cm^3 was used. It lost a big fraction of the amplitude due to the radiation damage and deterioration of the optical contact.

[5] (More details in: http://www.jlab.org/~moller/guide1.2_linux.html)

[6] More details in http://www.jlab.org/~moller/slow_mpc.html

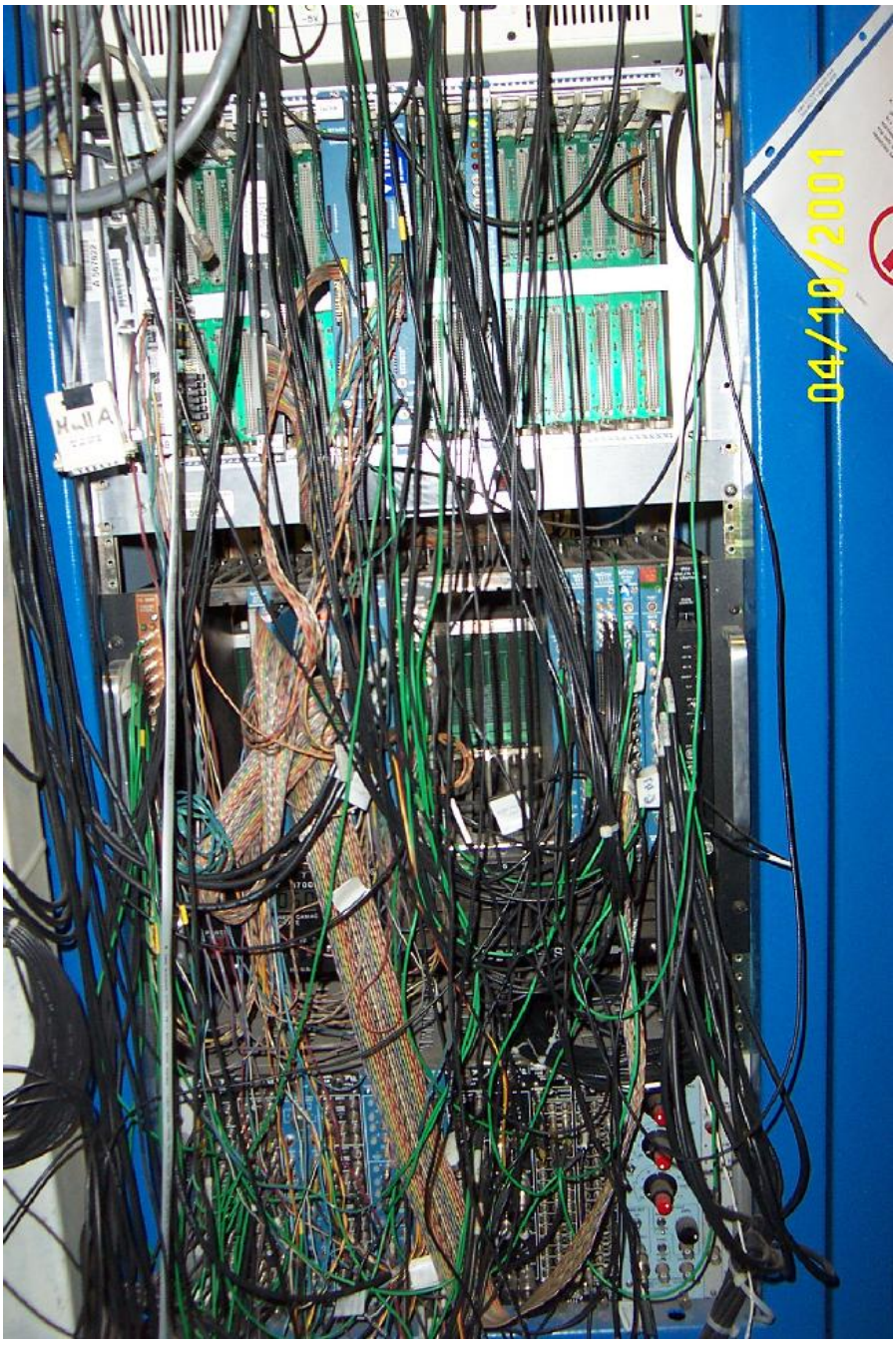

Figure 8.7: The Møller electronics, located in the Hall, at the right side of the beam line. The top crate is the VME DAQ crate, the middle one is the CAMAC crate and the bottom one is the NIM crate. The first VME crate, used to control the Helmholtz coils, is above these three.

- adaql1> cd Java/msetting/
- adaql1> ./mpc - start the slow control task.

It may take about a minute to start all the components and read out the proper data from the electronic crates. The slow control console is presented on Fig. 8.8. The

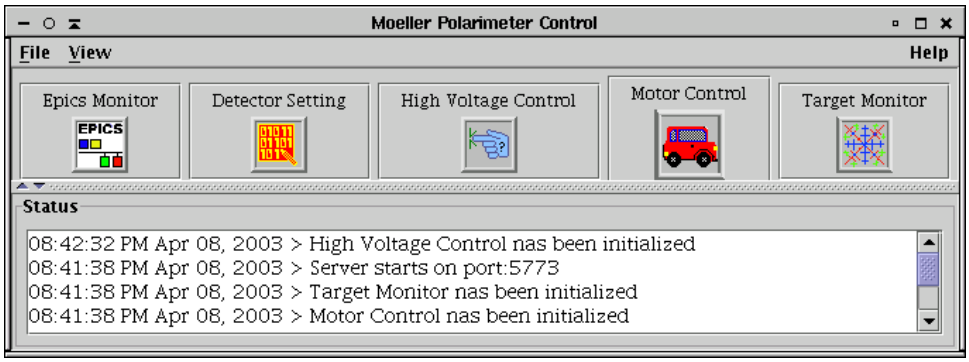

Figure 8.8: The slow control console (Java).

components are:

- EPICS [14] Monitor: these EPICS variables are stored for every DAQ run
- Detector Settings is used to set up the thresholds, delays etc.
- High Voltage Control for the photomultiplier tubes
- Motor Control to move the collimator
- Target Monitor information on the target position, magnets etc.

High voltage can be changed or turned on/off using the HV console (Fig. 8.9), where the first 8 channels belong to the calorimeter and the other 2 channels belong to the aperture counters. The settings of the CAMAC electronics used to make the trigger and control DAQ are controlled using the Detector Setting window (Fig. 8.10):

- Delay line - the delays for the calorimeter and counter signals;
- LedDiscriminator - discriminator thresholds for the calorimeter and the counters
- PLU Module - settings of the logical unit

The collimator width can be changed using Motor Control window (Fig. 8.11).

8.4 Operating Procedure

The procedure includes general steps as follows:

- "Non-invasive" preparations - start the appropriate computer processes, turn on the HV and learn the magnet settings needed;

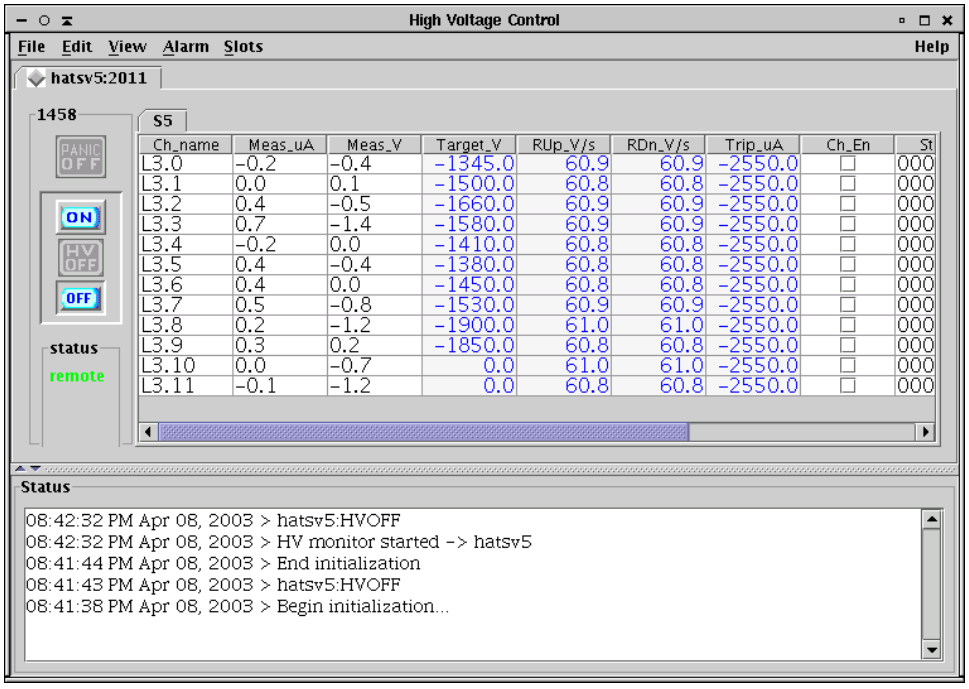

Figure 8.9: HV control console.

- "Invasive" preparation: beam tuning with the regular magnet settings, loading the Møller settings, beam tuning, if neccessary, installing the Møller target;
- Detector check/tuning;
- Measurements;
- Restoring the regular settings.

The "non-invasive" preparations can be done without disturbing the running program in the Hall. It is reasonable to perform these preparations before starting the "invasive" part.

In more details, the "invasive" procedure looks as follows:

– Remove the main target;
– Load the Møller settings in the magnets, keep the dipole off;
– Tune the beam position with any convenient beam current;
– Turn on the Møller dipole;
– Check the beam position;
– Tune the beam to ~ 0.5 μA for Møller measurements;
– Pull in the Møller target, using the TV camera to make sure the foil is at the window center;
– Make at least two CODA runs in order to use both coil polarities;

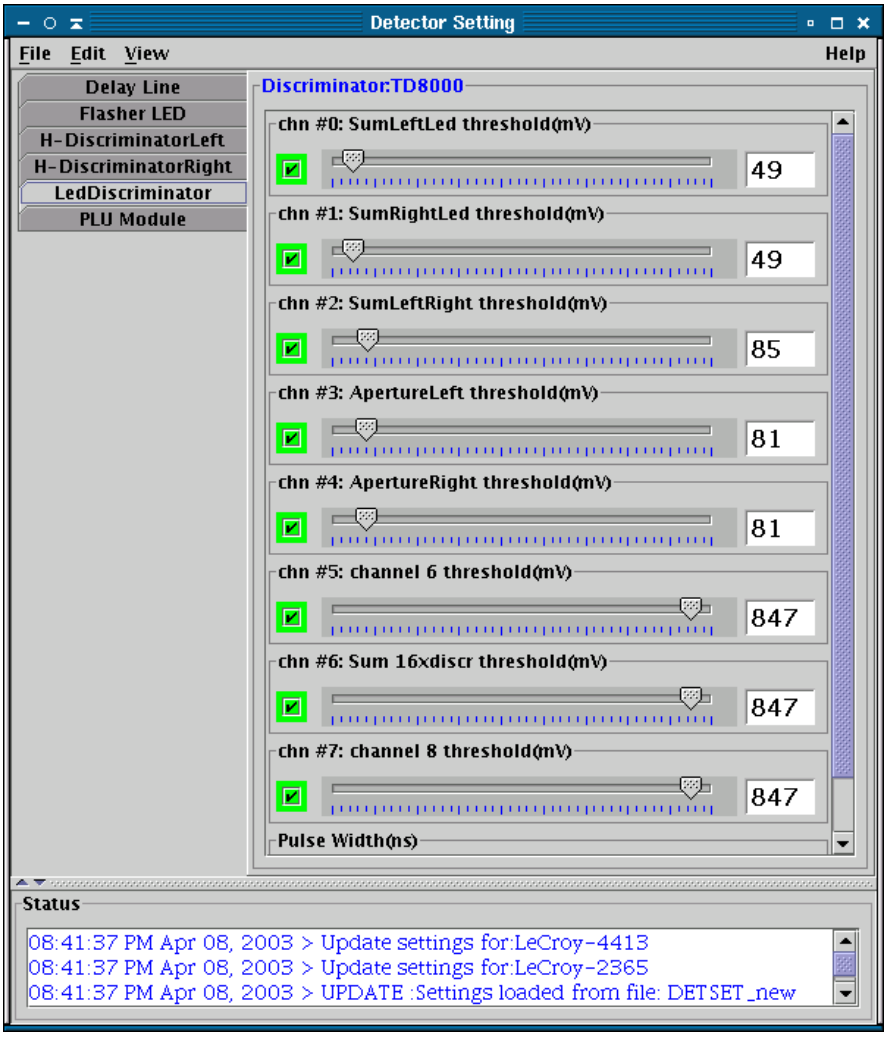

Figure 8.10: Detector setting console.

8.4.1 Initialization

In order to control the operations several sessions of moller account must be opened at computers adaql1,.... The data analysis and some initial calculations are done using a PAW [21] session on adaql1:

- Login to adaql1 as moller;
- adaql1> cd paw/analysis, start PAW (type paw), select Workstation type 3.

Check that the portserver connections are available:

- Try telnet hatsv5 2003 and telnet hatsv5 2004;
- If a connection i refused - clean it up, by connecting telnet hatsv5 as root and typing kill 3 or kill 4, see instructions in ãdaq/doc/portserver.doc.

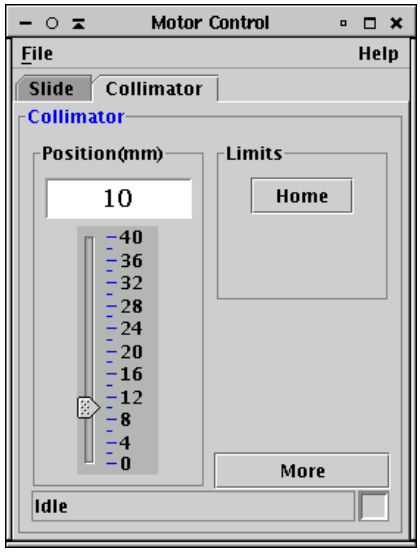

Figure 8.11: Control console for the collimator (and also the slide, which is not relevant here).

- Login to adaql1 as moller;
- Start the slow control (see section 8.3.7);
- Load the regular settings and the appropriate HV.

Slow control:

- Login to adaql1 as moller;
- Start the slow control (see section 8.3.7);
- Load the regular settings and the appropriate HV.

CODA runs on adaql1:

- Login to adaql1 as moller, make two sessions;
- adaql2> kcoda - clean up the old coda;
- Reset the VME board hallavme5 by: telnet hatsv5 2004, -> reboot;
- adaql2> start_coda - start CODA;
- Click Connect and select the configuration beam_pol;
- Click Download to download the program into the VME board.

8.4.2 Initial Beam Tune

Typically, the Møller measurements are taken during the regular Hall A running, when the beam has been tuned for this running. However, the Møller measurements require a different magnetic setting. At least the dipole magnet has to be turned on. This magnet slightly deflects the beam downward. The deflection at the main target could be 2-8 mm,

depending on the beam energy. It is, therefore, useful to tune the beam position before the dipole is turned on. It can be done before the magnets are set to the Møller mode. The requirements for straight beam are:

- On BPM IPM1H01 (in front of the Møller target) $|X| < 0.1$ mm, $|Y| < 0.1$ mm.
- On BPM IPM1C20 (upstrean of the Compton chicane) $|X| < 0.1$ mm, $|Y| < 0.1$ mm.

The request should be given to MCC.

8.4.3 The Magnet Settings

In order to find the proper settings for the given beam energy, say 3.25 GeV, type on the PAW session:

PAW> exec sett_magp e0=3.25 nq=3 for 3-quad configuration

PAW> exec sett_magp e0=3.25 nq=2 for 2-quad configuration

The printed values for GL and BdL should be checked with the current values, displayed on the MEDM window 8.3.1. The MCC should be asked to load the Møller settings in the magnets - they have a tool to load the proper settings for the Møller magnets and a few other magnets on the beam line. The set values should be compared with the calculated values[7]. The beam must be turned off when the magnets are tuned.

8.4.4 Final Beam Tune

The beam parameters for Møller measurements are:

- the beam current ~ 0.5 μA and < 2 μA;
- the beam current should be reduced mainly by closing the "slit" in the injector (not by the laser attenuator), in order to reduce the effect of current leak-through from the other halls.

8.4.5 Target Motion

The procedure is as follows:

- Ask the MCC to mask the main target (cryotarget or whatever) motion and remove the main target, then ask the MCC to unmask the motion;
- Ask the MCC to mask the Møller target motion;
- Move to target to the position needed (say, 5) using the MEDM screen (see Fig. 8.2). Check that the target is close to the center of the window in the TV camera screen.

[7] A reasonable accuracy in the magnets settings is about 1-2%

8.4.6 Detector Tuning and Checking

The goal is to check that the detector is working, that the counting rates are normal and that the Møller peaks are located at about ADC channel 300 for all the calorimeter blocks.

A. Data taking with CODA

   1. Take a RUN for about 20k events. Let us assume the run number is 9911.

B. Data analysis with PAW

   1. PAW> exec run run=9911: build an NTUPLE and attach it to the PAW session;
   2. PAW> exec lg_spectra icut=60 run=9911: look at the ADC distributions. The peaks should be at about ADC channel 300 for all 8 modules. If the peaks are off - try to adjust the HV (do not go beyond 1990V).

C. Check of the background

   1. Raise the thresholds to 240 mV of the channels 1 and 2 of the discriminator, using the slow control window (see section 8.3.7);
   2. Take a run of about 20k events, say run=9915;
   3. PAW> exec lg_spectra icut=60 cut=11 run=9915: look at the ADC distributions. The peaks should be at about ADC channel 300 for all 8 modules. The histograms 9 and 10 present the sums of the left and right arms. The histogram 11 (sum of both arms) should contain a clean peak at about channel 600;
   4. PAW> exec asymu run=9915: polarization analysis should provide a reasonable number. Check the scaler rates per second. The counting rates in each arm should not exceed 600kHz. If they are higher ask the MCC to reduce the beam current.

8.4.7 Polarization Measurement

1. Take an even (say, 2) number of runs of data with the given angle, each run of about 20-30k events (30k at $E_{beam} < 2$ GeV).
2. Analyze the data
   1. PAW> exec run run=???? and
   2. PAW> exec asymu run=????, for each RUN,

8.5 Safety Assessment

8.5.1 Magnets

Particular care must be taken in working in the vicinity of the magnetic elements of the polarimeter as they can have large currents running in them. The quadrupole magnets and the leads for the dipole magnet are protected with Plexiglas shields. Removing the shields can be done by Hall A technical staff, with the power supplies turned off and using the "Lock out / Tag out" procedure. All the personnel involved must have "Lock out / Tag out" training. Only members of the Møller polarimeter group and Hall A technical staff are authorized to work in the immediate vicinity of the magnets with the shields removed.

As with all elements of the polarimeter which can affect the beamline, the magnets are controlled by MCC. There are four red lights which indicate the status of the magnets. The dipole has two lights which are activated via a magnetic field sensitive switch placed on the coils of the dipole. One light is placed on the floor on beam left, and the other is placed on the raised walkway on beam right. The quadrupoles have similarly placed lights (one on the floor on beam left and one on the walkway), and are lit up when any one of the Møller quads is energized. The status of the quadrupole power supplies is on the checklist for closing up Hall A.

The power supply (62 V, 500 A rating) for the dipole is located in the Beam Switch yard Building (Building 98). The maximum current for the dipole is 450A. The quadrupole power supplies (40 V, 330 A rating) are located in Hall A electronics rack 13.

8.5.2 Vacuum System

One must be careful in working near the downstream side of the dipole magnet, as there are two 2 by 16 cm, 4 mil thick titanium windows. The windows are partially protected by a lead collimator downstream of the dipole. Only members of the Møller polarimeter group should work in this area. If work is done on the collimators, the appropriate ear and eye protection should be used.

8.5.3 High Voltage

There are 38 photomultiplier tubes within the detector shielding hut, with a maximum voltage of 3000 V. The detector is serviced by sliding it back on movable rails. The high voltage must be turned off during any detector movement. Only members of the Møller group should move the detector.

8.5.4 Target

To avoid damage to the Møller target, the target should not be in the beam if the beam current is greater than 5 μA. The experimenters are responsible for ensuring that the

Møller target is removed from the beam for regular running and that its position is unmasked.

8.6 Authorized Personnel [8] [9]

The list of the presently authorized personnel is given in Table 8.2. Other individuals must notify and receive permission from the contact person (see Table 8.2) before adding their names to the above list.

Name		Dept.	Telephone		e-mail	Comment
			JLab	Pager		
Oleksandr	Glamazdin	Kharkov	5441	5441	glamazdi@jlab.org	
Javier	Gomez	JLab	7498	7498	gomez@jlab.org	Primary contact
Viktor	Gorbenko	Kharkov	5441	-	gorbenko@jlab.org	
Roman	Pomatsalyuk	Kharkov	5395	0001	romanip@jlab.org	
Jixie	Zhang	JLab	5352	5352	jixie@jlab.org	

Table 8.2: Moller Polarimeter: authorized personnel.

[8] *CVS revision* Id: moller-personnel.tex,v 1.6 2010/06/23 14:32:05 gomez Exp

[9] Authors: E. Chudakov (gen@jlab.org), O.Glamazdin (glamazdi@jlab.org), J. Gomez (gomez@jlab.org)

Chapter 9

Compton Polarimeter [1] [2]

9.1 Introduction

In order to measure the longitudinal polarization of the 3-6 GeV high intensity TJNAF electron beam, a Compton Polarimeter was built by CEA Saclay, LPC Clermont-Ferrand, and Jefferson Laboratory. The Compton polarimeter has been running since february 1999 and has been used by severals HALL A experiments.

9.2 Principle of Operation

The Compton effect, light scattering off electrons, discovered by Arthur Holly Compton (1892-1962), Nobel prize in Physics, 1927, is one of the cornerstone of the wave-particle duality. Compton scattering is a basic process of Quantum Electro-Dynamic (QED), the theory of electromagnetic (EM) interactions. During 50's and 60's, the QED theoretical developments allow Klein and Nishina to compute accuratly the so-called Compton interaction cross section. Experimental physicists performed serveral experiments which are in good agerement with the predictions. This is now a well established theory, and is thus natural to use the EM interaction, such as Compton scattering, to measure experimental quantities such as polarization of an electron beam .

Many of the Hall A experiments of Jefferson Laboratory using a polarized electrons beam require a measurement of this polarization as fast and accurate as possible. Unfortunately the standard polarimeters, like Møller or Mott, require the installation of a target in the beam. Therefore, the polarization measurement can not to be performed at the same time than the data taking because the beam, after the interaction with the target, is misdefined in terms of polarization, momentum and position. Another physical solution has to be found in order to permit a non-invasive polarization measurement of the beam. This is the primary motivation for Compton Polarimetry.

This physical process, schematically illustrated in Fig.9.1, is well described by QED.

[1] *CVS revision* Id: compton.tex,v 1.8 2004/12/15 00:12:59 gen Exp

[2] Authors: S.Nanda nanda@jlab.org

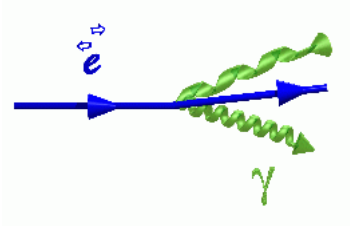

Figure 9.1: Schematic view of compton scattering

The cross sections of the polarized electrons scatterred from polarized photons as a function of their energies and scattering angle can be precisiely calculated. The cross sections are not equal for parallel and anti-parallel orientations of the electron helicity and photon polarization. The theoretical asymmetry A_{th} defined as the ratio of the difference over the sum of these two cross sections is then the analyzing power of the process. With the kinematical parameters used at JLab, the mean value of this analyzing power is of the order of few percent.

The polarization of the Jefferson Lab electron beam is flipped 30 times per second. Upon interation with a laser beam of known circular polarization, an asymmetry, $A_{exp} = \frac{N^+ - N^-}{N^+ + N^-}$, in the Compton scattering events $N^{\pm}$ detected at opposite helicity. In the following, the events are defined as count rates normalized to the electron beam intensity within the polarization window. The electron beam polarization is extracted from this asymmetry via [22]

$$P_e = \frac{A_{exp}}{P_\gamma A_{th}}, \tag{9.1}$$

where P_γ denotes the polarization of the photon beam. The measured raw asymmetry A_{raw} has to be corrected for dilution due to the background-over-signal ratio $\frac{B}{S}$, for the background asymmetry A_B and for any helicity-correlated luminosity asymmetries A_F, so that A_{exp} can be written to first order as

$$A_{exp} = \left(1 + \frac{B}{S}\right) A_{raw} - \frac{B}{S} A_B + A_F. \tag{9.2}$$

The polarization of the photon beam can be reversed with a rotatable quarter-wave plate, allowing asymmetry measurements for both photon states, $A_{raw}^{(R,L)}$. The average asymmetry is calculated as

$$A_{exp} = \frac{\omega_R A_{raw}^R - \omega_L A_{raw}^L}{\omega_R + \omega_L}, \tag{9.3}$$

where $\omega_{R,L}$ denote the statistical weights of the raw asymmetry for each photon beam polarization. Assuming that the beam parameters remain constant over the polarization reversal and that $\omega_R \simeq \omega_L$, false asymmetries cancel out such that

$$A_{exp} \simeq \frac{A^R_{raw} - A^L_{raw}}{2}(1 + \frac{B}{S}). \quad (9.4)$$

Using a specific setup, the number of Compton interactions can be measured for each incident electrons helicity state (aligned or antialigned with the propagation direction). These numbers are dependant of process cross sections, luminosity at the interaction point and time of the experiment. At first order, assuming the time and luminosity are equal for the both electron helicity states, the counting rates asymmetry is directly proportionnal to the theoretical cross section asymmetry. From one to the other The proportionnality factor is equal to the values of the photon circular polarization Pphoton multiplied by the electron polarization Pelectron, so that :

Measuring the photons polarization and experimental asymmetry, calculating theoretical asymmetry, one can deduce the electron beam polarization. One electron over a billion is interacting with the photon beam which means 100000 interactions per second. So as only few incident electrons are interacting, these polarization measurements are completly non-invasive for the electron beam in term of positions, the orientations and the physical characterictics of the beam at the exit of the polarimeter. Compton polarimeter principles at JLab The backward scattering angle of the Compton photons being very small, the first priority is to separate these particles from the beam using a magnetic chicane. The energy of the backward photons will be measured by an electromagnetic calorimeter, the so-called $PbWO_4$ coming from the LHC's R & D. The third dipole of the chicane, coupled to the electrons detector, will be used as a spectrometer in order to measure the scattered electron momentum. To perform a quick polarization measurement, the photon flux has to be as high as possible. A Fabry-Prot Cavity, made of 2 multi-layers concave mirrors with very high reflectivity, will amplify this flux to a factor greater than 7000. The 15 meters long Compton Polarimeter has been installed in the last linear section of the arc tunnel, at the entrance of the Hall A at spring 98. The complete setup, including the optical cavity was installed in February 99 and is running successfully since then.

9.3 Description of Components

As shown in Fig.9.2, the Compton polarimeter consists of four major subsystems and associated data acquisition system as described below:

9.3.1 Optics table

A high-finesse Fabry-Perot cavity housed on a optics table serves the role of the photon target. The optical setup consists of four parts:

1. a 240 mW infra-red Laser operating at 1064 nm wavelength,

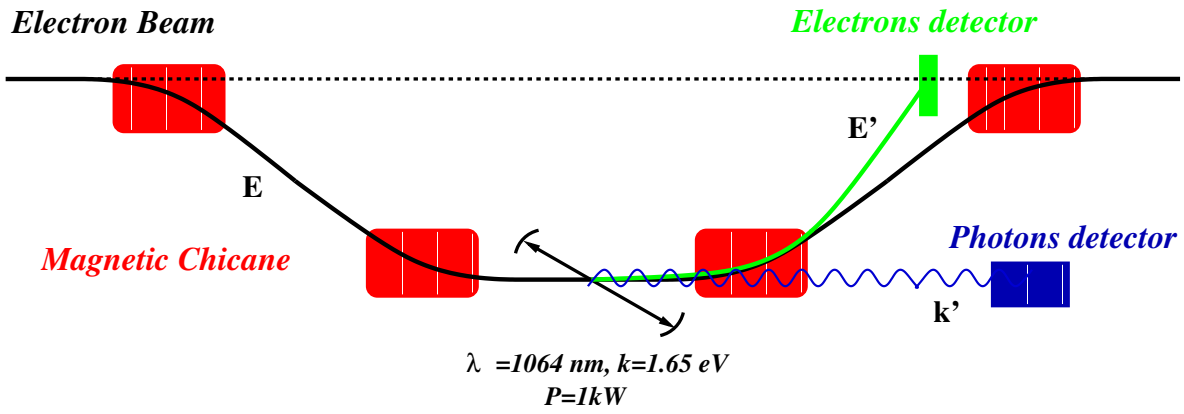

Figure 9.2: Schematic layout of the Compton polarimeter

2. input optical transport form the laser beam to the cavity to optimize laser beam size and polarization,

3. the resonant Fabry-Perot cavity that delivers more than 1kW of circularly polarized infra-red light

4. optical devices to measure the circularly polarization of the photons at the exit of the cavity

The layout of the optical setup is shown in Fig.9.2. Details of the resonant Fabry-Perot cavity for Compton polarimetry can be found in Nuclear Instruments And Methods In Physics Research Section A412 1 (1998) pp. 1-18 http://hallaweb.jlab.org/compton/Documentation/Papers/nima4592001.pdf

9.3.2 Magnetic Chicane

The Compton magnetic chicane, illustrated in Fig.9.4, consists of 4 dipoles (1.5 T maximum field,

1 meter magnetic length) here after called D1,2,3,4. (D1,D2) deflect the electrons vertically down to steer the beam through the Compton interaction point (CIP) located at the center of the optical cavity. After the CIP, the electron are vertically up deflected (D3,D4) to reach the Hall A target. The scattered electron are momentum analyzed by the third dipole and detected thanks to 4 planes of silicon strips. The magnetic field is scaled with the beam energy, insuring the same vertical deflection at the CIP, up to 8 GeV electrons for 1.5 T field. The parameters of the Chicane are as follows:

- The distance between the geometrical axis of the dipoles (D1,MMC1P01) and (D2,MMC1P02) in the longitudinal plane is 5400 mm

- The distance between the beam entry axis in (D1,MMC1P01) anfd the beam exit axis in (D2,MMC1P02) in the bending plane (vertical axis) is 304 mm

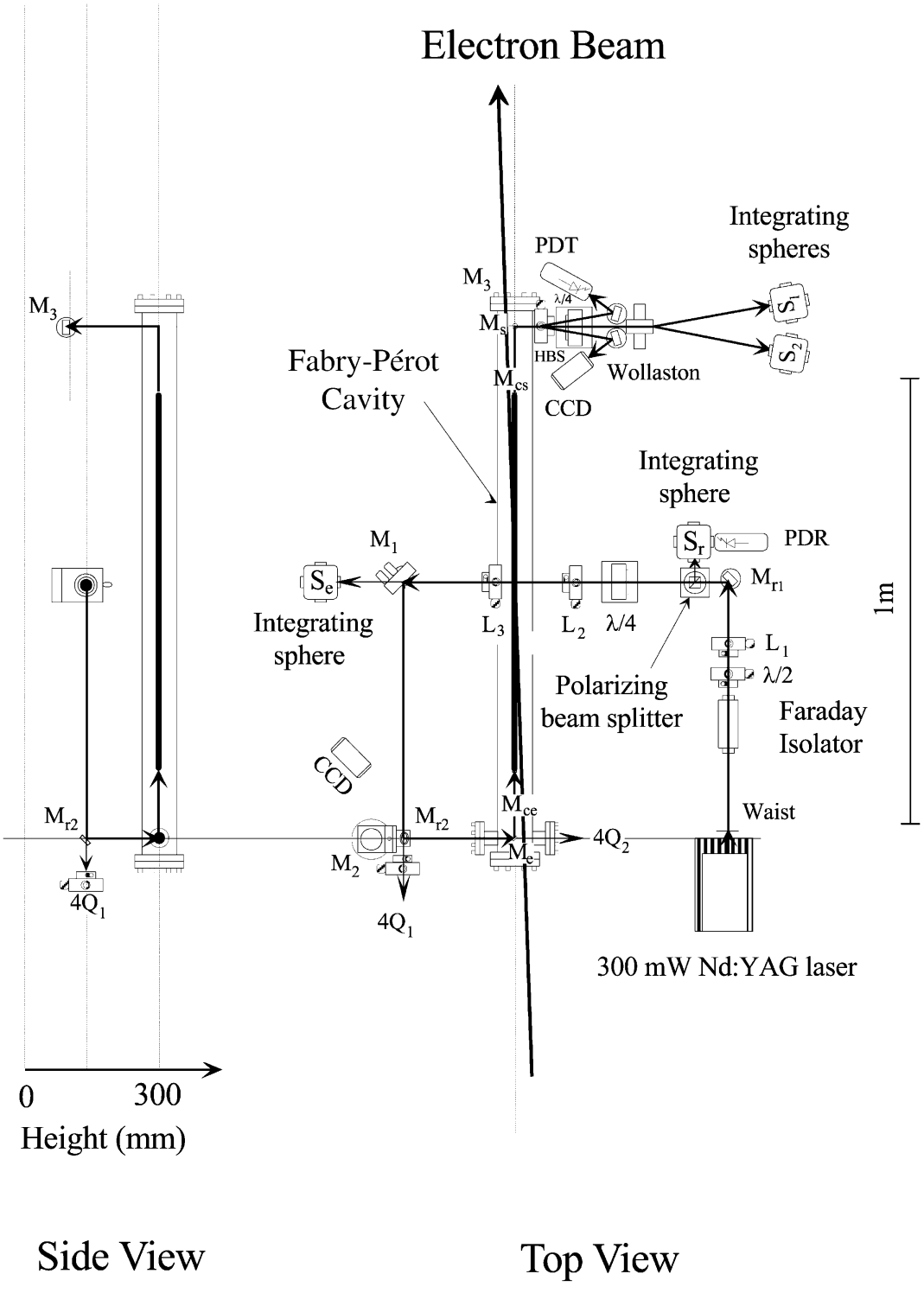

Figure 9.3: Optics setup of the Compton polarimeter

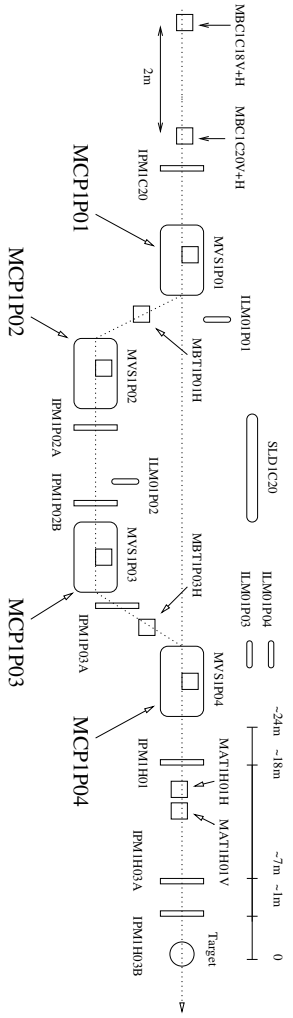

Figure 9.4: Schematic layout of the beamline elements along the compton chicane area.

- The longitudinal magnetic length on the axis of (D1,MMC1P01) and (D2,MMC1P02) is 1000 mm.

Under these conditions :

- the bending angle is 3.2226°
- The radius of curvature is r=17.7887 m
- B.r (T.m) = 3.33564 p (GeV/c)
- At the centre of (D2,MMC1P02) : B(T) = 0.1875145 p (GeV/c).

9.3.3 Photon Detector

To detect Compton backscattered photons, an electromagnetic calorimeter is used. It consists of 25 $PbWO_4$ crystals (2cmx2cmx23cm) read by XP1911 Philips photomultiplier tubes and is located in the line of sight of the optical cavity, just behind the third dipole

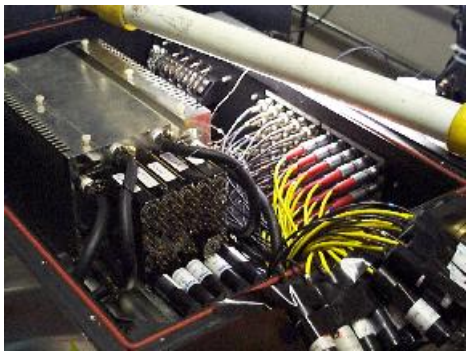

Figure 9.5: View of the Compton photon detector

of the chicane. A photographic view of the calorimeter as installed in the beamline is shown in Fig.9.5. Details on this calorimeter can be found in Nuclear Instruments And Methods In Physics Research Section A443 2-3 (2000) pp. 231-237 http://hallaweb.jlab.org/compton/Documentation/Papers/nima4432000.pdf.

9.3.4 Electron detector

The electron detector is made of 4 planes of silicon strips composed of 48 strips each of width 650 (600 + 50) microns and 500 microns thick. The planes are staggered by 200 microns to allow for better resolution and the first strip of the first plane is about 8 mm away from the beam. Illustrated in Fig.9.6 is a view of the actual electron detector.

Distance between the CIP and the first strip is 5750 mm. We recall that between the CIP and the end of the Dipole 3 is 2150 mm. For a beam of 3.362 GeV the Compton

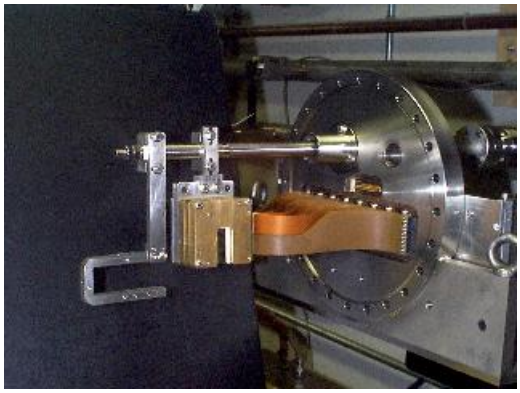

Figure 9.6: View of the Compton electron detector

edge is at 3.170 GeV. This corresponds to a deviation of 17 mm. Thus at this energy, only one half of the Compton spectrum is covered and it extends to the 13th strip of the first plane. The trigger logic looks for a coincidence between a given number of plane in a "road" of 2 strips. For each trigger it outputs a signal check by the Polarimeter DAQ.

9.3.5 Fast acquisition system

The goal of this system is to acquire for each electron helicity state the energie of the scattered photons at a rate up to 100 kHz. The energy of each Compton event can be reconstructed from the signals of the 25 PMT of the photon calorimeter with front-end electronics and ADCs. Each helicity state, given by the accelerator, is also numbered. Further information is given for each event (type of event, status of the polarimeter at event's time) and for each polarization period (duration, dead time, counting rate,...). A specific tool, the so-called spy_acq, has been developped in Tcl/Tk to manage all acquisition system parameters. Finally, a web-based logbook is available on this site at http://hallaweb.jlab.org/compton/Logbook/index.php.

9.4 Operating Procedure

The main operations computer for the compton polarimeter is compton.jlab.org located in the central isle of the Hall A counting house. A dedicated console labelled as Compton is in the backroom. This machine, running RedHat Linux 7.3, runs the compton data acquisition, analysis, and the EPICS [14] slow control system. To begin compton polarimeter activity log on to:
machine: compton.jlab.org
username: compton
password: *******(contact Sirish Nanda (7176))

All necessary environment variables are automatically defined on logon. Follow the steps below paying careful attention to ensuring that you have checked the result of each step:

9.4.1 DAQ Setup

- Go to the CODA desktop and open a new terminal window. Type

  $ coda start

  The general syntax is coda start—stop—restart. If CODA is in a bad state, do coda restart. All relevant CODA processes are started and you whould get the runcontrol panel as shown in Fig.9.7.

- Click on the "CONNECT" button. You will get the window shown in Fig.9.8.

- Click on the **Configure** button and you will get the sub-panel shown in Fig.9.9. Click on the "Run type" button and choose of of the following configurations:

- **Fastacq** This is the standard run type to take data in a nominal situation.

- **Beamtune** This run type could be use during beam tuning phases. It does not record good data, but by connecting to ROC1 (telnet cptaq1), you could monitor the trigger counting rate more quickly than with spy_acq.

- **Scanacq** This run type is used during the electrons detector harp scan procedure. It stores in particular the electrons detector ruler values at high counting rates.

- **Linscan** This is the procedure to determine the non-linearity of the ADC. This run type is used to scan the response of the photon detector electronic with test pulses of different amplitude. The acquisition system set the electronics to send 50ns long test pulses to the integration and ADC devices, and increase progressively the amplitude of these pulses.

- **Others** The other run types are essentially used for debug purposes. If you are not an expert of the acquisition do not use them.

- Confirm via the "OK" button You should see in the window below the following message "transition configure succeeded"

- Click on the "Download" Button to get the messages shown in Fig.9.8.

- Start the run clicking on the "Start Run" button
  You should see the run control display as in Fig.9.8.
  Check that the following happens:
  transition Go succeeded

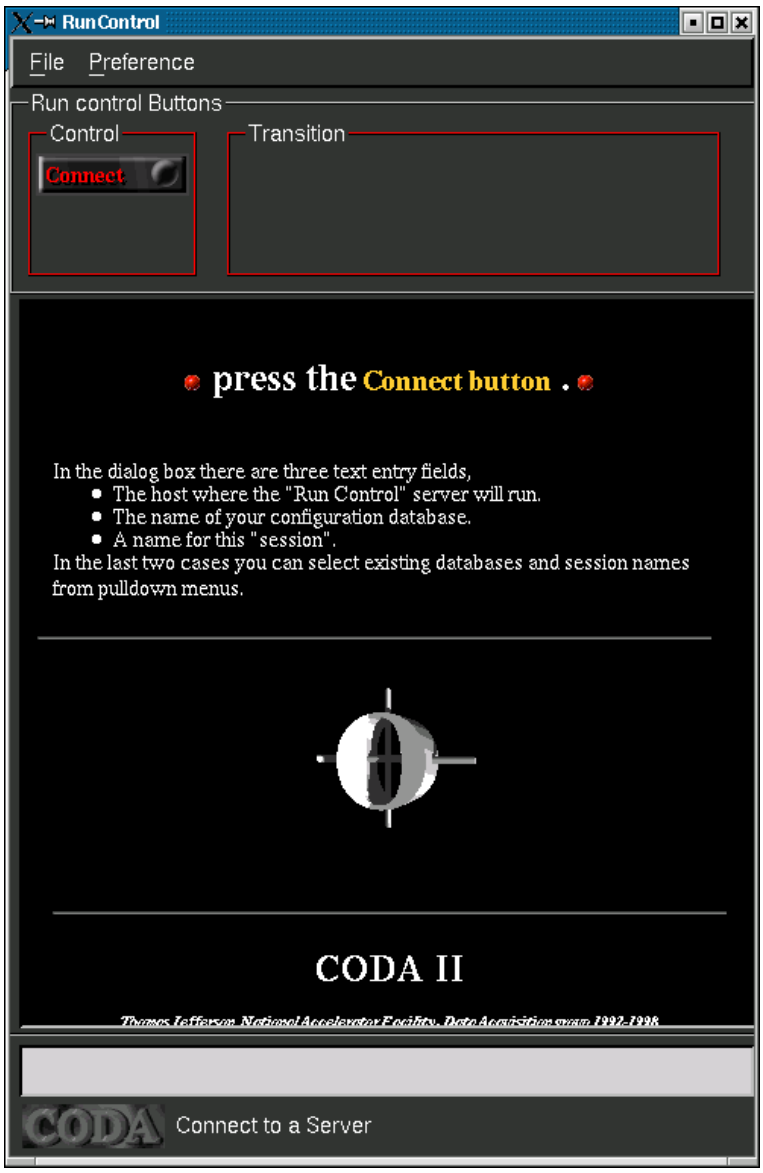

Figure 9.7: Compton DAQ setup: *connect*

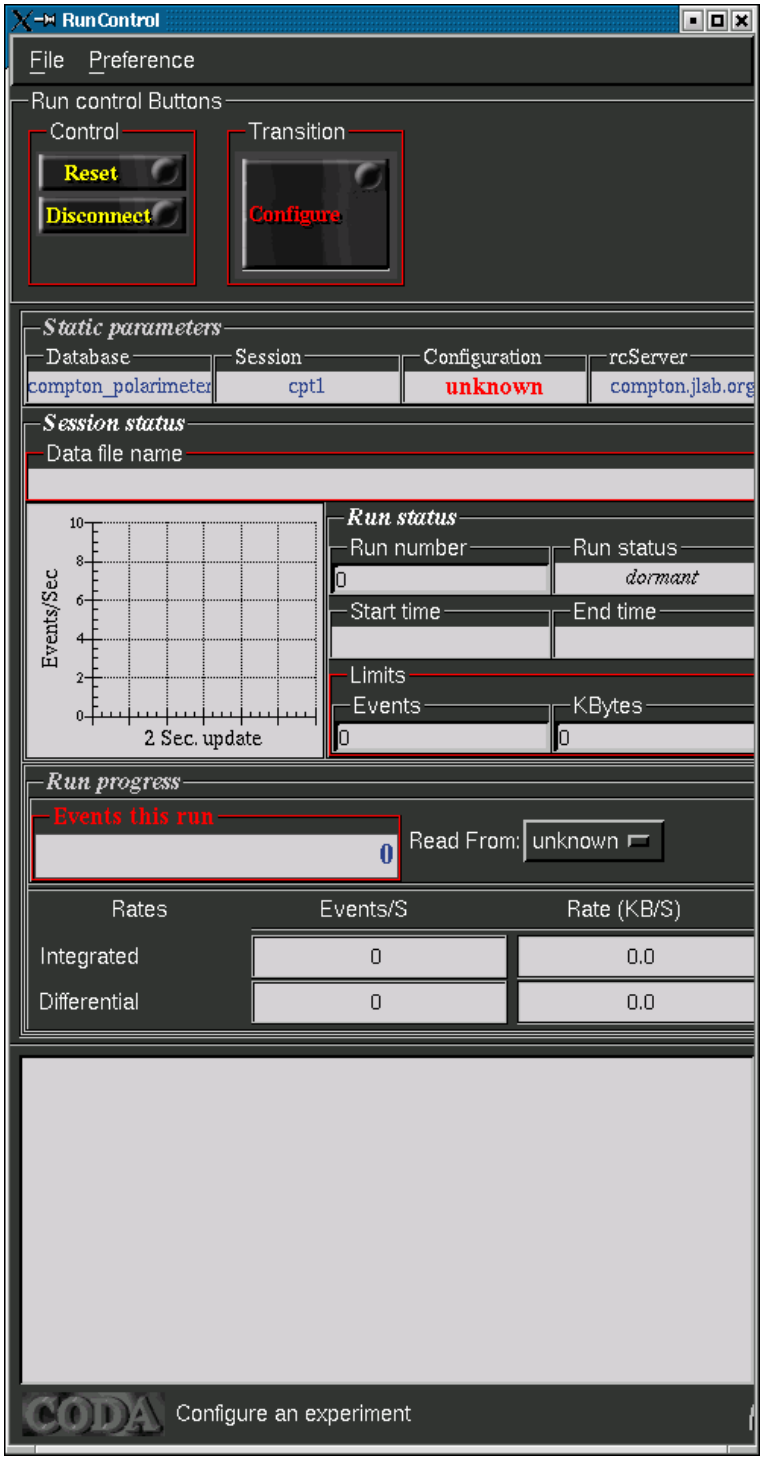

Figure 9.8: Compton DAQ setup: *configure*

Figure 9.9: Compton DAQ setup: *run type*

the counting rates distribution
the number of events in this run is updating
the run status *active*
the run number updated

- To end a run, click on End Run (Fig.9.12) button to stop the acquisition.

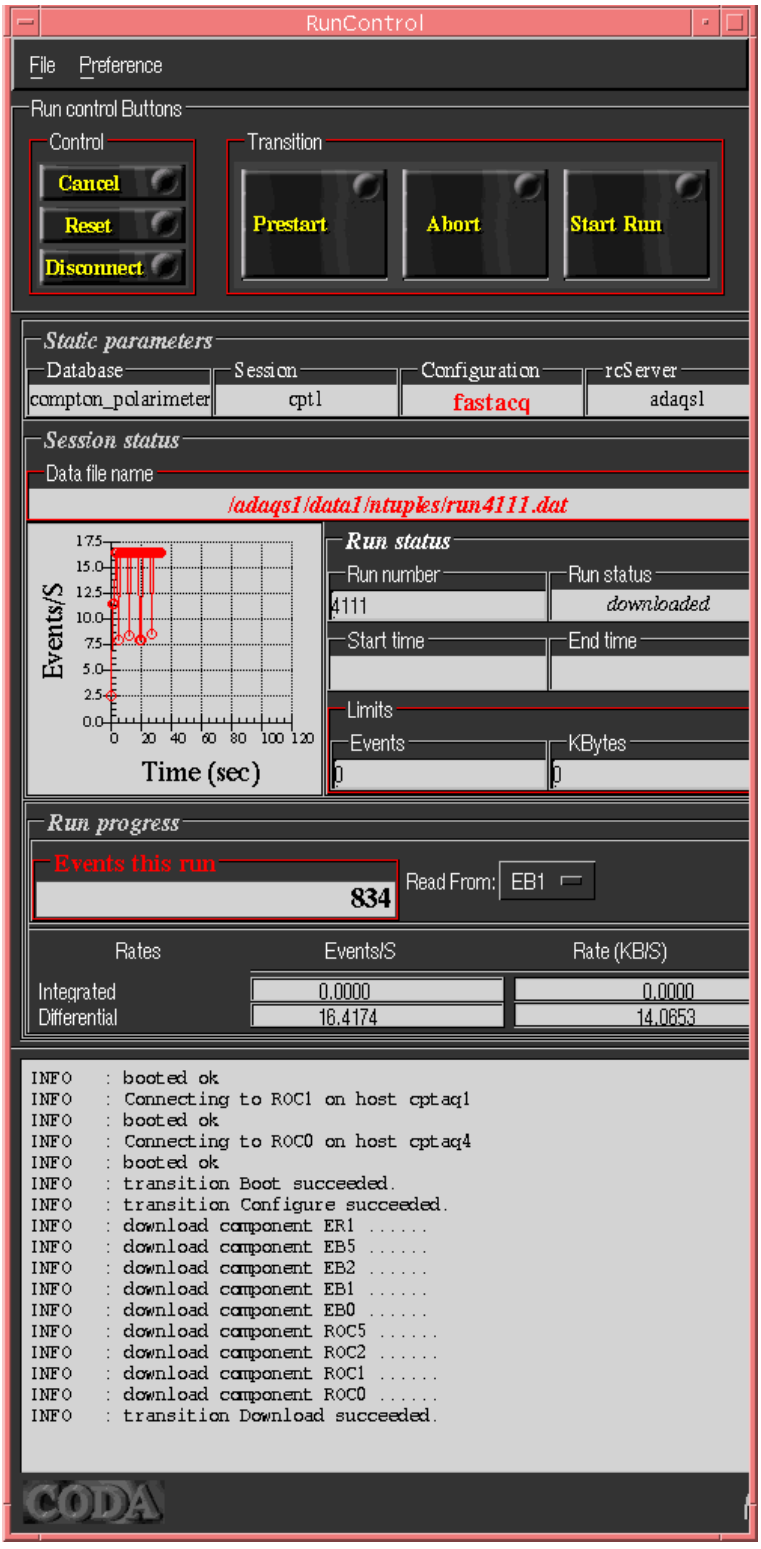

Figure 9.10: Compton DAQ setup: *download*

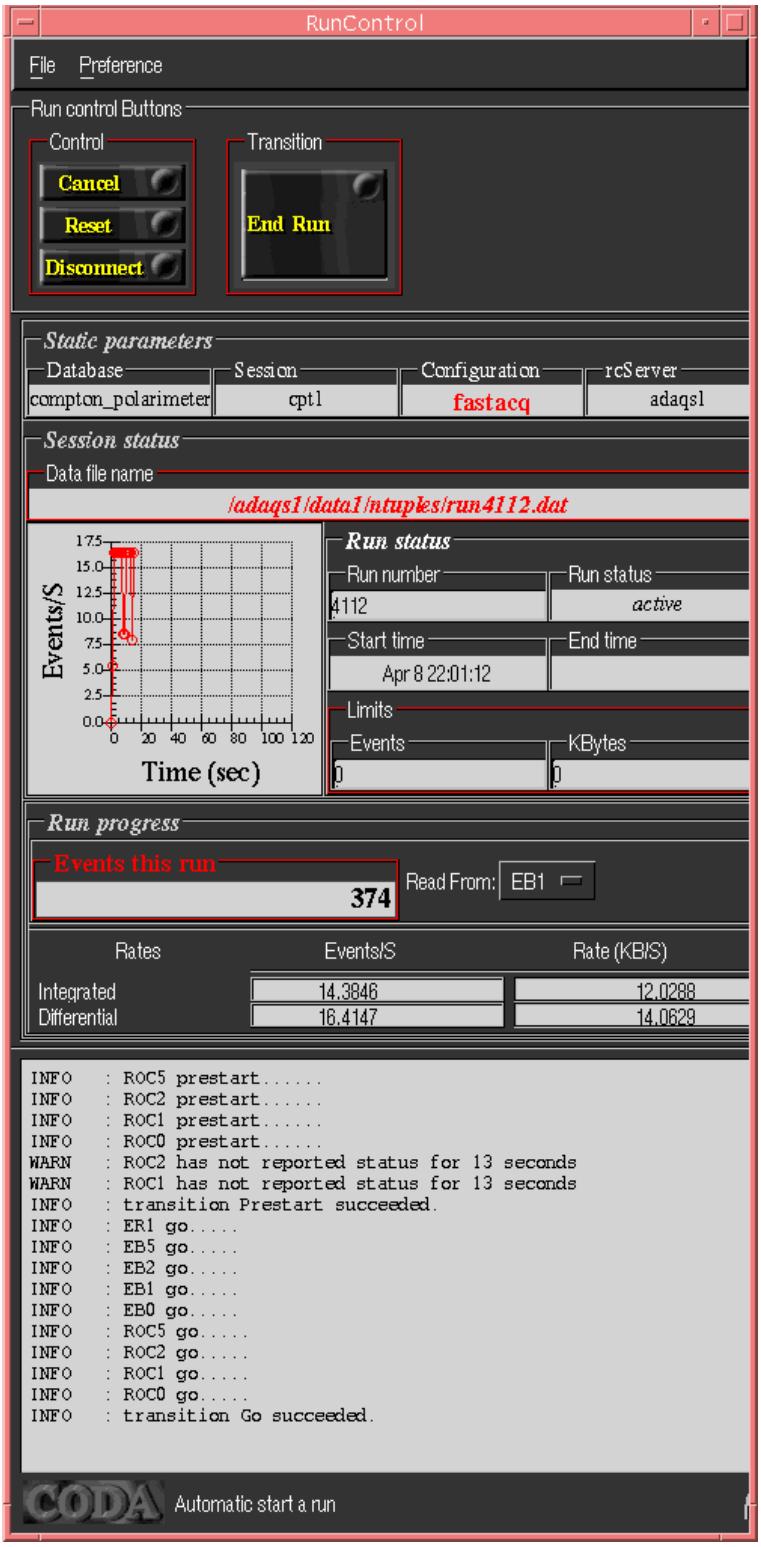

Figure 9.11: Compton DAQ setup: *start*

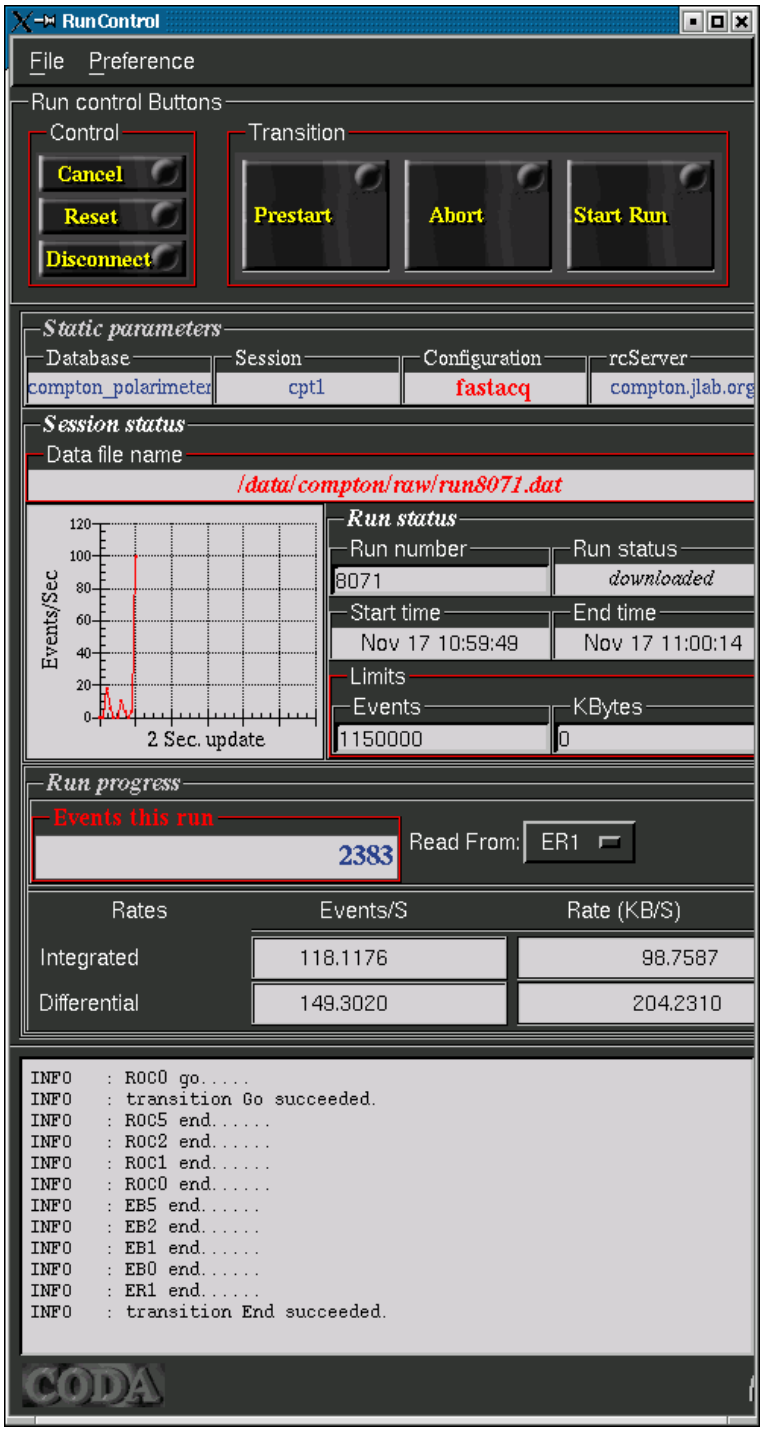

Figure 9.12: Compton DAQ setup: *end*

- **Start the acquisition control panel**

  In a fresh terminal window, excecute the command to start the spy acqusition control panels

  ```
  $ spy_acq
  ```

  Don't be surprised. 7 windows will be open but regroup in only one within few seconds. From time to time, it may happen that one window does not go inside spy_acq window. Click on the corresponding widget.

- Check the High Voltages applied on the Photon detector PMT's. Go to the "Acq" panel where spy_acq is currently runnning, Go in the Logbook panel and select photon detector. You will get the the panel shown in Fig.9.13 with the high voltages values:

- If the HV are off, switch them on.
  The cards of the COMPTON Polarimeter PMT HV are located in crate #2 telnet hatsv5 2011, then 1450, vt100 and usual display.

  High Voltage channel for the Compton polarimeter are in cards # 12, 13, 14 and 15. Typical HV for Beam Diag and Cristal PMTs is 1500 V. The voltage of the monitoring LED (channel 15.10) should stay in the range 110-130 V.

  NB: Only one user can connect on hatsv5 at the same time!! If you can't connect check if others are logged in. See also procedure posted in rack #CH01B05.

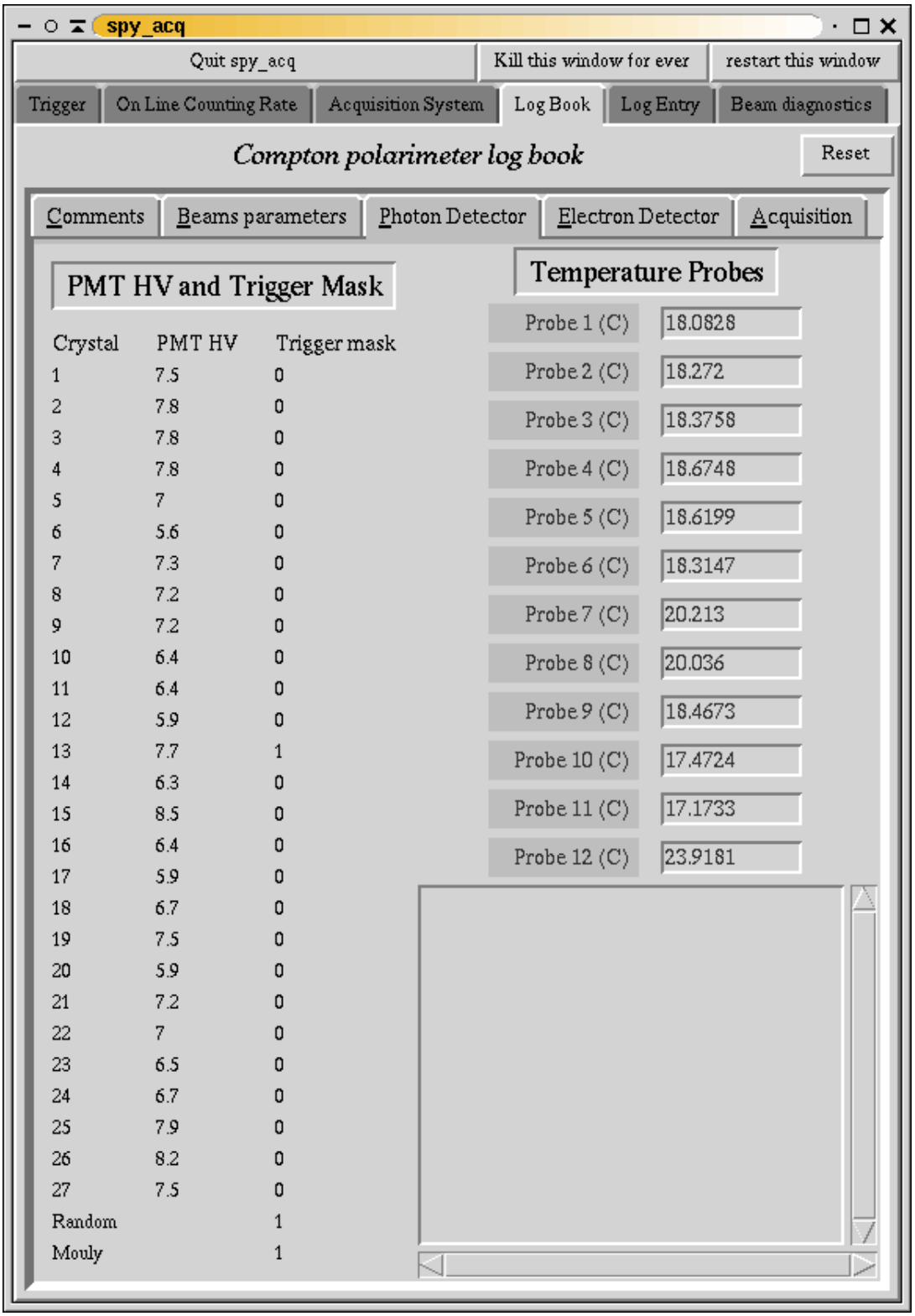

Figure 9.13: spy_acq high voltage status panel

9.4.2 Cavity Setup

Choose the EPICS desktop and in a fresh terminal window and start the MEDM [18] EPICS panel by executing the command:

```
$ epicshall
```

This will open the main EPICS menu for the Compton as shown in Fig.9.14.

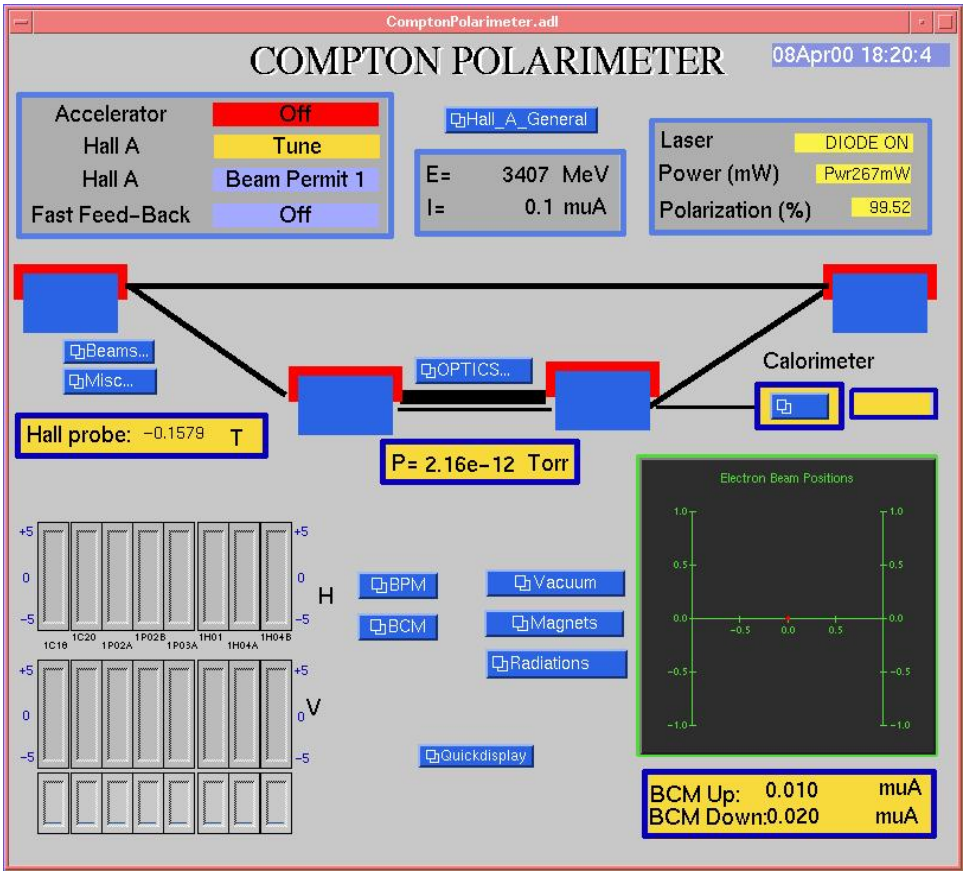

Figure 9.14: Compton polarimeter main EPICS control panel

- **Switch on the laser**

  On the EPICS control panel, pull the "OPTICS" menu down. Click on "Mini Optic" (see Fig.9.15).

  To turn the Laser On .... Click on the Laser On button.
  Check LASER STATUS and INCIDENT POWER.
  A Laser spot may blink on the CCD control TV screen

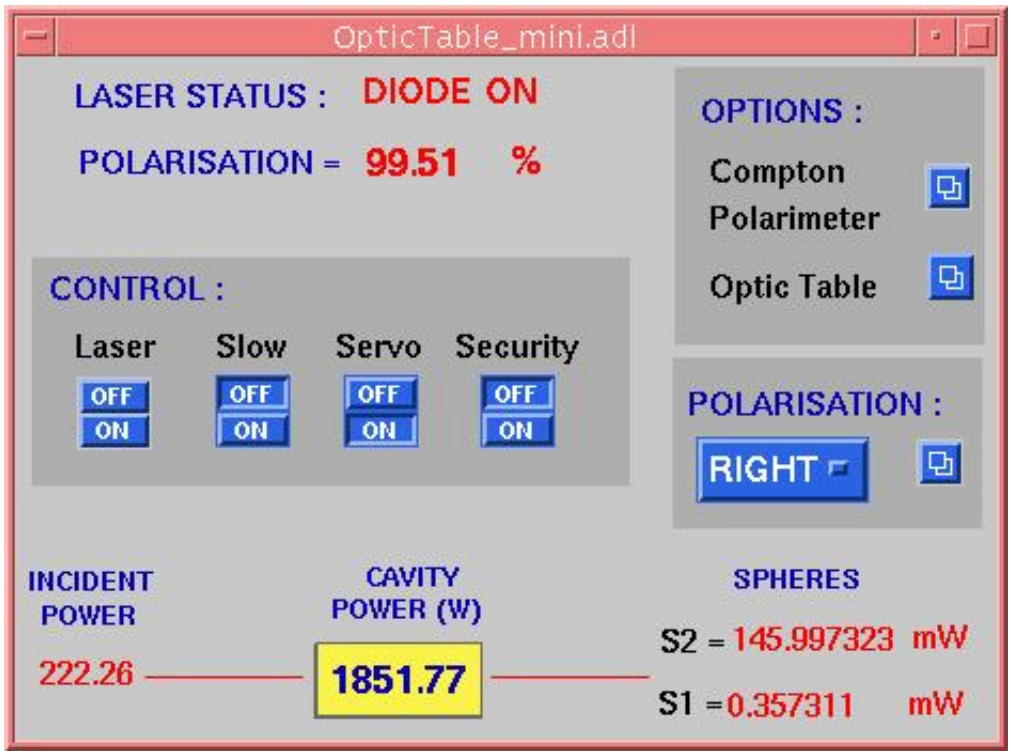

Figure 9.15: Compton polarimeter mini optics control panel

(second from left among the 4 screens)
and you should see a bright spot on the miror control TV screen labelled "laser." (see Fig.9.16).

Figure 9.16: TV viewer images of laser spot

If Laser doesn't turns ON most problable problem is an interlock fault. You need an access in Hall A and check the different parts of the laser interlock around the optic table:
Two crash buttons on the left wall, inside and outside the green tent.
The optic table is protected by a metallic cover. Four magnetic switches connect the top and the walls of this cover. Some of them might be opened. **CAUTION!!**: you are standing close to the optic table. Do not try to open the cover. Just move the top carefully sideways to try to close the switches.

- **Lock the cavity**

To lock the cavity click on the Servo On button shown in Fig.9.17. You should see the cavity locking on the CCD control TV as in Fig.9.18, and you should have more than 1000 W stored in the optical cavity.

If it isn't the case, turn on the Slow Ramp and then Click on the Slow On button shown in Fig.9.19.

If successfull you can turn OFF the Slow Ramp button.
Photons are now ready to meet electrons and give some Compton photons children.

If the cavity still doesn't lock after few minutes with SERVO and Slow Ramp ON: Check the Yokogawa generator in the Compton rack (CH01B00). Frequency should be 928 kHz, Amplitude 80 mVpp and phase -4 deg. Pull down the OPTICS menu in the main epics window. Click on "Optic table" and then on "Servo". The laser servo control panel appears as shown in Fig.9.20 Gain should be close to 167. A

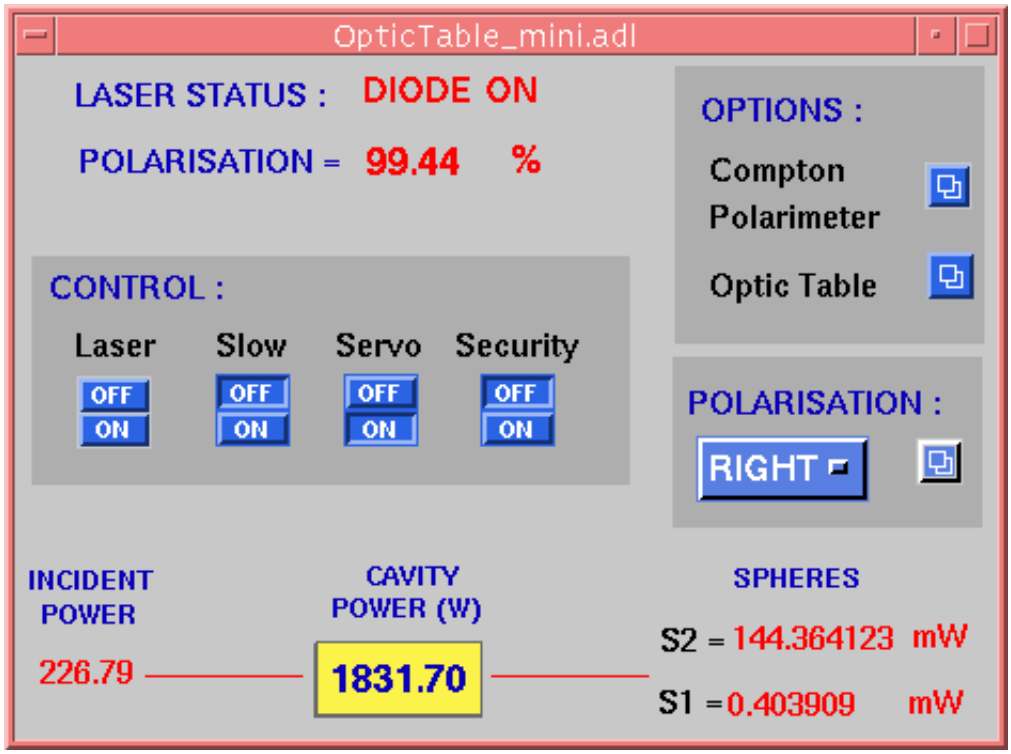

Figure 9.17: Laser servo control

Figure 9.18: Compton cavity lock indicator

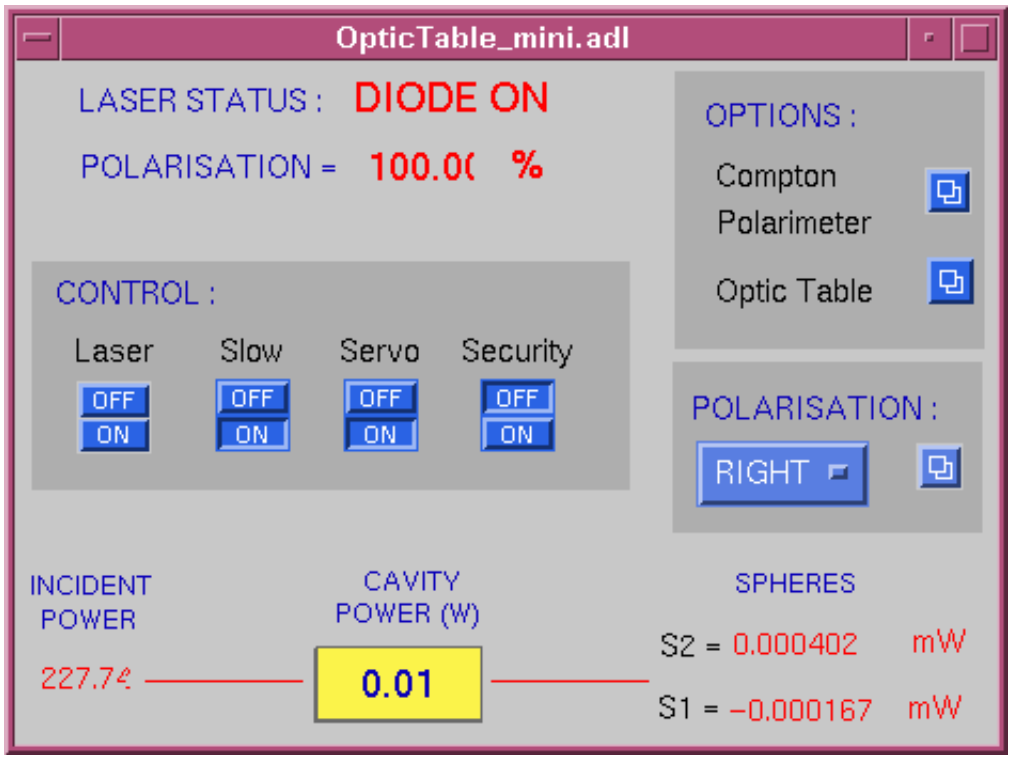

Figure 9.19: Compton Laser slow ramp control

too high traking level in the feedback can prevent the cavity from locking. Bring the "tracking Level" cursor down to low values (0.20 - 0.40) and try to lock again with Servo and Slow Ramp on.

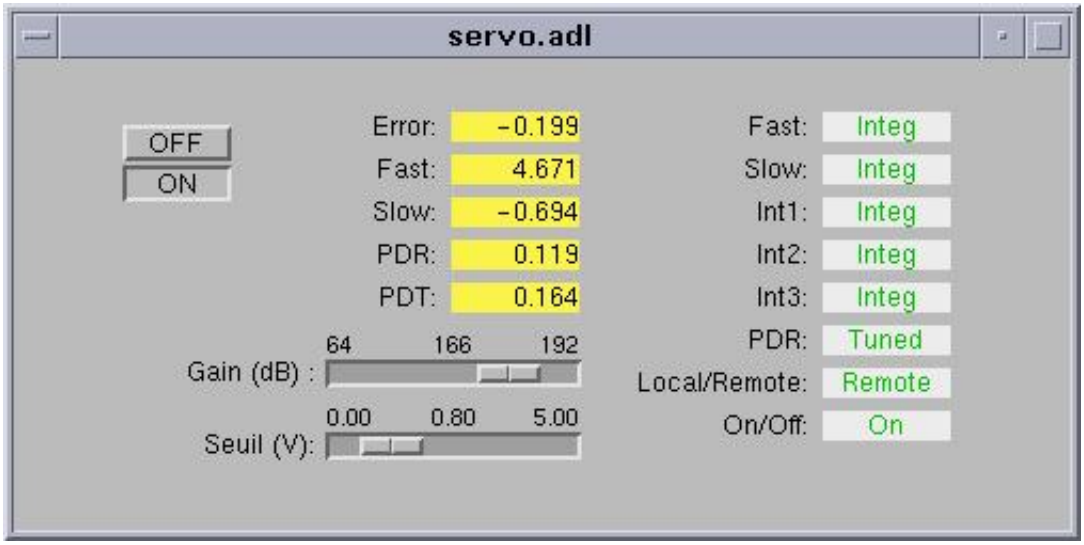

Figure 9.20: Compton Laser servo control

- **Unlock the Cavity**

  On the EPICS control panel, pull the "OPTICS" menu down. Click on "Mini Optic"

  To unlock the cavity, click on the Servo off button as shown in Fig.9.21.

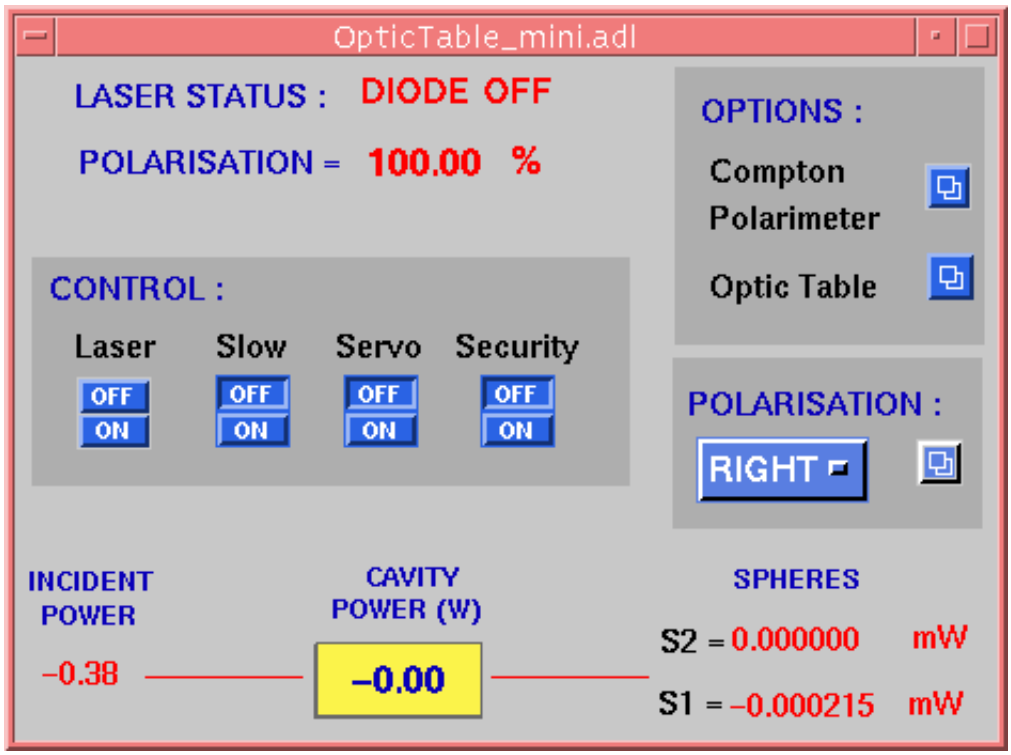

Figure 9.21: Compton Laser control setup to unlock the cavity

9.4.3 Electron Detector Setup

- **Turn on the electron detector**
  The detector system needs to be powered. In hall A there is an electrical box called A-UH-B1 left of the stairs going to the tunnel (see Fig.9.22) In this box, the main power switch for the electron detector is number 21 (it says electron detector on it). It must be on turned ON. In the tunnel, there is a crate attached to the wall above the electron detector, it also needs to be turned ON. When it is ON a red LED is lit (at the right end of the crate). Below this crate there is a black electrical box controlling the displacement system. On the left side of this box it should say "Idle".

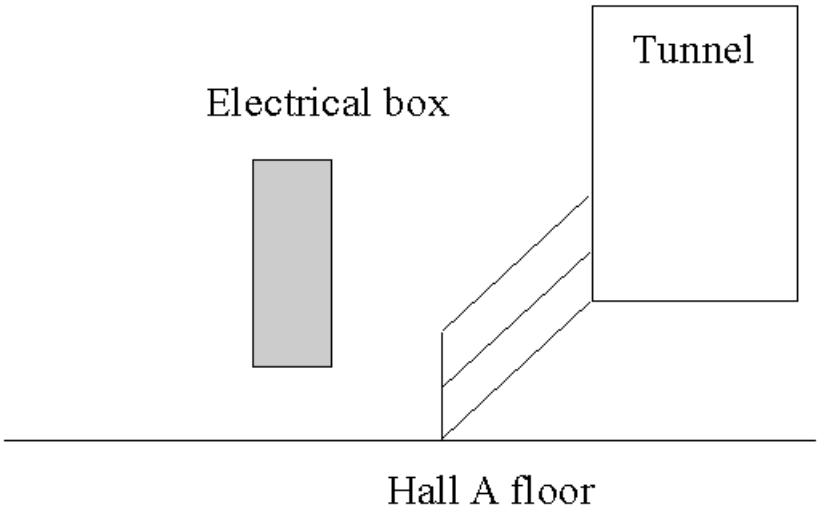

Figure 9.22: Location of the electron detector circuit breaker

- **Slow control of the electron detector**
  To perform operations on the electron detector. Open the MISC... screen from the main Polarimeter EPICS screen and then choose "Electron Detector". On this screen, ashown in Fig.9.23, active buttons appear in blue and readback values appear on a yellow background. To use the electron detector a high voltage (80 V) must be applied to polarize the silicon microstrips and a low voltage must be provided to the preamplifier circuit board and some threshold must be set for each plane for the detection of the signals. To do this execute the following operations :

  Turn the low voltage ON
  Turn the high voltage ON. The return value should increase gently to 80.
  Set thresholds to 35. The return value should read 35.
  Turn calibration OFF.

The electron detector can be put in data taking position remotely. When the detector is inserted **the chicane must be ON**, when it is being moved **the beam must be OFF too**. If it is not the case the detector will eventually be destroyed.

Click on either "garage" or "beam" depending on where you want to put the detector.
To make sure the detector is where you want watch the detector move on the TV screen (there is one in tha Hall A counting house and one in the back room). The switches readback must oscillate a little bit if the system is running properly.

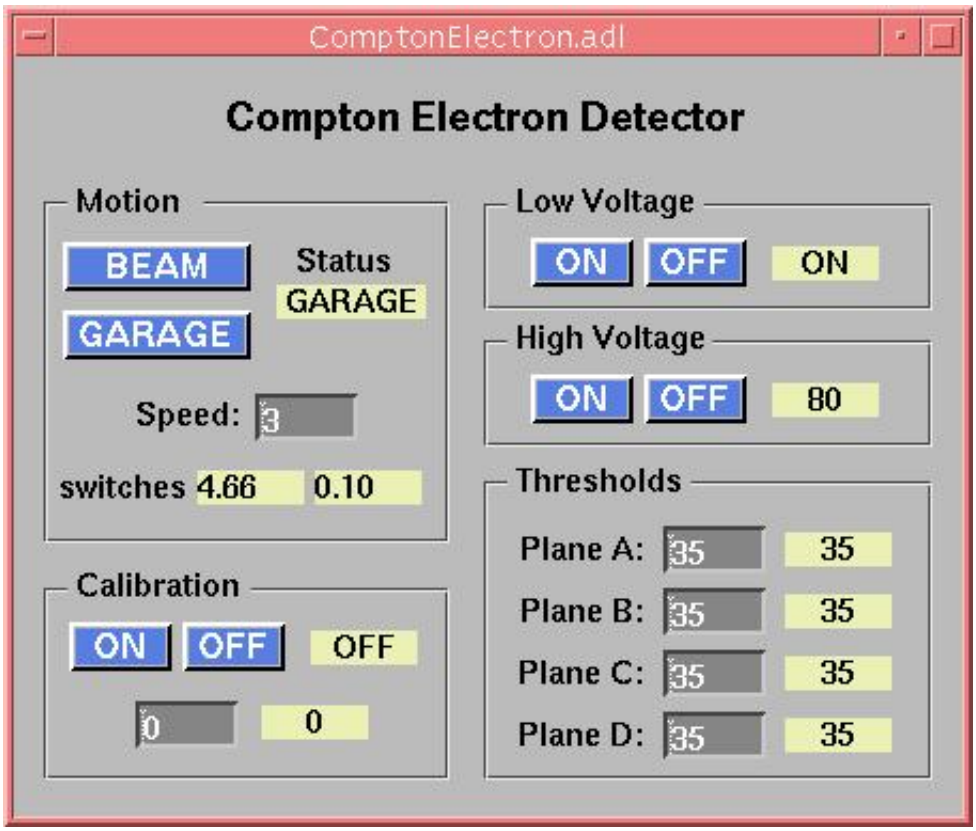

Figure 9.23: Compton electron detector control panel

The electron detector must be on the garage position.

Check the status of the electron detector on
the video screen shown in Fig.9.24. The arrow must be exactly in front of OUT (outside) nominal position.

- **Switch on the the Compton chicane**

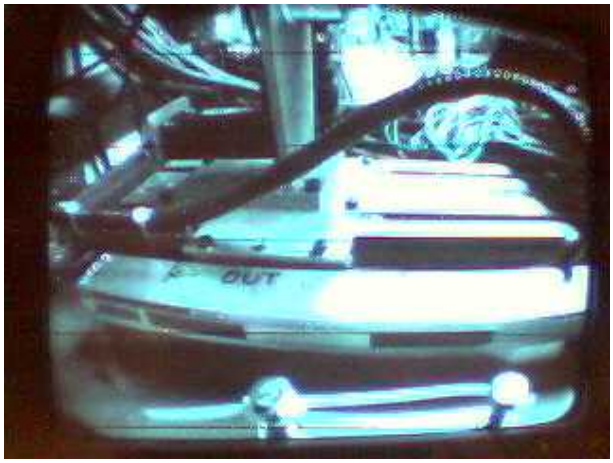

Figure 9.24: Compton electron detector TV viewer

This procedure is only performed by MCC operators.

First of all, the Hall A Run Coordinator must request that MCC tune the beam through the Compton chicane. MCC operators have to apply the section 2 of the procedure MCC-PR-04-001. If necessary (after a long shutdown for exemple), let's remind to the operator to open valves located on the Compton line. The complete procedure is available on the MCC web site
at this URL

- **Lock once again the cavity**

9.4.4 Vertican Scan

Perform a vertical scanning of the electron beam inside the magnetic chicane in order to maximize the counting rates in the Photon detector.

In the case the crossing of the electron and Laser beams has been lost, or is not optimal, a "Vertical scan" has to be performed. By stepping the magnetic field of the chicane dipoles, the beam is moved vertically. Step size should be small with respect to the laser spot size ($\tilde{1}$00 micro m). Here are some step sizes corresponding to a **25 or 100μm** vertical displacements versus typical beam energies, MCC operator are used to Gauss.cm unit:

Although the procedure is non-invasive for Hall A, let the shift leader know when you start and finish the scan.

The scan is done in contact with MCC (7047) by checking the online evolution of the counting rate using "spy_acq". The optimal Y-position is at the upper part of the bell appearing on the middle of the spy_acq picture (see Fig.9.25) ("**Counting Rates**

step 25μm	step 100μm	Energy
10 G.cm	40 G.cm	0.8 GeV
20 G.cm	80 G.cm	1.6 GeV
30 G.cm	120 G.cm	2.4 GeV
40 G.cm	160 G.cm	3.2 GeV
50 G.cm	200 G.cm	4.0 GeV
60 G.cm	240 G.cm	4.8 GeV
70 G.cm	280 G.cm	5.6 GeV

Table 9.1: Chicane vertical scan step values for various energies.

versus DAQ Y at vertex"). As a first pass, one can use bigger step size to locate the maximum and then go back to small steps to fine tune the position.

When this procedure is over, come back to the right Y-position and ask to the machine operator to lock the Y-position of the beam. Then an automatic magnetic feedback will run to keep the electron beam Y-position within 50 micro m of this optimal position. Click on **Set X** and **Set Y** buttons in the frame "Beam drift alarm on Epics pos at vertex". Click on **Alarm ON** to set it green. It will bip when the 50 micons limit is reached. This is an important task to avoid sensitivity to beam position false asymmetry.

- **Ask to the MCC operators to switch the beam off.**
- **Insert the electron detector in the beam line.**

  First of all, the electron beam must be off (see Hall A run coordinator and call MCC operator) If it is not the case the detector will eventually be destroyed. To perform operations on the electron detector. Open the MISC... screen from the main Polarimeter EPICS screen and then choose "Electron Detector" to get the panel shown in Fig.9.23.

  Click the "beam" button.
  To make sure the detector is where you want watch the detector move on the TV screen (there is one in tha Hall A counting house and one in the back room). The switches readback must oscillate a little bit if the system is running properly.

  Finally, Ask to the MCC operators to switch the beam on.

9.4.5 Taking data

This is a list of check points to run Compton. It assumes the polarimeter has already been started up as described in the previous sections and that a run has just ended and you want to take a new one.

Bring up the following three screens to control the data taking:

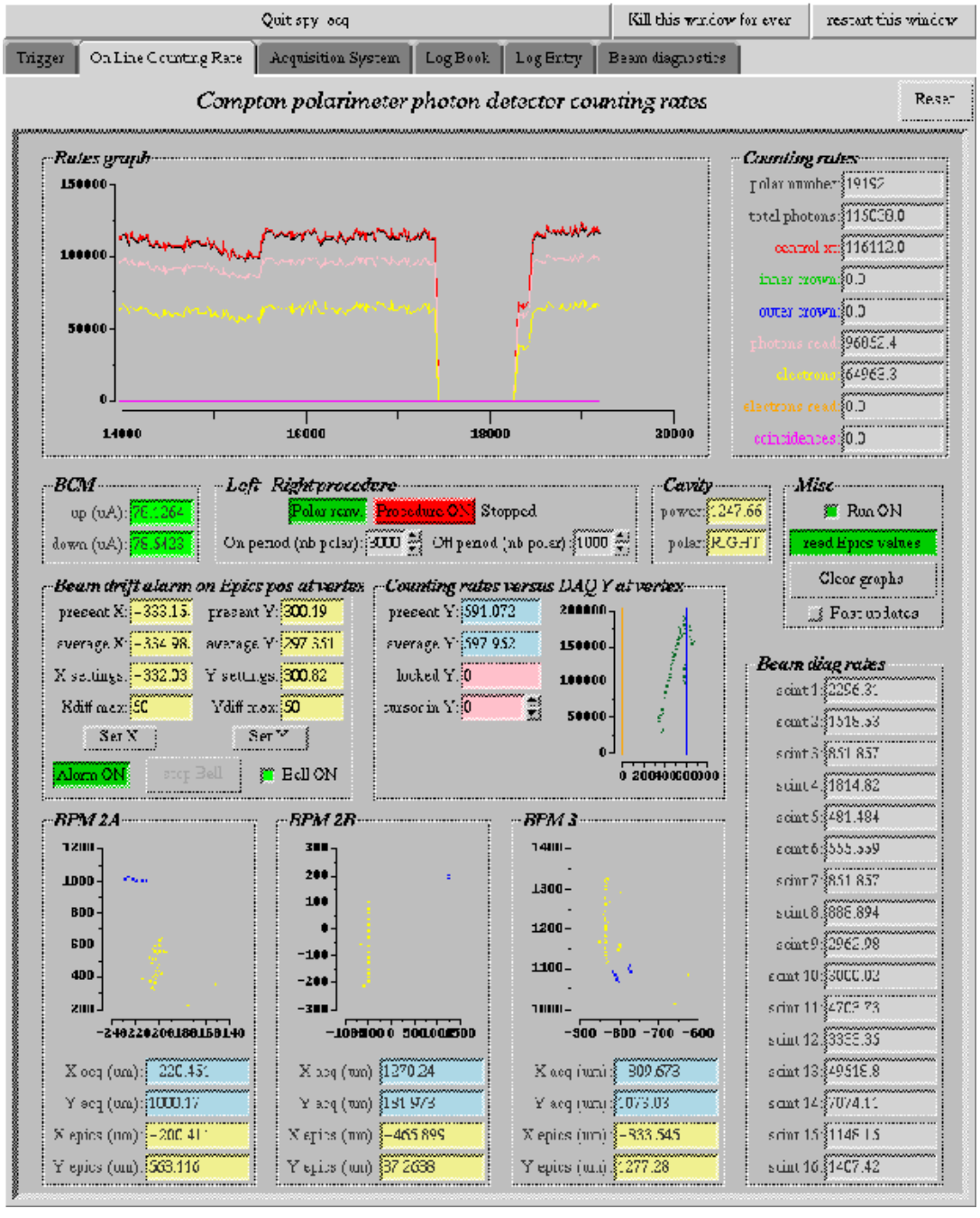

Figure 9.25: Vertical scan trace in spy_acq panel

- **EPICS screen**: slow control for the optic table + cavity, the photon and electron detectors, beam parameters.
- **Acq screen**: runcontrol and spy_acq display.
- **Netscape screen**: Electronic logbook of the Compton polarimeter, check histograms.

Follow the following procedure:

- Go to the **EPICS screen**, check the cavity is loocked with $\tilde{1}$200 Watts or more.
- Go to the **Acq screen** and click on the **Trigger window** in spy_acq.
  - Check Random, Mouly and central cristal are activated.
  - Check **Raw data rates**. Assuming a trigger rate of 1kHz/muA, prescaler factors should keep the read data rates at the few kHz level.
  - Check the trigger condition in **General Daq setup** (Photon only, e only, coinc, ...).
- Check the state of the acquisition in the **Acquisition system window** of spy_acq. After an "End run succeded" each module should be in "downloaded" state. *If not, follow error messages displayed in the bottom window. Most of the problems are fixed by clicking on Reset or Reboot + Download buttons. Display needs some delay to refresh after these actions. Don't click like crazy on every enabled button. If everything is stuck try "restart this window" in the spy_acq menu to refresh the display.*
- Click on **Start Run** in the **Runcontrol window**. Check that each module of the acquisition goes from downloaded to paused and then active state.
- Click on the **Online Counting Rate window** in spy_acq. Check the rate in the central cristal (red curve) is close to the optimal value from the last vertical scan (it should be around 1kHz/muA). *If counting rates are low and Beam Drift Alarm keeps ringing, the crossing of the electron and Laser beams is not optimal. Stop the run and perform a vertical scan.*
- Start the photon polarization reversal by clicking on **Procedure ON** in the **Left-Right procedure** frame. Periods of cavity ON and OFF will alternate, starting with OFF (bkg measurement).
- Take a **$\tilde{1}$ hour run**.
- Before ending a run, fill up the **LogBook window** in spy_acq (name, run type, title). Ensure the Logbook and Checklist buttons are not inhibited if you want the run to be analysed and stored in the electronic logbook.

- Click on **End Run** in the **runcontrol window**. Look for the "End of run succeeded" message in the bottom frame. *If End of run failed, go to Acquisition system in spy_acq and follow error messages.*
- A **yellow window** should pop up for few second after the end of run indicating that the run is saved and the online analysis (checklist) is runnig.
- Go to **Netscape screen** and reload the **Compton logbook web page**. Last run should appear on the first line.
- By clicking on **more** you access to detailed informations about the running conditions as well as to control histograms generated by the **checklist** script. This script may take few minutes to run. **It is important task to check the control histograms after each end of run. Quality off the data depends on it.** See section "Control Histograms".
- Go to first point, **start a new run**.

Two kinds of alarm can turn ON during data taking:

- **Y Position:** Go to **On Line Counting Rate window** in spy_acq and check the "Beam drift alarm" frame. If the "Average Y" differs to "Y settings" by more than 50 microns, Alarm is ringing and stop bell button is red. Click on stop bell and wait few seconds to see if the position feedback brings Y back to its nominal value. If it doesn't, call MCC (7047) and ask them to check if the position feedback on Y in the Compton chicane is still running. If necessary stop the run, perform a vertical scan and re-lock the vertical position at the new optimal value.
- **DAQ system:** If something goes wrong in the DAQ system during data taking you should see an effect on the "photon read" counting rate. Go to **Acquisition system** window in spy_acq, click on stop bell button if alarm is ringing. End Run in runcontrol window. Follow error messages displayed in spy_acq to fix the problem.

ADC spectrum of the photon detector should show the pedestal peak (pink), the diode signal (green), Compton + background spectrum (blue). Gain has to be adjusted so that the Compton edge is between 1/2 and 2/3 of the ADC range.An automatic fit procedure substracts the background and calibrate the threshold value using the Compton edge. If the fit doesn't succeed it won't affect the quality of the data but prevents further online analysis. Call a Compton expert to fix it.Typical experimental Compton asymmetries are of the order a 1%. Check the electron beam current asymmetry stays below few 100 ppm.**Vertical position** of the electron beam is the **most important parameter**. It drives our luminosity (electron and Laser beam crossing) as well as our sensitivity to beam position differences correlated with the helicity. Check we spend most of the running time at the **optimal Y position**, which is at the **summit of the bottom left curve (counting rate % Ybpm)**. If the most probable position is off by more than 50 micron, perform a vertical scan.

Any comment about the running conditions, shift summary, ... are welcome to help the offline analysis. You can insert them in the Compton electronic logbook by filling up the **LogEntry window** in spy_acq. Click on **Submit** to dowload your comments in the logbook.

9.4.6 Turning off the compton polarimeter

- Stop the magnetic chicane

  This procedure is only performed by MCC operators.

  First of all, the Hall A Run Coordinator must request that MCC tune the beam through the Compton chicane. For a foreseen shutdown or maintenance days, you do not need this step.

  MCC operators have to apply the section 3 of the procedure MCC-PR-04-001. Let's remind to the operator to close valves located on the Compton line. It is very important to keep the best vacuum in the Compton line and avoid dust deposit on the high reflectivity mirrors of the cavity The complete procedure is available on our web site at :

  http://hallaweb.jlab.org/compton/Documentation/Procedures/compton_off.frm.ps

- Set the electron detector on the GARAGE position

  First of all, the electron beam must be off (see Hall A run coordinator and call MCC operator) If it is not the case the detector will eventually be destroyed. Open the MISC... screen from the main Polarimeter EPICS screen and then choose "Electron Detector". On this screen, active buttons appear in blue and readback values appear on a yellow background. This screen is also reachable, by loading the file ComptonElectron.adl located under the home directory of hacuser on the hac computer.

  Click on "garage" button.

  To make sure the detector is where you want watch the detector move on the TV screen (there is one in tha Hall A counting house and one in the back room). The switches readback must oscillate a little bit if the system is running properly.

- Switch off the PMT High Voltage of the photon detector

  The cards of the COMPTON Polarimeter PMT HV are located in crate #2 telnet hatsv5 2011, login:adaq, paswd:*ask people on shift*then 1450, vt100 and usual display.

High Voltage channel for the Compton polarimeter are in cards # 12, 13, 14 and 15. Switch off all the channels.

NB: Only one user can connect on hatsv5 at the same time!! If you can't connect check if others are logged in. See also procedure posted in rack #CH01B05.

- Unlock the cavity
  On the EPICS control panel, pull the "OPTICS" menu down.
  Click on "Mini Optic".
  To unlock the cavity, click on the Servo off button.

- Switch off the laser
  On the EPICS control panel, pull the "OPTICS" menu down.
  Click on "Mini Optic".
  To turn the Laser Off .... Click on the Laser Off button. Check LASER STATUS and INCIDENT POWER.
  The Laser spots would switch off on the CCD control TV screen

9.5 Safety Assessment

9.5.1 Magnets

Particular care must be taken in working in the vicinity of the magnetic chicane dipoles of the compton polarimeter as they can have large currents running in them. Only members of the Compton polarimeter group are authorized to work in their immediate vicinity, and only when they are not energized. As with all elements of the polarimeter which can affect the beamline, the magnets are controlled by MCC. All four dipoles are powered in series from a common power supply. The power supply for the dipoles is located in the Beam Switch yard Building (Building 98). The maximum current for the dipole is 600A. There is a red light which indicate the status of the dipoles. The warning red light is activated via a magnetic field sensitive switch placed on the coils of one of the dipole. Lock and tag training is required of all personnel working in the vicinity of the Compton magnets.

9.5.2 Laser

The primary hazzard in the optical table of the compton polarimeter is the Class IIIB, 240 mw CW infra-red laser. It is housed in the tunnel in a laser safety enclosure interlocked with the laser power. Welding curtains are provided on all sides to isolate the laser enclosure from other pathways. A flashing yellow beacon installed in the tunnel indicates laser on status. Three crash buttons are provided in the tunnel for emergency shutdown of the laser.

All functions of the laser are remotely controlled and personnel access to the laser "hut" is not necessary during routine operation of the compton polarimeter. However, in case of repair or mainetance work, access to the laser enclosure may be necessary. The safe operating procedure for this laser is described in Jeffeson Lab Laser Standard Operating Procedure (LSOP) 101-2-99-1-4. A copy of the LSOP is available in the tunnel wall next to the laser hut. Only personnel aouthorized in the LSOP are permitted to access the laser hut.

9.5.3 High Voltage

There are 25 photomultiplier tubes within the compton photon detector module. Each tube is connected to a high voltage power supply located in the beamline instrumentation area with SHV cables. The maximum voltage is 3000 Volts. The high voltage supply must be turned off prior to accessing any of the photon detector elements for servicing purposes. Only members of the Compton group are authorized to access the detector.

9.5.4 Authorized Personnel

The list of the presently authorized personnel is given in Table 9.2. Other individuals must notify and receive permission from the contact person (see Table 9.2) before adding their names to the above list.

Name (first,last)	Dept.	Call [4]		e-mail	Comment
		Tel	Pager		
Sirish Nanda	JLab	7176	584-	nanda@jlab.org	*Contact*
Jack Segal	JLab	7242		segal@jlab.org	Technical
Joseph Zhang	JLab	5575	584-	shukui@jlab.org	Optics
Martial Authier	CEA	4324 [19]		mauthier@Cea.Fr	Engineering
Nathalie Colombel	CEA	8350 [19]		ncolombel@Cea.Fr	Mechanical
Pascale Deck	CEA	2426 [19]		pdeck@Cea.Fr	Electronics
Alain Delbart	CEA	3454 [19]		adelbart@Cea.Fr	Optics
David Lhuillier	CEA	OFF		david@jlab.org	Analysis
Yves Lussignol	CEA	2828 [19]		lussi@Cea.Fr	EPICS
Damien Neyret	CEA	OFF		neyret@jlab.org	DAQ
Gérard Tarte	CEA	8464 [19]		gtarte@Cea.Fr	Electronics
Christian Veyssière	CEA	9704 [19]		cveyssiere@Cea.Fr	Electronics

Table 9.2: Compton Polarimeter: authorized personnel

Part III

Targets

Chapter 10

Overview [1] [2]

Three types of mutually exclusive target systems have been used in Hall A:

1. a system of cryo-targets and solid targets;
2. a waterfall target;
3. a target of polarized gaseous ^{3}He.

The set of cryogenic targets currently operates with liquid hydrogen, liquid deuterium and gasous helium 3 or helium 4 as target materials. A variety of solid targets are also provided; BeO, Carbon and Aluminum are typical but other self supporting materials are available if need arises. The combination of cryogenic targets and a few solid targets is the standard configuration.

A waterfall target was used during the commissioning of the hall spectrometers and for hypernuclear experiments. This system also requires a special installation.

In addition, there is a large program based on polarized ^{3}He. This is a special installation and hence is not available at the same time as the cryogenic target system.

Each of these systems is discussed in following chapters.

[1] *CVS revision* Id: overview.tex,v 1.11 2008/04/18 20:05:18 jpchen Exp

[2] Authors: J. P. Chen jpchen@jlab.org

Chapter 11

Cryogenic Targets [1] [2]

11.1 Procedure for Normal Running of the Hall A Cryogenic Targets

This procedure provides guidelines for the everyday running of the Hall A cryogenic Hydrogen and Deuterium targets.

11.1.1 Introduction

The Hall A cryotarget system contains three target loops. The top loop (loop 1) often has a single helium cell, which will be filled with either ^{3}He or ^{4}He gas with pressure up to 15 atm (about 220 PSIA). For normal Hydrogen and Deuterium running, the top loop is often leave as a spare, in which case it will be filled with a little over one atm helium gas. Each of the middle and the bottom loop often contains two target cells with different sizes, for example, one 15 cm and one 4 cm cells. The middle loop (loop 2) is usually filled with liquid Hydrogen during normal operation. The bottom loop (loop 3) is usually filled with liquid Deuterium during normal operation. If only the Hydrogen target is used, loop 3 (the Deuterium loop) will be filled with a little over one atm helium gas to prevent air leaking into the cell.

During the normal operation, the Hydrogen and/or Deuterium target should have already been liquefied and are in a stable state of about 2 to 3 degree sub-cooled liquid. The normal operating conditions of the targets are given in Table 11.1. Also listed in Table 11.1 are the freezing and boiling temperatures. These parameters should be reasonably stable (temperature to ± 0.1 K, pressure to ± 1 psi) provided that the End Station Refrigerator (ESR) is stable. The temperature is controlled by a software PID loop with a high power heater (up to 700 Watts). The PID loops read the output of one of the Cernox resistor temperature sensors and adjust the power in the high power heater appropriately. The control loops function extremely well and the temperature

[1] *CVS revision* Id: cryotarget.tex,v 1.13 2008/04/21 21:11:06 jpchen Exp

[2] Authors: J. P. Chen jpchen@jlab.org

hp

Target	Temperature ($^\circ K$)	Pressure (PSIA)	Freezing T ($^\circ K$)	Boiling T ($^\circ K$)
H_2	19	25	13.86	22.24
D_2	22	22	18.73	25.13

Table 11.1: Normal operation conditions of the cryo-target cells

fluctuations with steady beam are typically measured in hundredths of degrees. During beam off- beam on transitions high power fluctuations of a few tenths of a degree are not uncommon.

Graphical User Interface

The principal interface with the target is through the Graphical User Interface (GUI), of the control system. Every target operator should be familiar with the short version of the GUI manual. The long version can be used to find more details or for reference.

11.1.2 Alarm Handler

It is *mandatory* to have an alarm handler,ALH, running at all times. Further, it is *mandatory* that the alarm handler be visible in all work spaces on the target control computer. Even though the target safety is ultimately insured by mechanical measures, the alarm handler can save you lots of time, grief and potentially prevent problems with data. The ALH will alarm if any of its parameters goes out of normal range. Servicing the alarm is the responsibility of the target operator. At high beam current, the ALH will usually alarm when the beam goes from on to off or from off to on, since the temperature change is out of normal range. The ALH can also repeated alarm if there are noisy analog channels. If the AH alarms repeatedly or the cause of the alarm is not clear, the target operator should contact the on-call target expert.

11.1.3 Target Motion and Fast Raster

The target motions are interlocked with the machine Fast Shut Down (FSD) system. Therefore, it is *mandatory* that you call MCC so that they can remove beam from the Hall and mask our FSD node *before* using *any* target motion mechanism.

When full power beam with tiny beam spot hit the cryotarget, there is a danger that the beam can melt the target cell. The fast raster is used to prevent this from happening. Every time when moving the cryotarget into beam position, the target operator *must check to make sure* that the faster raster is on and has a reasonable size for beam current above 5 μA.

11.1.4 Cryogenic Consumption

The ESR is not a bottomless reservoir of helium coolant. Every effort should be made to keep our consumption within reasonable bounds. This means that heater overheads should be tens and not hundreds of Watts and that loops which will be dormant for extended periods should be powered down as much as possible. If you feel that the cryogenic consumption is too high (or have received complaints from another ESR user) and are uncertain about the appropriate action contact the on-call target expert.

11.1.5 Checklist

The Hall A target experts and the JLab target group like to track the state of the target. To help them in this task the target checklist *must be Elog the charts and the main target page once per shift.*

11.1.6 Target Operators

One individual on each shift is responsible for target operations. This individual is the designated target operator. To become a target operator, one must be trained by one of the target experts and to sit one shift with an already certified target operator. The training usually takes place in the Hall A counting house and consists of a guided walk through of the control system.

The target operator must read this document, the Safety Assessment Document for the Hall A Cryogenic Targets, and the short version of the GUI manual. The target operator should be familiar with the GUI system and be able to handle the normal target loop operation, the cryostat operation and the target motion. He/she should also be able to deal with the GUI crash, the IOC crash and the usual alarms.

After the target operator's training, if he/she feels comfortable with the normal operation of the cryotargets, he/she should sign his/her name on the target operator authorization list, indicating that he/she has read this procedure and has been trained. The target expert who trained him/her should inform the Hall A staff who is responsible for the cryotarget system (J. P. Chen).

The table below lists the qualified target operators and provides space for additional entries. The names of all operators must appear in the same list kept in the counting house.

Operator Name	e-mail	Date	Signature	Authorization
J. P. Chen	jpchen	3/21/99	–	–
J. LeRose	lerose	3/21/99	–	–

11.2 Target Experts

The following table contains the names of the currently recognized target experts (who have worked on the Hall A cryotarget system and have extensive knowledge of the system) and their pager numbers

Name (first,last)	Dept.	Call [4]		e-mail	Comment
		Tel	Pager		
Hall A Physicists					
Jian-Ping Chen	JLab	7413	584-	jpchen@jlab.org	page:584-7413
John LeRose	JLab	7624	584-	lerose@jlab.org	page:584-7624
JLab Cryo-Target Group					
Dave Meekins	JLab	5434	449-	meekins@jlab.org	page:584-5434
Mikell Seely	JLab				page:584-5036
Christopher Keith	JLab	5878	327-	ckeith@jlab.org	page:584-5878

Table 11.2: Cryo target: experts and authorized personnel, with their home numbers

A cryotarget expert will be on call all the time when a cryotarget is in cooled state. An on-call cryotarget-expert list will be posted in the Hall A Counting House.

11.3 Safety Assessment

The cryogenic hydrogen and deuterium targets present a number of potential hazards, such as the fire/explosion hazard of the flammable gas as well as the hazards connected with the vacuum vessel and the of handling cryogenic liquids (ODH and high pressure).

In this document the hydrogen target will be referred to, but the deuterium target is essentially identical and almost all comments apply to both targets.

11.3.1 Flammable Gas

Hydrogen and deuterium are colorless, odorless gases and hence not easily detected by human senses. Hydrogen air mixtures are flammable over a large range of relative concentrations from 4 % to 75 % H_2 by volume. Detonation can occur with very low energy input, less than $\frac{1}{10}$ that required by mixtures of air and gasoline. At temperatures above -250 C hydrogen gas is lighter than (STP) air and hence will rise. At atmospheric pressure, the ignition temperature is approximately 1000 ° F but air H_2 mixtures at pressures of 0.2 to 0.5 Atm can be ignited at temperatures as low as 650 ° F. Hydrogen mixtures burn with a colorless flame [23].

The total volume of liquid hydrogen in the heat exchanger is about 2 l. The target cells and their associated plumbing hold an additional 3.4 l. Thus the total volume of hydrogen in the target is approximately 5.4 l. The volume changes between the liquid state and gas at STP by a factor of about 800. Thus filling the target would require about 4,300 STP l of hydrogen. The hydrogen target is connected to a 1,000 Gallon (about 3,800 l) recovery tank. The normal running condition for hydrogen is 25 PSIA. So the total amount needed to fill the target and the tank is about 10,900 STP l. For

deuterium, the target is about 4,300 STP l. The normal running condition for deuterium is 22 PSIA. So the total volume needed to fill the tank is about 5,600 l. The total to fill both the target and the tank is about 9,900 STP l.

The Hall A inventory of hydrogen and deuterium gas is stored outside the Hall A gas shed, adjacent to the counting house. The current inventory is two A size cylinders of hydrogen ($\approx$ 6,800 STP l each) and four A size cylinders of deuterium ($\approx$ 5,000 STP l each). One bottle of hydrogen and one deuterium bottle will be kept in the Hall in order to fill the targets. These bottles will be placed in a gas rack behind the gas panels.

The basic idea behind safe handling of any flammable or explosive gas is to eliminate oxygen (required for burning) and to prevent exposure to any energy source that could cause ignition. In the Hall A environment, the most likely source of oxygen is of course the atmosphere and the most likely ignition sources are from electrical equipment.

11.3.1.1 Electrical Installation

Hall A contains a lot of electrical equipment and almost all of it could serve as an ignition source in the presence of an explosive oxygen and hydrogen mixture. We have made an effort to minimize the dangers from the equipment that is most likely to come into contact with hydrogen gas.

There are a number of electrically powered devices associated with the target gas handling system. All the pressure transducers in the system are approved for use in a hydrogen atmosphere. The solenoid valves on the gas panels are explosion-proof. The AC power for the solenoids is carried by wires which are contained in either hard or flexible conduit. There are also LEDs on the gas panels that provide an indication as to the status of the valve solenoids. These are powered by a 24 V DC supply. The readouts for the pressure transducers are mounted on the gas panels and the AC power for these readout units is in conduit. All the pressure transducers have 4-20 mA outputs.

In addition to the electrical devices in the gas handling system, there are a number of devices inside of or mounted on the scattering chamber.

All the devices which are in the scattering chamber must have their power delivered to them by wires in vacuum. The insulation of these wires should be radiation resistant, so Kapton has been used where available.

The following electrical items are in close proximity to or are actually in the hydrogen system.

Axial Circulation Fan The fans which circulate the hydrogen in the target are AC induction motors and therefore contain no brushes and are practically immune to sparking. The three phase power for these fans is delivered to them by 18 gauge stranded copper wire with Kapton insulation. The maximum current that the fans draw is 5 A for a maximum power consumption of 200 W when pumping liquid hydrogen/deuterium. The current and voltage drawn by the fans is monitored by the control system.

Fan Motor Tachometer The fans have a tachometer which consist of a coil that views the flux change caused by a permanent magnet attached to the motor rotor. The

tachometer signals are carried on 22 gauge stranded wire with Kapton insulation. This is a low power signal. The control system monitors the frequency of the fans.

Low Power Heater This is a "hair dryer" style heater (it resembles the heater elements found in hair dryers and heat guns) that is immersed in the hydrogen. The heater is made of 0.0179 in diameter Nichrome wire with a resistance of 1.993 Ω per foot wrapped on a G10 carrier board. The maximum power available to this heater is 80 W. The power for the low power heater is supplied by a Oxford ITC-502 temperature controller. The heater lead wire is 18 gauge Kapton insulated copper stranded wire. The heaters have a DC resistance of 20 Ω and hence will draw a maximum of 2 A. The power supplied to this heater is monitored by the control system.

High Power Heater There are two kapton enclosed incoloy heater foils wrapped on the inside wall of each heat exchanger. The maximum power available to each heater is 500 W. The heater has a DC resistance of 26 Ω and two heaters in parallel are driven by a 150 V, 7 A power supply. The current and voltage supplied to this heater are monitored by the control system and there is a software power maximum enforced on the power setting of this heater. The heater is connected to the outside world by 18 gauge stranded wire with Kapton insulation.

Resistors There are four Cernox resistors immersed in each target loop. These resistors provide temperature measurements of the target fluid. The temperature controllers that read them use a current of less than 30 μA to excite them (they are excited with a constant voltage which for our resistors is on the order of 30 mV). The Cernox resistors are connected to the outside world with quad strand 36 gauge phosphor bronze wire with Formvar insulation.

Target Lifter There are two AC servo motors which provide the power to lift the target ladder. These motors are powered by three phase 208 V power and are equipped with fail safe brakes (the brakes are **released** by a 24 V DC control voltage) and 50 to 1 gear reducers. On power up, there is a delay relay that insures that the motors are always energized before the brakes are released.

Vacuum Pumps The scattering chamber is evacuated by two Leybold 1000 l/s turbo pumps that are backed by a Leybold 65 cfm mechanical pump. The turbo pumps are powered by 120 V AC power while the backing pump requires three phase 208 V AC power. The motor on the backing pump is explosion proof and approved for use in NEC Class 1, Division 1, Group D (hydrocarbons **but not** hydrogen) environments. An identical mechanical pump is used in the pump and purge system of the gas panels. Both the scattering chamber backing pump and the pump and purge system's mechanical pump exhaust to the vent line.

Vacuum Gauges The chamber vacuum is monitored by an HP cold cathode gauge. This gauge has a maximum operating voltage of 4000 V and a maximum current

of 133 μA. The pressure at the entrance to the roughing pump is measured by a convectron gauge.

11.3.1.2 Flammable Gas Detectors

There are four flammable gas detectors installed (one on top of the target, one each on top of the hydrogen and deuterium gas panels, one on top of the gas tanks) to provide early detection of hydrogen/deuterium leaks. These detectors are sensitive (and calibrated) over the range from 0 to 50 % Lower Explosive Limit (LEL) of hydrogen. The electrochemical sensors were manufactured by Crowcon Detection Instruments LTD and the readout (four channels) was purchased from CEA Instruments, Inc. (The Gas Master Four System). The readout unit provides two alarm levels per channel. The low level alarm is tripped at 20 % of LEL while 40 % of LEL activates the high level alarm. Each channel has a relay output for both low and high level alarm states and there is also a set of common relays for both alarm levels (these common relays respond to the "logical or" of the sensor inputs). The common relays will be connected to the Fast Shut Down System, FSD, which removes the beam from the hall by disabling a grid bias at the injector.

11.3.2 Pressure

The most important aspect of hydrogen safety is to minimize the possibility of explosive mixtures of hydrogen and oxygen occurring. Therefore the gas handling system has been made of stainless steel components (wherever possible) and as many junctions as possible have been welded.

The pressure in the gas handling system is monitored in numerous places. Most importantly, the absolute pressure of the target is viewed by two pressure transducers, one on the fill line, PT127 for H_2 and PT136 for D_2, and one on the return line, PT131 for H_2 and PT140 for D_2. These pressures are also measured by manual gauges. The fill line gauges are PI126 for H_2 and PI135 for D_2. The return line gauges are designated PI130, H_2 and PI139, D_2. The gas tanks are viewed with both pressure transducers (PT133 for hydrogen and PT142 for deuterium) and pressure gauges (PI123 for hydrogen and PI112 for deuterium).

If the pressures are significantly deviate from either from one another or from the normal operating pressure, the target operator should call the target-expert-on-call. When they differ from one another, it often is due to a failure of one (or more) of the pressure transducers. If more than one deviate significantly from the normal operating pressure, it could be due to temperature change or could be, in more serious situation, leak in the system.

11.3.2.1 Target Cells

The target cells themselves represent the most likely failure point in the hydrogen system. The outer walls and downstream window of the cells are made of $\approx$ 0.003 to 0.045 *in*

thick aluminum, which are connected to a flange. There are usually two cells bolted on to each cell block, typically one 15 *cm* long and one 4 *cm* long. Both cells have an outer diameter of approximately 2 inches. The upstream windows of the cells are made from 0.0028 *in* thick aluminum. These windows are connected to 1.25 *in* diameter (0.0065 *in* wall) upstream window tubes with flanges which are also bolted on to the cell block.

The cell block components have been pressure tested hydro-statically to about 100 psia.

11.3.2.2 Pressure Relief

The gas handling and controls systems have been designed to prevent excessive pressure build up in the system in order to protect the target cells from rupture.

In the event that the pressure in the system begins to rise there are multiple vent paths to release it. The first line of defense is the recovery tank. The second line of defense is a small orifice solenoid valve which is slaved to a pressure transducer. This valve, CSV28 for H_2 and CSV57 for D_2, is normally controlled by the limit output of the computer (via a VME based relay) readout of the pressure transducer that views the target relief line, PT131 for H_2 and PT140 for D_2. The valve itself is mounted in the fill line relief assembly. The separation of the valve from its controlling pressure gauge should provide some dampening of the response and the small orifice of the valve also ensures that it will be able to make pressure adjustments gently if need be. There is a separate relief valve on the fill side of the target, CRV30 for H_2 and CRV59 for D_2. This relief is mounted in parallel with the small orifice solenoid valve. Right on top of the cryo-can, on the return side of the target, there is a large size (one *in*) relief valve. The relief valves are set at 40 psig. All target pressure reliefs are connected to the nitrogen vent line. This is a 3.5 *in* diameter copper pipe which is filled with nitrogen gas at atmospheric pressure. Thus any vented target gas is placed in an inert environment until it is released outside of Hall A. Each gas tank has one relief valve and one rupture disk (CRV43 and CRD44 for hydrogen, and CRV72 and CRD143 for deuterium).

In addition to the reliefs on the gas handling system described above, the scattering chamber itself has a four-*in* one PSIG relief, VRV01. This is the path that the hydrogen will take in the event of a cell failure.

The target pressure reliefs are summarized in Table 11.3.

11.3.2.3 Scattering Chamber Vacuum Failure

The scattering chamber will be leak checked before service but obviously the possibility of vacuum loss cannot be eliminated. The most likely sources of vacuum failure are:

Spectrometer Windows Initially the scattering chamber will have two aluminum windows, one for each side of the beam line.

Target Cell Failure This is a multiple loop system. If a target cell fails, the remaining targets will have their insulating vacuum spoiled.

Name	Target	Location	Diameter (*in*)	Pressure (PSIG)
CSV28	H_2	FRA	0.125	40
CRV30	H_2	FRA	0.5	40
CRV82	H_2	RL	1	40
CRV43	H_2	TANK	1	55
CRD44	H_2	TANK	1	55
CSV57	D_2	FRA	0.125	40
CRV59	D_2	FRA	0.5	40
CRV64	D_2	RL	1	40
CRV72	D_2	TANK	1	55
CRD143	D_2	TANK	1	55
CRV35	He	RL	1	40
CRV01		SC	4	2

Table 11.3: A summary of the pressure relieving devices on the hydrogen/deuterium targets and the scattering chamber. FRA is an abbreviation for Fill Line Relief Assembly. and RL is an abbreviation for Relief Line. SC stands for Scattering Chamber.

The two spectrometer windows are both made from aluminum. Each window is six *in* high and subtends 170 ° on the 43 *in* outer diameter of the scattering chamber. This window is made of 0.016 *in* thick 5052 H34 aluminum foil.

The scattering chamber was evacuated (and cycled several times) with both windows covered by the same 0.016 *in* material. The foil forms regularly spaced vertical ridges when placed under load. The window had an inter-ridge spacing of 3 inches. If the window is treated as a collection of smaller rectangular windows which have the full vertical height of 6 inches and the inter-ridge spacing as a width, then stress formulas predict that the 0.016 *in* material would reach ultimate stress at a pressure higher than 35 PSID (for both over-pressure and under-pressure). There is a gate valve between the scattering chamber and the beam entrance (exit) pipe. Both valves will be closed automatically in the event that the chamber vacuum begins to rise and an FSD will be caused (this is done via a relay output of the scattering chamber vacuum gauge). If either valve is closed an FSD will result.

In the unlikely event of a catastrophic vacuum failure, it is important that the relief line of the targets be sized such that it can handle the mass flow caused by the sudden expansion of its cryogenic contents due to exposure to the heat load. A calculation has been performed which models the response of the system to sudden vacuum failure. That calculation indicates that the relief plumbing is sized such that the flow remains subsonic at all times and that the maximum pressure in the cells remains well below their bursting point.

The calculation was performed by following methods in an internal report from the MIT Bates laboratory [24]. The formulas and algorithm in the report were incorporated in two computer codes and those codes were able to reproduce results in the report (hence

they represent an accurate implementation of the Bates calculation).

The calculation can be logically broken into two parts. First, the mass evolution rate is calculated from geometric information and the properties of both the target material and vacuum spoiling gas. The principal results of this first stage are the heat transferred per unit area, q, the boil off time, t_b, and the mass evolution rate, w. Second, the capability of the plumbing to handle the mass flow is checked. The principle result of this second step is the maximum pressure in the target cell during the discharge, P_1.

The formula involved will not be repeated (readers are referred to the Bates report for detail). The information that was used as input to the calculation is given in tables 11.4, 11.5 and 11.6.

For the calculation of the boil off rate the target was split into two pieces: the cells plus cell block, both aluminum; and the heat exchangers plus the connecting plumbing, all steel. The mass evolution rates for the two pieces were then added in order to find the total mass flow rate.

Fluid and Phase	Property	Symbol	Value
Hydrogen/Liquid	Temperature	T(K)	22
	Density	ρ (kg/m^3)	67.67
	Specific Heat	C_p (J/(kg K))	11520
	Enthalpy of Vaporization	H_v J/kg	428,500
Hydrogen/Vapor	Temperature	T(K)	22
	Density	ρ (kg/m^3)	2.4991
	Viscosity	μ (kg/(s m))	$1.29*10^{-6}$
	Specific Heat	C_p (J/(kg K))	13,550
	Thermal Conductivity	k (W/(K m))	0.02
	Volume Expansivity	β K^{-1}	0.00366
Air	Temperature	T(K)	273
	Pressure	P (Torr)	760
	Density	ρ (kg/m^3)	1.224
	Viscosity	μ (kg/(s m))	$1.8*10^{-5}$
	Specific Heat	C_p (J/(kg K))	1005
	Thermal Conductivity	k (W/(K m))	0.0244
	Volume Expansivity	β K^{-1}	0.00367

Table 11.4: The properties of the gases used to calculate the heat transferred to the target during a catastrophic vacuum failure.

The calculation of the pressure drop includes all the plumbing up to the large relief valve. The calculation assumes that all the mass flow is carried out the relief side of the target gas handling system (no flow out of the fill line reliefs). The friction factor for each diameter was taken from a Moody plot. A typical value was $f = 0.017$. The effective K values, K_{eff}, were adjusted to the average tube inner diameter which was taken to be

Quantity	Cell Block	Piping	Heat Exchanger	Total
D	2.5 in (0.063 m)	1.5 in (0.038 m)	7 in (0.1778 m)	
k	55 W/(K m)	6.5 W/(K m)	6.5 W/(K m)	
A	0.146 m^2	0.185 (m^2)	0.216 m^2	0.510 m^2
V	0.001 m^3	0.0019 (m^3)	0.002 m^3	0.0054 m^3
x	0.004 in (0.0001 m)	0.065 in (0.00165 m)	0.12 in (0.003 m)	
q	14903 W/m^2	10526 W/m^2	11235 W/m^2	
t_b	26.78 s	28.29 s	23.89 s	26.3 s
w	0.0038 kg/s	0.0045 kg/s	0.0056 kg/s	0.014 kg/s (0.03 lbs/s)

Table 11.5: The geometric quantities needed for and the results of calculations of the mass evolution rate after a catastrophic vacuum failure.

0.71 in. The final K_{eff} value was 40. The minor losses are from bends, expansions and contractions in piping.

The final result shows the cells subjected to 58 PSIA during the boil off, which is comparable to the 85 PSIA pressure that the assembled cell blocks were tested at, and is significantly below the tested pressure of the cell components.

The scattering chamber has a volume of about 2,100 l with perhaps an additional 200 l of volume in the bellows and the cryo can. If one target cell were to rupture and the chamber were unrelieved, the chamber pressure would rise to about 2 Atm. It takes approximately 150 seconds to bring 5 l of 22 $^\circ$ K hydrogen to room temperature by conductive heat transfer with the scattering chamber walls. In order that the maximum pressure in the chamber stay near one atmosphere, it is necessary to vent one half of the target mass in approximately one half of the total expansion time. Therefore the relief valve for the scattering chamber should be capable of venting about three grams per second at a low pressure difference (say two PSIG). If one considers the case where all three targets fail at once, the vent must be capable of handling three times that amount. A four *in* diameter relief valve placed near the top of the scattering chamber should be capable of handling this rate. The 4 *in* relief valve will vent into the hall. A rise in the chamber vacuum will stop the beam, FSD, and cause the gate valves on either side of the scattering chamber to close.

In the unlikely event that a line which carries helium coolant were to rupture the four *in* chamber relief valve is capable of handling the full coolant flow rate.

11.3.3 Temperature Regulation

This is really more an issue of target stability than one of safety. However, a target with a carefully regulated temperature will presumably not undergo worrisome pressure changes.

Inner Diameter	Length	K (K_{eff})
0.44 in tube	10 ft	4.64 (31.5)
0.88 in tube	10 ft	2.32 (0.98)
Quantity		Value
Minor Losses		7.4
K_{eff}^{total}		40
Average Diameter		0.71 in
xmax		0.890
w_{sonic}		0.065 lbs/s
m		0.323
x		0.748
P_2		14.7 PSIA
P_1		58.3 PSIA
P_1		43.6 PSIG

Table 11.6: Tubing sizes, and other information needed to analyze relief line response. The mass flow rate was 0.03 lbs/s.

Each target contains six quality temperature measurements, four Cernox resistors and two hydrogen vapor pressure thermometers. The temperature regulation is done with a software control of a high power heater to the temperature read by one of the Cernox resistors. This is a three parameter control loop (Proportional, Integral and Differential Control or PID).

Finally, the heat load from the beam will be compensated in the "active" target loop by use of the high power heater. This is not a true regulation but rather a one for one replacement of the beam load should the beam disappear for whatever reason. The beam load is calculated from the target length, the beam current as read from a current monitor and the target material.

Excursions of the target temperature outside acceptable limits will cause the control system to take action. Finally the redundancy of temperature measurements can be used by the control system to pick up the failure of a sensor or its readout channel. A more complete discussion of target temperature regulation is available in Reference [25].

11.3.3.1 Target Freezing

Solid hydrogen is more dense than the liquid phase, so freezing does not endanger the mechanical integrity of a closed system. The chief hazard is that relief routes out of the system will become clogged with hydrogen ice, making the behavior of the system during a warm-up unpredictable. When the hydrogen and deuterium targets are in use, we usually use only 15 K coolant. While the hydrogen freezing point is about 13.8 K, the hydrogen target should not get frozen. The freezing point of deuterium is $\sim$ 19 K, higher than the temperature of the gas used for cooling (15 K).There is a chance that

the deuterium target can freeze. Also sometime we use 4 K instead of 15 K coolant. In this case, hydrogen target could also get frozen.

The coolant flow through the three target heat exchangers is connected in parallel for the three target loops. The entire target system will be run so that it represents a constant heat load on the ESR. For instance, the ESR will deliver a constant mass flow of helium cryogen at a constant temperature, about 15 K, and the coolant will be returned at an approximately constant but higher temperature, usually about 20 K.

The targets are always temperature regulated by temperature controllers. Also a high power heater will be in the PID loop to compensate any large temperature fluctuations to keep the temperature constant. In the unlikely event that the target temperature drops too low, an alarm will sound and the target operator will turn down the corresponding J-T valve(s). In one instance the target temperature could drop is when the target control ios is rebooted. After the ioc reboot, the high power heater will be reset to zero before going back to PID control. Although the time the high power heater is zeor is short (for about 1 minute), the temperature will drop. To prevent it to happen, an auxiliary heater is used in parallel to the regular heater. During an ioc reboot, the auxiliary heater will replace the rugular one to keep the temperature from dropping.

11.3.4 ODH

The total volume of the targets is relatively small, with the entire scattering chamber containing only 9,000 STP l of target gas when all three targets are full. As the scattering chamber is located in the middle of Hall A (i.e. not in a confined area) and the total Hall A volume is 40,000 m^3, the ODH hazard is minimal.

11.3.5 Controls

The target controls have been implemented with the EPICS [14] control system and with hardware very similar to that employed by the accelerator. The basic control functions reside on a VME based single board computer. The graphical interfaces to the control system use a PC, and also require the Hall A Hewlett Packard, HP, computer for control (HAC) to be present as well.

All of the instrumentation for the target is downstairs in Hall A. Most of the equipment (in fact all of the 120 V AC equipment) is on an Uninterruptable Power Supply, UPS. The items whose power is not on UPS are:

- The scattering chamber vacuum pumps and the gas panel backing pump
- The target lifting mechanism
- The target circulation fans.

This is a 7 kVA zero switching time UPS which is dedicated to the target. The PC, HAC and the counting house target X-terminal are on Uninterruptable Power as well. The targets dedicated UPS provides 18 minutes of power at full load (or 50 min at one half

load). This will provide sufficient time for the target operator to properly turn down the targets during power outage, i.e., take away heat load and turn down the fan speed. The target operator should call the target-on-call when there is a power outage.

The principal functions that the control system performs are:

Pressure Monitoring The pressure at various places in the system is monitored and alarm states are generated if a transducer returns a value that is outside user defined limits. High pressures will cause the solenoid relief valve to open.

Target Lifter The target lifting mechanism is controlled by the computer. This allows one to place the desired target in the beam.

11.3.6 Authorized Personnel

The principle contacts for the cryogenic targets are listed in table 11.7. Every shift must have a trained target operator whenever the cryogenic targets contain liquid. These operators are trained by one of the "experts" listed in the table and certified by J.P. Chen.

Name (first,last)	Dept.	Call [4]		e-mail	Comment
		Tel	Pager		
Hall A Technicians					
Tech-on-Call	Hall-A	W.B.			Vacuum
Ed Folts	JLab	7857		folts@jlab.org	Vacuum
Hall A Physicists					
Cryotarg-on-Call	Hall-A	W.B.			Cryotarget
Jian-Ping Chen	JLab	7413	584-	jpchen@jlab.org	Cryotarget
JLab Cryo-Target Group					
Dave Meekins	JLab	5434	449-	meekins@jlab.org	
Mikell Seely	JLab				
Christopher Keith	JLab	5878	327-	ckeith@jlab.org	
Central Helium Liquefier (CHL) Experts					
Cryo-on-Call	JLabMCC	7048			ESR
CHL-group	JLab	7405			ESR

Table 11.7: Cryo target: authorized personnel and contacts. "W.B" stands for the white board in Counting House.

11.4 Cryogenic Target Control System User Manual

A short version of the cryotarget target control system user manual, written by Kathy McCormick, is available at `http://hallaweb.jlab.org/equipment/targets/cryotargets/Halla_tgt.html`. An updated User's Guide to the Hall A Cryotarget, written by Chris Keith, is available at `https://polweb/guides/atarg/ATARG_MAN.html`. Other useful information for cryotarget operators is also available at the above web sites.

Chapter 12

Polarized ^{3}He Target [1] [2]

12.1 General Description

12.1.1 Physics Principle

This target system provides a high-density ($\approx 2.5 \times 10^{20}$ nuclei/cm^3) polarized ^{3}He gas target for spin physics experiments.

The target employs the so-called spin-exchange technique. In the traditional spin–exchange technique ^{3}He is polarized in a two-step process. First, rubidium vapor is polarized by optical pumping with circularly polarized 795 nm laser light. Second, the polarization of the Rb atoms is transferred to the ^{3}He nucleus in spin-exchange collisions, in which ^{3}He nuclei are polarized via the hyperfine interaction. Recently,a novel technique of hybrid pumping has been used. In addition to the direct spin exchange, it also happens indirectly for the hybrid Rb-K cells: spin-excahnge first happens between rubidium and potassium atoms (very fast) and then between potassium atoms and ^{3}He nuclei, which is more efficient than the direct Rb-^{3}He spin exchange. The target cell contains high pressure ^{3}He gas and a small amount of vapor of Rb-K mixture. In addition, it also contains a small amount of nitrogen to increase the pumping efficiency.

12.1.2 Apparatus

High power infrared (795 nm) diode lasers (about 100 W) provide an intense monochromatic light beam for optical pumping. The lasers are housed in a laser room outside the hall next to the counting house. Laser light goes to the hall through an optical fiber system. An overview of a typical arrangement of the target components in the Hall is shown in Fig. 12.1.

[1] *CVS revision* Id: pol-he3.tex,v 1.37 2008/10/14 16:20:34 jpchen Exp

[2] Authors: Revised by: T. Averett, J. P. Chen, C. Dutta, J. Katich, Y. Qiang. earlier versions: T. Black, J. P. Chen, P. Chevtsov, H. Gao, O. Hansen, S. Incerti, S. Jensen, M. G. Jones, K. Kramer, M. Liang, N. Liyanange, K. McCormick, Z.-E. Meziani, X. Zheng. jpchen@jlab.org

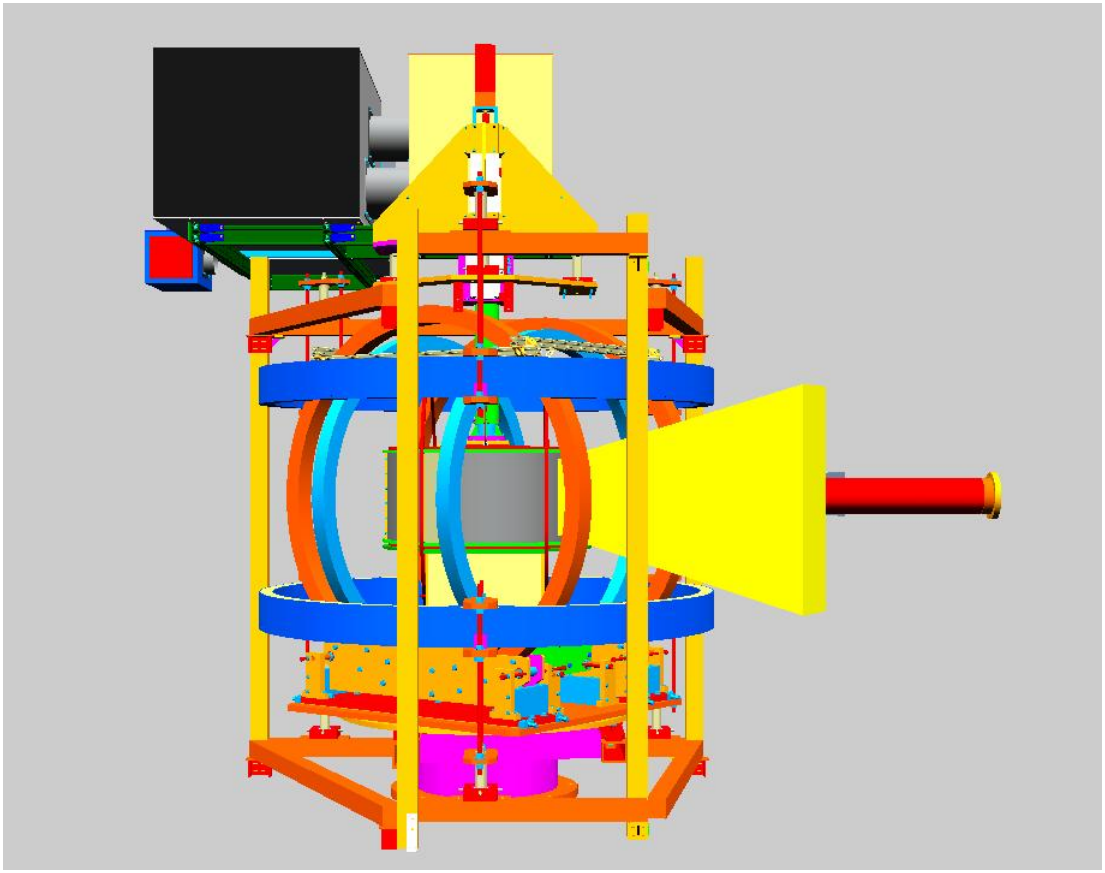

Figure 12.1: Overview of the target setup. Shown are the laser beam pipes covering the laser beam line on top of the target area, and the three sets of Helmholtz coils with the support sub-assembly.

The polarized target comprises several components beyond its target cell (see Fig. 12.1) related to its operation, they are in subsection:

1. Three sets of orthogonal Helmholtz coils provide the target spins with a holding magnetic field of few tens of Gauss as well as define the orientation of the polarization in any required direction. The set of vertical coils is a new addition and will be used for the first time for the transversity experiment [26].

2. Two pairs of RF coils which allow for the measurement of the target polarization using the Adiabatic Fast Passage (AFP) technique and the Electron Paramagnetic Resonance (EPR) technique, as well as a way to flip target spin direction.

3. A multi-purpose enclosure which is part of the laser light enclosure and provides a containment of the target cell in case of explosion. It also provides a containment volume for the ^{4}He gas to cool the target windows with cooling jets, minimizing the radiation length crossed by the electron beam.

4. An oven with all its related components for providing the necessary temperature to the pumping cell in order to bring Rb and K in their vapor phase and control their number densities.

5. A target ladder subassembly which supports a target cell, a reference cell, (which can be filled with Hydrogen, ^{3}He or Nitrogen gas with pressure up to 10 atmospheres for calibration or to study dilution, density or background), a multi-foil ^{12}C optics target, a BeO beam viewer and an oven. It also includes a full mechanism for positioning the targets and bears the target cell viewing mirrors and the optical beam line mirrors.

6. A laser and optical fiber system in the laser room bring up to fifteen laser beams, each from a 30-Watt diode laser, to the hall. These laser beam lines are used for optical pumping of the rubidium-potassium alkali atoms in three different directions: along the electron beam (longitudinal), perpendicular to the electron beam line but on the horizontal plane (transverse) and the vertical. They can also be re-directed to any direction as needed.

12.1.3 Control System

The control (including monitoring and measurement) system for the target Helmholtz coil magnet power supplies, the NMR polarimetry and the EPR polarimetry is based on the LabView system on a PC. The control system for the target vertical motion, the lasers, the oven heater, and temperature and pressure monitoring runs under the EPICS [14] environment utilizing an IOC in a VME crate. The LabView system records data on disk and communicates with the EPICS system through the network. Information from the EPICS IOC is logged on disk and selected information passed to the event data stream.

12.2 Operation Overview

In normal operation the target will be under one of the following situations described below.

1. The target is in "beam position", the fast raster set to a nominal 4 mm $\times$ 4 mm area coverage and the experiment is running to collect physics data. In this configuration the monitoring of the target consists of reading a set of temperatures of the pumping cell, target cell and reference cell. The temperature in the pumping cell provides feedback for the temperature controller. A spectral-analyzer is monitoring the laser wavelength and the relative intensity. All interlocks of electron beam and laser beam should be on.

2. The beam is turned off and the target is moved to "Pickup Coil Position" (polarized ^{3}He target in a position between the NMR pickup coils) and a polarization measurement is performed using the NMR (AFP) method. The laser beam will be stopped first. If the polarization is in the transverse mode, a rotation of the polarization to the longitudinal direction is performed (procedure described in Section 12.9). Once the measurement is completed the target cell will be moved back to the "beam position". If the next running is in transverse mode, a rotation of the polarization to the transverse direction is performed. The laser beam will be turned on. The beam interlock is reset and the fast raster enabled before turning the beam back on target. The physics data taking should resume.

3. The "Polarized ^{3}He Target" is either in "beam position" or in "pick-up coil position". The data taking is stopped and the beam is turned off. An EPR measurement is performed (procedure described in Section 12.10). After the measurement is completed and the fast raster enabled, the beam is put back on and data taking resumes.

4. The "BeO Target" is moved to "beam position". The electron beam current lowered (to $<$ 5 μA with raster-off) as not to damage the BeO target. The monitoring of the beam position is performed by looking at the TV monitor which displays the view of the target.

5. The multi-foil ^{12}C "Optics Target" is in "beam position". Data on the optics target are taken for spectrometer optics study or detector calibration. Since the BeO and the optics target are in beam at the same time, the above two measurements are often performed at the same time.

6. The "hole" target is in "beam position". The "hole" target is a single ^{12}C foil with a 2mm x 2mm square hole at the center. It is used for center the beam with respect to the target ladder.

7. The target ladder "Empty Target" frame is moved to "beam position" whenever beam tuning is performed, and when checking for possible beam halo background.

8. The "Reference Cell Target" is in "beam position" with the beam fast raster on and data on the reference cell are taken for calibration.

12.3 Laser System

The laser system provides 795 nm circularly polarized light for optical pumping of the target. The light is generated by several solid-state diode lasers, which are located in a laser room outside the hall. Each laser emits roughly 30W of power and is transported into the hall with an 75 meter long optical fiber. Up to five laser beams are combined to one through a 5-to-1 combiner. It is then polarized by passing through a polarizer (beam splitter) followed by standard $\lambda/4$ waveplates. Because of the invisibility and high intensity of the laser beam, the lasers present a significant safety hazard. The system generates three independent laser beams for optical pumping of three different target spin directions: parallel, perpendicular, or vertical to the electron beam. In the standard configuration, up to five lasers are used for each direction. Further, the laser polarization direction can be reversed by rotating the $\lambda/4$ waveplates by 90 degrees.

12.3.1 Laser Room & Beam Path

To protect the lasers from radiation damage due to the electron beam and shield personnel from accidental exposure to hazardous laser light, all laser systems are located in a laser room outside the hall.

Up to 15 infrared diode lasers (five for each pumping direction) and the related interlock control box are located on two 19" racks in the laser room. Light is guided out of each laser and goes into the hall via an optical fiber. Five beams combined to one with a 5-to-1 combiner. The combined beam is focused by two 2" diameter convex lens then divided by a polarizing beam splitter cube into two linearly polarized rays. Because the laser light is initially unpolarized, both the direct and the split beam carry approximately half the power. To utilize the full laser power it is necessary to combine both beams and focus them onto the optical pumping cell. This is accomplished as follows:

The direct beam is reflected by a 3" diameter dielectric mirror which can be adjusted to steer it towards the pumping cell. The split beam passes through a $\lambda/4$ waveplate, is reflected by a 2" diameter dielectric mirror, and passes through the $\lambda/4$ waveplate again. The fast and slow axes of this $\lambda/4$ waveplate should be oriented at an angle of 45° to the horizontal or vertical direction. The linear polarization of this beam is thus rotated by 90°, and is able to pass through the beamsplitter, essentially without reflection. The second passing through the splitter is necessary to achieve a very high degree of linear polarization for the split beam since the splitter only gives high polarization for direct beam ($T_P > 95\%$,$R_S > 99.8\%$).

Now both beams from each laser have identical linear polarizations. Each passes through a $\lambda/4$ waveplate that transforms its polarization from linear to circular. The

orientation of each $\lambda/4$ waveplate is shown in Fig. 12.2, note that all $\lambda/4$ waveplates should have the same orientation.

The resulting beams are reflected twice by a pair of adjustable 6" diameter mirrors mounted on top or next to the target pumping chamber. These mirrors can be standard dielectric ones since they will be in a polarization-preserving compensating configuration (one mirror rotated by 90° with respect to the other). The laser beams are carefully aligned to coincide on the pumping chamber of the cell. They enter the target chamber via transparent windows on the oven wall.

Under normal conditions, laser light will be mostly absorbed by the rubidium in pumping cell. There are additional windows on the oven to allow lights to be collected for the EPR measurement and for spectral-analyzer to monitor laser spectrum and intensity. For the ERP measurement, light is focused by two lenses (mounted on the oven) into an optical fiber to be transported to the EPR photodiode which is located behind a shielding wall. At the meantime some light will be viewed by the spectral-analyzer through an optical fiber.

The laser beam line is protected by beam pipes that extend from the laser room to the target area. A laser enclosure with interlock covers the laser optics system and the target. It is important to point out that the complete laser beam lines and optics system are fully enclosed with laser intrelock system from the rest of the hall.

The entire laser room is a laser controlled area that requires special safety precautions (see Section 13 and Appendix A).

12.3.2 Diode Lasers & Controls

The laser light for experiments is provided by multi (up to 15) 30 Watt, 795 nm solid-state diode lasers. The primary lasers used during the experiment are made by Coherent Semiconductor Inc. The diode lasers consist of a main enclosure which contains the diode, power supplies, fans and control systems for the laser. The laser light from the diode is sent into a flexible optical fiber which extends out of the main enclosure and goes into Hall A. The fiber is 75m long in a stainless steel jacket.

The lasers operate at diode temperature from 15° C to 26.5° C depending on the system. They are run at output power of 30 Watts which uses an operating current of 35-40 Amps. The output laser light has a central wavelength of 795 nm with a spectral width of less than 2 nm. The fiber diamter is 800 microns. The beam divergence is < 0.20 N.A.

The lasers have a local control system, which is integrated into the main enclosure. The local control allows adjustments in operating current (and therefore the laser power) and diode temperature (and therefore the wavelength within a small range).

During the experiment the lasers will be controlled remotely through EPICS. The lasers have a serial IO port on the back of the main enclosure which is connected to a VME RS-232 port. There is an MEDM [18] GUI interface for each of the lasers, which allows remote control and monitoring of current and temperature as well as being able to turn each laser on and off.

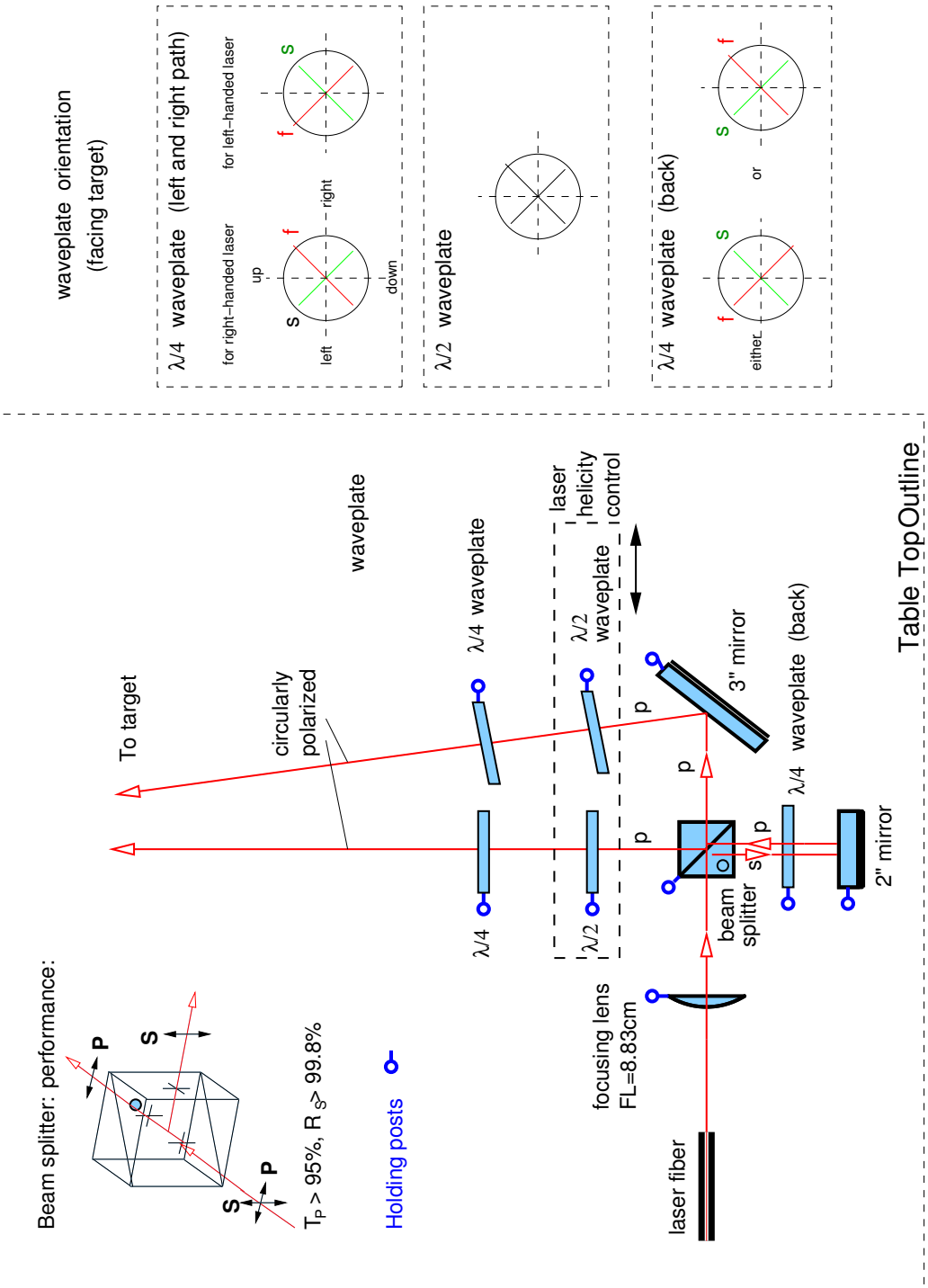

Figure 12.2: Top view of the optics setup.

12.3.3 Alignment

Basic procedure for laser alignment

1. Set the height of the diode laser, the center of the polarizing cube (beam splitter), the two-inch mirror, the quarter wave plates, the lens, and the three-inch mirror to be at the same height.
2. Viewing along the direction of the cube, the mirror and the wave plates, you should be able to see the target. Here target refers to the 6" mirror on top of the oven.
3. Place diode alignment laser such that it passes through the center of the polarizing cube and the center of the target.
4. Rotate the cube and change the angle such that the back reflection hits the alignment laser and such that the reflection hits the diode laser simultaneously.
5. Place the two focusing lens in its mount with the flat side away from the diode laser. Adjust them so that the back reflection goes back on itself.
6. Turn the diode laser on at LOW POWER.
7. Adjust the head of the diode laser such that the light goes through the center of the lens.
8. Rotate the cube mount such that the light passes through the center. Be sure that the cube is mounted so that the light enters the marked side and is reflected towards the two-inch mirror.
9. Turn off the diode laser.
10. Place the two-inch mirror into its mount and move such that the alignment laser hits the center.
11. Place a quarter wave plate between the cube and the two-inch mirror.
12. Turn the laser on at LOW POWER.
13. Adjust the position of quarter wave plate so that the laser passes through the center.
14. Adjust the two-inch mirror so that the reflected light hits the target.
15. If you know the axes of quarter wave plate, rotate it according to Fig. 12.2. If not,
    - Rotate the quarter wave plate so that the light which passes through the cube from the two-inch mirror is a minimum.
    - Rotate the quarter wave plate forty-five degrees.
16. Adjust the two-inch mirror so that the light hits the target.
17. Check to see where the back reflection of the diode is hitting. It should be near the head of the diode laser but not directly on top of it. If it is then rotate the cube slightly and realign the two-inch mirror. Repeat if necessary. It is important to keep the back reflection away from the fiber since a small amount of back reflected laser could reach the diode through fiber and will damage the laser.

18. Place the three-inch mirror in its mount.
19. Check to see that the diode light is hitting the mirror.
20. Adjust the three-inch mirror so that the light is hitting the target.
21. Center a quarter wave plate in the path of each beam.
22. If you know the axes of quarter wave plate, rotate it according to Fig. 12.2. If not, you need to do bench test first to find the axes of each quarter wave plate.
23. Repeat for all beams heading towards the target.
24. Be sure that the helicity of each beam line is the same.

With 5-to-1 combiner The basic procedure is the same for alignment. But couple of special steps need to be considered.

- Since the 5-to-1 combiner gives out 5 spots, we have to merge those spots finally at the position of the cell. In practice, first we need to overlap all the spots as much as efficiently on the oven window so that most of the or "all" of the light go through it to hit the cell.
- We run UNRAT.vi to simulate the situation in this case because we use two lenses now unlike the usual condition. The first lens has the focal length 8.3 cm as usual and the second lens has a focal length of 75cm. The simulation approximately gives you the relative distance of the first lens from the fiber tip and also the distance of the second lens from the fiber tip.
- With these numbers in hand, we have to place the lens and play around a little bit to see whether all the 5 spots coming through the first lens actually incident within the second lens. This needs some "playing" because in real world, we have to make sure that all the spots after coming out from the second lens "really" pass through the all the optics component.
- Now the alignment procedure is basically the same once we have the spots within all the optics components. In practice, once we fix the distance between the fiber and the first lens and make sure the spot size looks fine on that first lens, we dont usually touch those anymore. All we adjust is the second lens and other components as mentioned in the usual steps for alignent.
- When all the five spots incident on the second lens, they might hit the edge of the lens retainer in the frame. Sometimes it is difficult to avoid. In that case, we have to make sure that all the 5 spots are symmetric w.r.t the center of the lens and the small portion hitting the edge is only from the halo of all the spots. One can make all the spots really small to go through the lens, but in order to adjust the outcoming spot to go through the beam splitter completely , one has to make the spots at the second lens larger and that the halo may hit the edge.

- Once we adjust these two lenses, the rest is the same as mentioned earlier for the alignemnt.

Testing quarter wave plates

- Find the direction of the axes:

  1. Use the laser beam which passes through the polarizing cube (beam splitter).
  2. Place the unknown wave plate in the beam.
  3. Place a polarizing cube after the unknown wave plate.
  4. Place a power meter perpendicular to the polarizing cube such that it measures the power of reflected light.
  5. Rotate the unknown wave plate such that the reflected light coming from the second cube is at a minimum.
  6. Now one of the axes is in horizontal direction and the other is in vertical direction.

- Make sure the axes of all quarter wave plates are identical (either fast or slow):

  1. Use the laser beam which passes through the polarizing cube (beam splitter).
  2. Measure the laser beam power P.
  3. Place the 1st quarter wave plate in the beam, rotate it such that one of the axes (marked axis) is in vertical direction.
  4. Rotate the 1st quarter wave plate by 45° clockwise.
  5. Place a 2nd quarter wave plate after the 1st one, rotate it such that one of the axes (marked axis) is in vertical direction.
  6. Rotate the 2nd quarter wave plate by 45° clockwise.
  7. Place a polarizing cube after the 2nd quarter wave plate.
  8. If the reflected light coming from the cube is at a minimum, then the marked axes of these two quarter wave plates are opposite (one is fast and the other is slow);
  9. If the reflected light coming from the cube is at a maximum and equals roughtly the full power P, then the marked axes of these two quarter wave plates are identical (both are fast or both are slow);
  10. If the reflected light coming from the cube is at a maximum and equals roughtly the half power P/2, one of the two wave plates is a half wave plate.

Some technical details

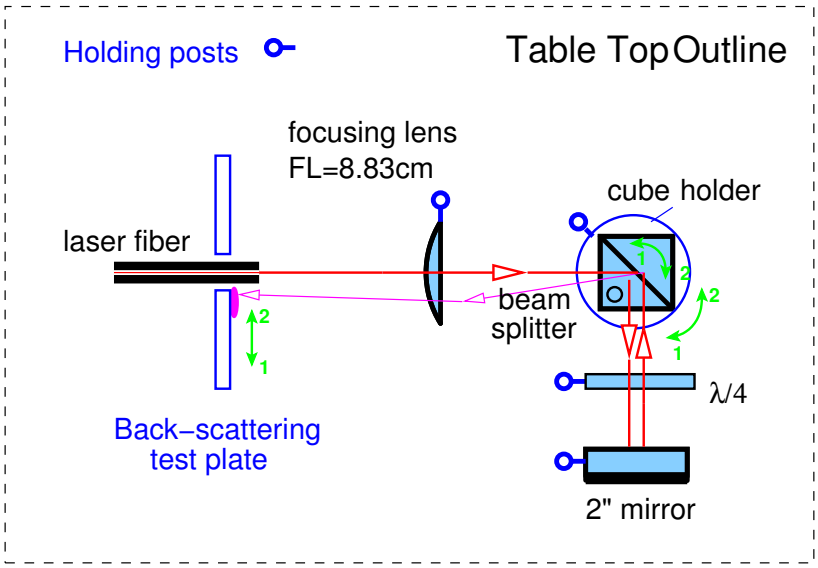

Figure 12.3: Adjusting back-scattering light

- One needs to be careful about backscattering light since it may damage the laser FAP (diode) if it is right on top of the fiber. However, if the backscattering light is far away from the fiber, it indicates that the system is not optimized and will affect the quality (intensity and polarization) of laser light to the target. The major part of backscattering light comes from the P light reflected from the 2" mirror and the beam-splitter. To check position of backscattering light, one should use a backscattering test plate. Never use paper or any flammable material around fiber. Always turn off the laser when putting on or taking off the test plate.

- Adjust position of back-scattering spot vertically: Probably the reflecting surfact of beam-splitter is not exactly perpendicular to the laser beam. Make sure the fiber, focuing lens and cube(beam-splitter) are at the same level, then rotate cube, at the same time adjust the 2" mirror if necessary.

- Adjust position of back-scattering spot horizontally:

  1. Moving spot to the left (viewing towards fiber): Rotate cube holder clockwisely (viewing from the top), then rotate cube (relative to its holder) anticlockwisely. Keep the spot at the center of 2" mirror. See Fig. 12.3
  2. Moving spot to the right (viewing towards fiber): Rotate cube holder anticlockwisely, then rotate cube anticlockwisely. Keep the spot at the center of 2" mirror.

12.3.4 Operation I: Local Mode

To turn a laser on:

1. Be sure to connect the laser control box to the interlock and to the correct laser.
2. Turn on the switch on the back panel of the laser.
3. Turn the key on the front panel to turn on the power.
4. Set the current through the keypad.
5. Press the On/Off button. The screen should show 'laser enabled'.
6. Press the On/Off button again. The screen should show 'laser on'. The laser should be on now.

To turn a laser off:

- Press the On/Off button. The screen should show 'laser disabled'.

Table 12.1 lists the optimum parameter determined for the 30 W lasers used in early experiments.

Laser	PS #	FAP-I #	Set Current	Set Temperature	Maximum Current ⋆
Coherent 1	3115	V7645	38500 mA	15 °C	45000 mA
Coherent 2	4151	V7250	37000 mA	24 °C	44600 mA
Coherent 3	4157	V7251	40000 mA	26.3 °C	48000 mA
Coherent 4	4206	V8491	40000 mA	15.5 °C	48000 mA
Coherent 5	4209	V8511	36000 mA	19.7 °C	43200 mA
Coherent 6	4208	V8492	40000 mA	14.7 °C	48000 mA
Coherent 7					
Coherent 8					
Coherent 9					
Coherent 10					

⋆ Factory set absolute maximum current

Table 12.1: Operational parameters for the 30 W lasers.

12.3.5 Operation II: Remote Mode

For the remote mode to work, the lasers must be connected to the interlock box, the interlock system must be engaged and the laser key turned on as described above. The lasers can then be controlled through the MEDM GUIs:

To turn a laser on:

1. Set the desired temperature and current in the "Set Temp" and "Set Current" enter boxes.

2. Press the "Enable" button. If you have a camera pointing at the laser box in the Hall then you should see 'laser enabled'.
3. Press the "Start" button. If you have a camera pointing at the laser box in the Hall then you should see 'laser on'. The laser should now be on.

To turn a laser off:

- Press the "Stop" button. If you have a camera pointing at the laser box in the Hall then you should see 'laser disabled'.

In addition to cameras pointing at the lasers boxes in the Laser Hut to monitor lasers on or off, there is a spectral-analyzer which monitors both the relative power and the waveform of the lasers. The spectral-analyzer has remote readback. Alarm will be set when the readback deviate from the regular running condition by more than 10%. This will enable us to know when there is one laser goes off or when the cell ruptured.

12.4 Target Cell

12.4.1 Description

The target cell is usually a 40 cm long aluminosilicate glass (GE180) high pressure (about 10 atm) double chamber cell. Typical dimensions for a 40 cm cell are shown in Fig. 12.4. It is a closed system filled with a gas mixture which consists of ^{3}He, rubidium and nitrogen.

The cell volume is about 200 ml for a 40 cm cell. The interior pressure of the cell at room temperature is between 7 and 10 times atmospheric pressure. The cells contain approximately 70 torr of nitrogen to help with the spin-exchange process. There is usually 0.1-0.3 g of Rb-K mixture with a mixing ratio of 1:5 in the pumping chamber. The tritium contamination of the ^{3}He gas used to fill the cell is less than 10^{-11}% according to the specifications from the manufacturer, Spectra Gases.

The glass walls of the cell vary in thickness from cell to cell and from chamber to chamber. The end windows of the target chamber are 120-150 microns thick and are therefore the thinnest part of the cell. The walls of the target chamber and transfer tube are over a millimeter thick and the pumping chamber walls are up to 2 mm thick.

The cell is installed on a target ladder and then this ladder is mounted to the bottom of the oven. The cell is attached to the target ladder with a high-temperature elastomer, GE RTV106. The ladder is then bolted onto the oven.

12.4.2 Installation & Replacement

The target installation is a delicate procedure and should be performed only by qualified personnel. A minimum requirement is Radiation Worker II training. Only the first time installation does not require the monitoring of radiation around the pivot area. After

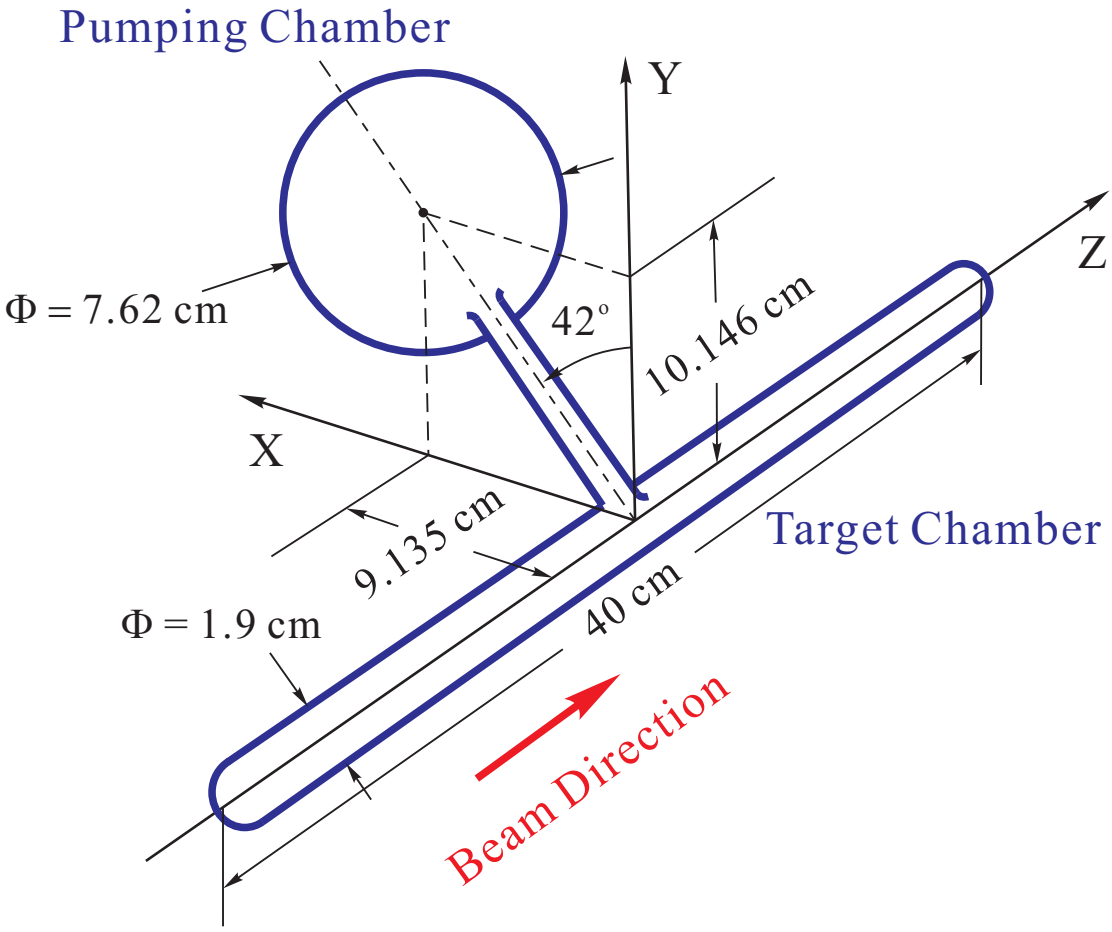

Figure 12.4: Typical 40 cm polarized ^{3}He target cell used in this experiment.

the cell has been exposed to the electron beam, any replacement of the cell must be done under strict observation of possible radiation and contamination hazards.

The cells are fragile and under high pressure so they can cause damage not only to exposed skin and eyes, but also hearing. It is therefore important to wear hearing protection in the vicinity of an exposed cell and also to wear a face shield and a safety glasses when handling or in the vicinity of someone handling a cell.

In the following we describe the procedure for cell replacement. The procedure applies both to a routine replacement and a replacement after a cell explosion.

- If the replacement of the cell follows the explosion of a previous target, a new Q curve of the pickup coils should be measured. If the pickup coils have deteriorated, they should be replaced as well.

- Lasers should all be turned off. Laser fibers be disconnected from the lasers and be

lock-away following the lock-and-tag procedure.

- Prepare the replacement target and, if necessary, a new set of pickup coils. Request Hall access from MCC, and wait for a member from the RADCON team to accompany the group of qualified people authorized to change a target cell.
- The member of the RADCON group will evaluate the radiation level around the target area. If safe levels of radiations are observed, the work can proceed. Otherwise a Radiation Work Permit will have to be written. The member of the RADCON group will either clean up the glass pieces or, after determining that there is no contamination, informs us that we can proceed to clean up the glass pieces.
- All personnel within the target area platform must wear ear protection, a face shield and a pair of safety glasses during any access to the inside of the target enclosure.
- Remove the side enclosure to provide sufficient access to the target. Monitor the radiation level close to the target ladder and oven. Determine what conditions are required to comply with a radiation safe work condition.
- Qualified personnel should proceed to replace the target and align it according to well defined reference lines of the target ladder. The motion of the target and the clearance between the pickup coils should be tested. When finished, the enclosure should be put back in place.
- If an intact target cell was removed, it should be stored in a wooden box with a screwed lid or a metal box specially designed for store target cell. It must be left in the hall with "Pressurized Glass Cell, Open By Authorized Personnel Only" warning sign on the box. It can only be removed from the Hall after approval from RADCON.

12.5 Target Ladder & Motion System

12.5.1 Description

The polarized ^{3}He target system has five target positions: the actual polarized target cell, which can be replaced by a water cell for NMR calibration (see Section 12.9), a solid BeO target inline with a seven-foil Carbon target for alignment and optics calibration, a "hole" target for alignment, an empty target position that contains no target and allows the beam to pass undisturbed through the apparatus, and a reference cell position (see Section 12.11). These targets are mounted on a target ladder as shown in Fig. 12.5.

The target ladder can be positioned vertically using a stepper-motor-driven motion control system. The controller can drive the ladder to six different fixed positions, four of which correspond to the four targets, the fifth to the empty (no target) configuration, and the sixth to the position used for NMR measurements where the target cell is surrounded by the pick-up coils.

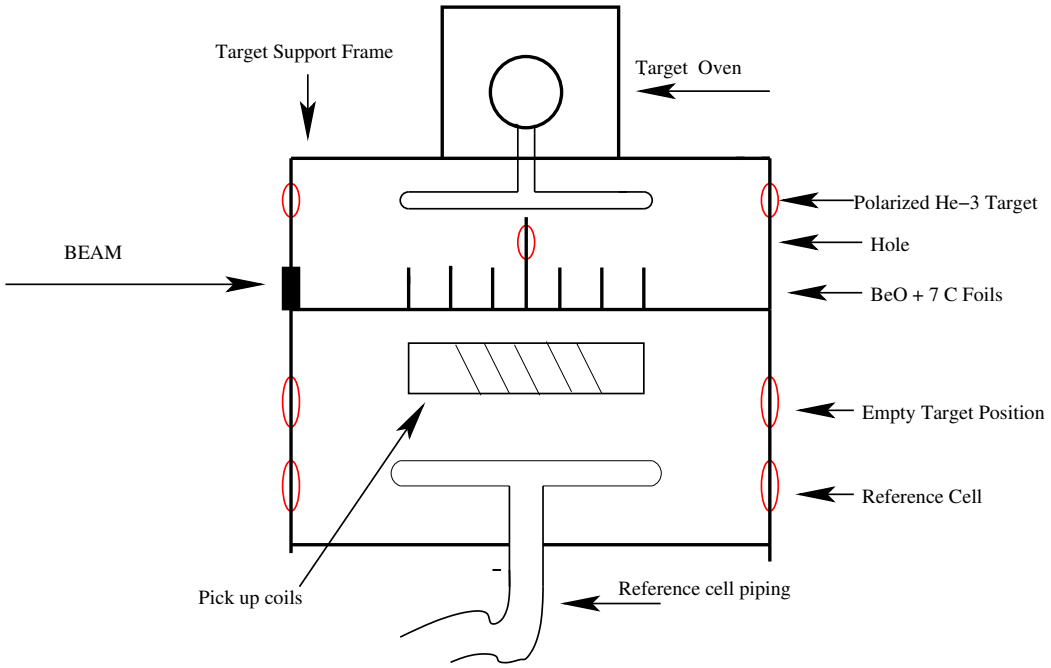

Figure 12.5: Schematic diagram of the target ladder and target positions.

The motion controller employed was developed at JLab and has been used for previous experiments. Vertical target motion is provided by a screw-driven cylinder (Industrial Devices Corporation model N2P22V1205A12MF1MT1L). The cylinder incorporates a 200 step/rev stepper motor with a 1:12 gear, resulting in a position repeatability of about $\pm 13\,\mu$m at a maximum load of 600 lbs (272 kg). The maximum range of motion is 31.5 cm. Mechanical position sensors are mounted on the target support frame to indicate motion limits. These switches are wired normally closed and fail open. A magnetic position sensor (Reed Sensor, PSR-1Q) mounted on the motor cylinder serves as the home switch. This switch is wired normally open, using only two of its three wires (12 V is not connected for this type of switch). Additionally, a linear potentiometer provides independent readback of the cylinder position.

12.5.2 Operation

The motor can be controlled locally and remotely. Local control is provided through the SmartStep 23 keypad controller. The keypad allows the target to be jogged into position. It also allows for small codes to be saved which will move the target ladder into preset target positions. Remote control is provided through the EPICS environment. During norml operation, target motion is controlled through the lifter MEDM GUI running on one of the computers in the Hall A counting house. The GUI has buttons for preset target positions, as well as lights indicating the status of the controller (i.e. any faults,

at a limit, etc.). The velocity, acceleration time, deceleration time and position can also be manually set from the GUI, but the defaults should be correct for all but special situations. The position of the motor is readback on the GUI. This position is displayed in revolutions from the home position and can be compared with preset target positions.

The electronics provide a Fast Shutdown (FSD) interlock signal to the accelerator that is triggered whenever the target is moved with the beam on. This prevents damage to the target cell and ladder due to the electron beam. The FSD signal is generated by the SmartStep controller and sent to an FSD node in the Hall. Target changes require Hall A personnel to telephone MCC and request temporary masking of this FSD channel.

12.6 Target Enclosure & Windows

The target is surrounded by an enclosure. . The enclosure serves three purposes: First, it is part of the laser light enclosure. Second, it provides a containment volume in case of explosion of the target cell and so limits the potential hazard working area. Third, it allows the region around the target to be filled with helium gas, minimizing ionization and energy loss of the electron beam crossing the target area.

The enclosure is made fiber glass material and part of the middle section is removable for access to work in the target area. The material at the forward part where the scattered particles passing through is 0.762 mm thick. The other parts are thicker.

If the middle section is open, people working anywhere on the *target platform* must wear ear protection and a face shield. Lasers should have been turned off and optics fiber ends be locked away following the lock-and-tag procedure. This region is designated as the "target area". Signs will be posted indicating that the enclosure is open and that work is in progress. If the enclosure is closed the target area is no longer restricted except for possible reasons of radiation safety.

The electron beam line is under vacuum and separate from the target enclosure for both upstream and down-stream of the target enclosure with the enclosure windows. The beam inlet and outlet windows of the target enclosure are made of 0.254 mm and 0.508 mm thick Be and are strong enough to stop any flying glass shards in case of a target cell explosion. Each Be window has an additional 0.076 mm thick aluminum foil cover to protect it from exposing to air.

12.7 Target Cell Heater

The target pumping cell must be kept at a temperature of about 230°C for optical pumping of Rb-K to be effective. This is accomplished by flowing hot air through a special temperature-resistant enclosure ("oven") around the pumping cell and regulating the temperature of the air using a process controller. The system is described in detail in the following.

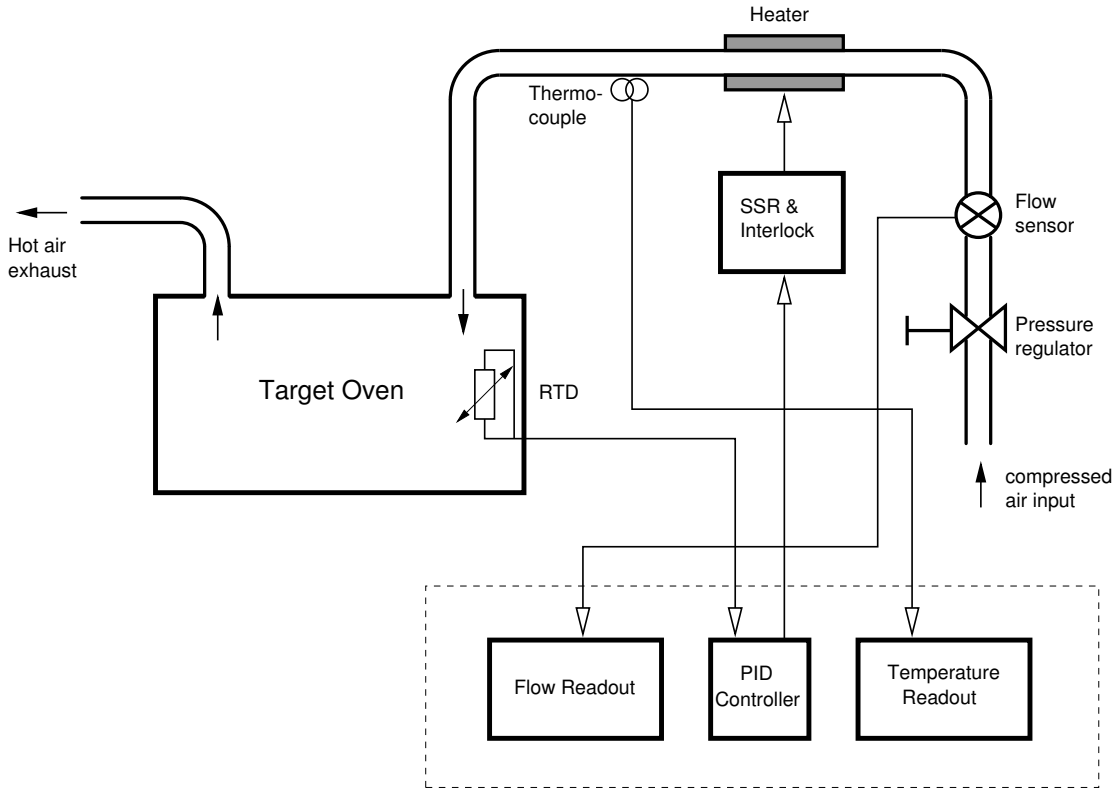

Figure 12.6: Schematic diagram of the target cell oven control system. The instruments in the dashed box are located upstairs, while the remaining components are located in the Hall in the vicinity of the target. For clarity, the interlock circuitry is not shown (see Fig. 12.7).

12.7.1 Description

Fig. 12.6 shows a schematic diagram of the heater system and the associated controls. Pressurized dry and filtered air at room temperature is provided by a dedicated compressor in the Hall. The air enters the system through a shut-off valve and a pressure regulator, which is typically set to an output pressure of 15 psi. The flow rate is measured with a gas velocity sensor (Omega model FMA-905) connected to a display unit (Omega DP41-E-S2R) that provides an alarm to indicate insufficient flow. The air then passes through two resistive heaters (120 VAC, 1200 W) and continues through insulated copper tubing into the target oven. The oven material is ceramic which can withstand a temperature of at least 300°C continuously. The air finally exits the system through an exhaust pipe where it can cool down. Both inlet and exhaust pipes are inside the oven supporting tube filled with insulation material.

A 100Ω Pt RTD (Omega model F3105) measures the temperature inside the oven. A process controller (Omega CN77540-C2) operating in PID mode drives the heater

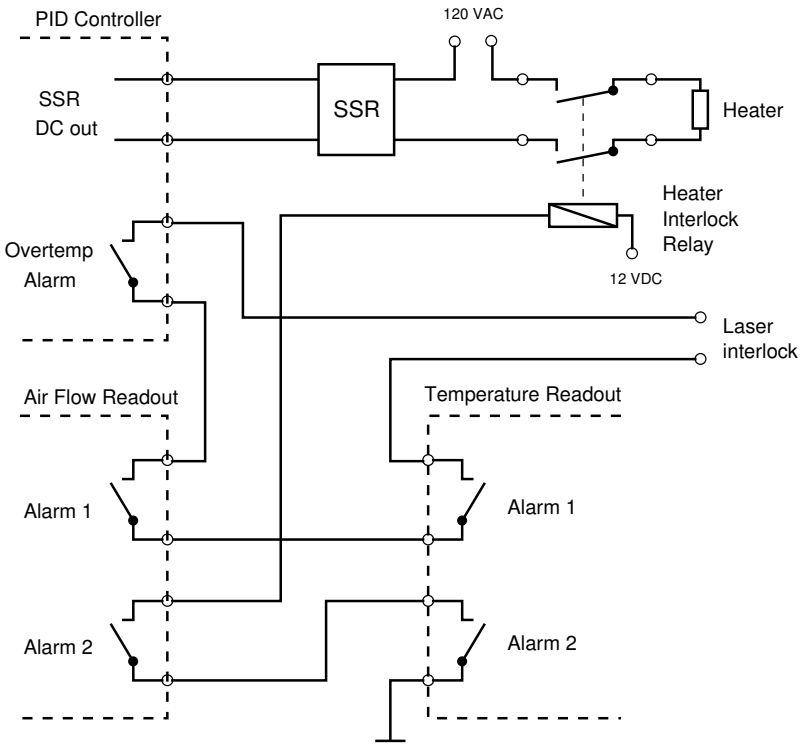

Figure 12.7: Schematic diagram of the oven heater interlock system. The switches represent relays. In normal operation, the relays are energized (contacts closed). An alarm condition (or instrument power failure) will de-energize (open) the corresponding relays, interrupting the interlock circuit. The instruments are programmed such that their dual alarm outputs operate simultaneously.

via a solid-state relay (SSR) regulating the heater power dependent on the temperature detected by the RTD. The SSR (Omega model SSR240DC10) accepts a low-voltage (3 − 32 VDC) control signal of about 30 mA. A mechanical relay between the SSR and the heater allows interruption of the 120 VAC heater power in case of a malfunction (see subsection 12.7.2).

A thermocouple (Omega 5SC-GG-K-30-36) is mounted on the tubing right after the heater to allow monitoring of the temperature of the air exiting the heater. Another display unit (Omega DP41-TC-S2R) reads the thermocouple and generates an alarm if the temperature exceeds a preset threshold.

The PID controller as well as the two display units are installed in a 19" chassis in the electronics racks on the second floor of the counting house where they can be manually operated if necessary. All other components are located in the Hall in the vicinity of the target. The instruments can be monitored and programmed remotely via serial RS-232 communications, which allows convenient control via an EPICS/MEDM graphical user interface (GUI) in the counting house.

12.7.2 Safety Considerations

The heater system represents a significant fire hazard and therefore requires good failsafe protection. Possible failure modes include:

1. Insufficient air flow. Possible causes: Compressor failure; obstruction in filter; operator error. Possible harzards: Overheating of heater element, resulting in equipment damage and/or fire. Protection: Air flow is monitored; insufficient flow disables heater (and laser) via hardware interlock.

2. Heater overtemperature. Possible causes: Insufficient airflow; temperature controller failure; RTD failure; operator error. Possible hazards: Damage to heater element and/or tubing; fire. Protection: Heater temperature is monitored; excessive temperature disables heater (and laser) via hardware interlock.

3. Oven overtemperature. Possible causes: Temperature controller failure; RTD failure; insufficient air flow; excessive laser power; operator error. Possible hazards: Explosion of target cell; damage to oven enclosure and/or optical elements; fire. Protection: Temperature controller will generate alarm if RTD indicates excessive temperature, disabling heater via internal logic and and laser via hardware interlock.

A schematic diagram of the interlock system is shown in Fig. 12.7. The instruments are programmed such that their dual alarm relays operate simultaneously if a value is out of range. An interlock condition disables the heater as well as puts the lasers in standby mode. Interlocking the lasers is important as the laser light contributes significantly to the heating of the target oven.

12.7.3 Operation

The oven can be controlled from a GUI running on one of the Hall A counting house computers, or manually using the front panel controls.

12.7.3.1 Local Operation

A brief description of the manual operating procedure is given here:

1. The oven controller and temperature and flow displays are located in a 19" chassis in one of the racks upstairs. Make sure power to this chassis is on. The green light on the front panel should be lit.

2. Verify the alarm set points for the flow meter and temperature indicator. Press the `SETPTS` button until the display shows `SP3`. After about 1 second, the setpoint value appears. It should be 250 for the air flow display and 220 for the temperature display. Press `SETPTS` again and check setpoint `SP4`. It should be identical to `SP3`.

   To change any of the values use the `MIN` and `MAX` buttons. The `MIN` button selects the digit to be changed whereas the `MAX` button changes the value of the currently selected digit. Press `SETPTS` again to store the new value. When finished, press `SETPTS` until `RUN` appears in the display.

3. Verify the current temperature of the oven. It is shown in the upper (red) display of the temperature controller and is labeled `PV` for "Process Value". The units are °C. The value should be reasonable, *e.g.* around room temperature if the oven has been off for several hours or more. If the value does not make sense, either the controller is misconfigured (see below) or the RTD in the oven is broken or incorrectly connected. Do not proceed before you have a sensible reading.

4. (Optional) Verify the correct configuration of the controller. Use the `MENU` button on the controller to scroll through the various configuration menus. To inspect parameters within a menu, press `ENTER` followed by `MENU` again. The suggested default parameters are listed in Tables 12.2 and 12.3. This step is time-consuming and can be skipped if you are relatively certain that the configuration is ok. A detailed description of the controller parameters is given in the controller manual.

5. Verify that air is flowing. The air flow readout should indicate a value of 350–450. These are arbitrary units. As long as the heater is off, the reading should not fluctuate by more than about ±10 units.

6. Verify the current temperature of the heater. It should be close to room temperature. If the value is unreasonable, either the readout is misconfigured or the thermocouple is broken. Do not proceed before the problem is corrected.

7. Verify that alarms are reset. Underneath the main display there are four LEDs, one for each alarm 1–4. If either LED `3` or `4` is on on either instrument, it indicates

that an alarm has been triggered and that the system is interlocked. You must reset the alarms before you can continue. To do so, first correct the problem (*e.g.* turn the air flow on) then press `RESET` once on the affected instrument(s). If the LEDs stay on despite correct setpoints and readings, the instrument is probably misconfigured.

8. Begin heating. To avoid damage to the oven, the temperature must be increased to the final value slowly. A good final operating temperature is 170°C, and a good ramping rate is 60°C/h, *i.e.* heating of the oven will take about three hours to complete.

   In manual mode, you must enter a new temperature setpoint by hand at fixed time intervals. ("Ramp and Soak" does not seem to work reliably with this controller.) You should increase the value by 10°C every 10 minutes. For example, if the current oven temperature is 35°C, start with a setpoint of 45°C and increase this value by 10°C in approximately 10 minute intervals.

   To enter a new setpoint, do the following

   (a) Press `MENU` on the temperature controller. A little green light marked `SP1` in the upper left corner of the display will start to blink. Also, the first digit of the green numerical display, labeled `SV` for "Setpoint Value", will blink.

   (b) Use `MIN` to select the digit you wish to change and `MAX` to modify the value.

   (c) When done, press `ENTER`. The display will briefly show `run` when the controller enters normal operating mode. This starts the heating process.

9. Check correct operation of the controller. A little green light marked `SP1` in the upper left corner of the temperature controller display indicates that the heater is active. This light should blink slowly, being mostly on while the oven is heating up and being mostly off (or even completely off for periods of up to a few minutes) when the oven temperature has reached the setpoint.

   The heater temperature should increase proportionally to the fraction of time that the `SP1` indicator is on. Note that the temperature reading is *not* directly related to the oven temperature. In particular, the heater may become significantly hotter than the oven, and its temperature might fluctuate from almost room temperature to high values over short periods of time as the heater power is automatically cycled on and off by the controller. As long as the temperature stays below the alarm threshold (220°C) there is no reason for concern.

10. Check stability of the final temperature. The temperature might overshoot slightly. If the overshoot is less than about 5°C then this is normal. If the stability is poor it is probably due to incorrectly set PID parameters in the controller. Changing these parameters is best done by an expert since this requires in-depth understanding of the system.

The laser contributes significantly to the heating of the oven. Therefore, you will notice sudden temperature instabilities when the laser is turned off or on. It will take several minutes for the controller to compensate for such changes.

11. The air flow rate is slightly dependent on the heater power applied (conductance varies with temperature). Therefore, the flow rate will fluctuate by some 10-20%. This is normal.

12. At any time you can place the controller in standby mode by pressing `ENTER` twice. The display will show a blinking text `STBY`. This will turn the heater off completely and can be used when the system appears to malfunction. However, exercise some caution if the oven is at an elevated temperature since it will quickly cool down if heater power is disabled and you will lose time bringing it back up to operating temperature.

13. In an emergency, simply turn the power to the chassis off completely. This will open the interlock loops, thereby cutting power to the heater and placing the laser in standby mode.

12.7.3.2 Remote Operation

1. Make sure the power is on to the Oven Heater Controller Chassis as described above. Also verify the alarm set points for the oven air flow and heater temperature as above.

2. Verify the current temperature of the oven. It is shown on the GUI on the blue HacOMEGA_RTD readback. It's shown on the meter and also in the readback box. Also, a plot of oven temperature vs time is shown on the stripchart in the bottom-left of the GUI (labelled oven temperature). The units are °C. The value should be reasonable, *e.g.* around room temperature if the oven has been off for several hours or more. If the value does not make sense, either the controller is misconfigured (see directions for manual control above) or the RTD in the oven is broken or incorrectly connected. Do not proceed before you have a sensible reading.

3. Verify that air is flowing. The air flow readout should indicate a value of 350–450. These are arbitrary units. As long as the heater is off, the reading should not fluctuate by more than about ± 10 units.

4. Verify the current temperature of the heater. It should be close to room temperature. If the value is unreasonable, either the readout is misconfigured or the thermocouple is broken. Do not proceed before the problem is corrected.

5. Verify that alarms are reset. The alarms are reset by pressing the "Reset" button in the upper-left of the GUI.

Menu	Submenu	Setting
Output Redirection		S1.o1
Input Type		RTD
	RTD Type	385.3
	RTD Value	100_
RDG Configuration	Decimal Point	FFF.F
	Temperature Units	°C
	Filter Constant	0004
Alarm 1		Enabled
	Type	Absolute
	Latched	Latched
	Contact	n.c.
	Setup	Above
	Power On	Enabled
	Low Value	(anything)
	Hi Value	210.0
Alarm 2		Not Installed
Loop Break		Disabled
Output 1	Self	Disabled
	% Low	0000
	% High	0095
	Control Type	PID
	Action Type	Reverse
	Auto PID	Disabled
	Adaptive Control	Disabled
	Anti Integral	Enabled
	Start PID	Disabled
	Proportional Band	0038
	Reset Setup	0050
	Rate Setup	0000
	Cycle Time	0001
	Damping Factor	0001
Output 2	(any)	(anything)

Table 12.2: Suggested default parameters for the temperature controller.

Menu	Submenu	Setting
Ramp & Soak	Ramp	Disabled
	Soak	Disabled
Analog Output		Not installed
Communication Option	Baud	9600
	Parity	Odd
	Data Bits	7bit
	Stop Bits	1bit
Bus Format	Checksum	no
	Line Feed	no
	Echo	no
	Standard	232C
	Mode	Command
	Separator	Space
Data Format	Status	yes
	Reading	yes
	Peak	no
	Valley	no
	Unit	yes
	ID	no
Address Setup	(any)	(anything)
Transmit Time	(any)	(anything)
Remote Setpoint		Not installed

Table 12.3: Suggested default parameters for the temperature controller (continued).

6. Begin heating. To avoid damage to the oven, the temperature must be increased to the final value slowly. A good final operating temperature is 230°C, and a good ramping rate is 60°C/h, *i.e.* heating of the oven will take about four hours to complete.

   In controlling the Oven Temperature from the GUI, you must enter a new temperature setpoint by hand at fixed time intervals. Enter the desired setpoint in the "SP1" enter box in the lower right of the GUI. You should increase the value by 10°C every 10 minutes. For example, if the current oven temperature is 35°C, start with a setpoint of 45°C and increase this value by 10°C in approximately 10 minute intervals. The heater is controlled in PID (proportional, integral, derivative) mode. It approaches the setpoint according to the PID parameters defined in the "Prop. Band", "Reset" and "Rate" boxes in the lower-right of the GUI. These values can be changed, but the defaults should be fine except for special circumstances.

7. Check stability of the final temperature. The temperature might overshoot slightly. If the overshoot is less than about 5°C then this is normal. If the stability is poor it is probably due to incorrectly set PID parameters on the GUI. Changing these parameters is best done by an expert since this requires in-depth understanding of the system.

   The laser contributes significantly to the heating of the oven. Therefore, you will notice sudden temperature instabilities when the laser is turned off or on. It will take several minutes for the controller to compensate for such changes.

8. The air flow rate is slightly dependent on the heater power applied (conductance varies with temperature). Therefore, the flow rate will fluctuate by some 10-20%. This is normal.

9. At any time you can place the controller in standby mode by pressing the "Standby" button in the upper-left of the GUI. This will turn the heater off completely and can be used when the system appears to malfunction. However, exercise some caution if the oven is at an elevated temperature since it will quickly cool down if heater power is disabled and you will lose time bringing it back up to operating temperature.

10. In an emergency, simply turn the power to the chassis off completely. This will open the interlock loops, thereby cutting power to the heater and placing the laser in standby mode.

12.8 Helmholtz Coils

The Helmholtz coils are six large rings of coils that provide a large constant magnetic field. Three sets are necessary so that the magnetic field can point in any direction in the horizontal plane. The larger pair horizontal coils each has an inner diameter of 1.45

m and consists of 272 turns of coil. The smaller set of coils each has an inner diameter of 1.27 m and is made of 256 turns of coil. Each pair of the horizontal coils has a resistance of 3 Ohms. The vertical coils each has an inner diameter of 1.83 m and consists of 355 turns of coil. The pair of vertical coils has resistance of 4.4 ohms.

The normal holding field for the target is 25 Gauss which corresponds to approximately 7.2 Amps of current and 25 Volts in the horizontal coils and 7.4 Amps and 33 Volts in the vertical coils. However, when doing an NMR measurement the field gets as high as 32 Gauss, which corresponds to 9.2 Amps and 32 Volts in the horizontal coils and 9.5 Amps and 42 Volts in the vertical coils. The maximum field will not exceed 35 Gauss, which corresponding to 10.0 Amps and 35 Volts for the horizontal coils and 10.4 Amps and 46 Volts for the vertical coils.

The horizontal coils are power by two KEPCO BOP 36-12D power supplies. The maximum range of power supplies is 12 A and 36 V. The power supplies are controlled by a DC voltage from two Stanford Research System DS345 Function Generators. These are in turn controlled by a LabView Vi running on a PC. There is a small glitch in the DS345 function generator : there sometimes will be a short drop in voltage before going to the correct voltage. This is a problem when rotating the field, since it causes sudden magnitude shifts which in turn destroy a little of the target polarization. This glitch is compensated for by a specially designed rotation box to which a Wavetek 80 function generator is attached. This function generator compensates for the small decrease in voltage so that the rotation can be performed smoothly.

The vertical coils are powered by an Agilent 6675A power supply. The maximum range of power supply is 18A and 120 V. The operation condition for the magnet is typically 25-32 Gauss. The maximum field will not excced 35 Gauss, which corresponding 10.4 A and max 46 V. The power supply is controlled by a LabView Vi running on a PC.

Hazards associated with the operation of the target magnet include exposure to voltage and exposure to magnetic field. All Hazards are mitigated by the use of the engineering and administrative controls detailed below.

The power supply is located in an electronics rack. Two insulated cables connect the power supply to the magnet. The voltage hazards are electrical shock or burns.The hazards are mitigated by:

- Engineering control:
  - Connectors are covered with insulated material.
  - Magnet is grounded.
  - Electronic rack is grounded.
- Administrative controls:
  - Warning signs in front of the power supply and on the magnet wall.
  - Voltage to be used is not to exceed 48 V for the Agilent power supply.

In addition, there is a hazard associated with magnetic field. The maximum magnetic field is 35 Gauss inside the magnet. A warning sign will be posted around the target area. No person with pace maker will be allowed around the target area.

The following personnel have received the proper training. They are the only ones authorized to operate the power supply and the magnets. Names may be added with authorization from the supervisor of the system (Jian-ping Chen, x7413).

Name (first,last)	Dept.	Call [4]		e-mail	Comment
		Tel	Pager		
Jian-Ping Chen	JLab	7413	584-	jpchen@jlab.org	*Contact*
Chiranjib Dutta	Kentucky	OFF		chiran@jlab.org	
Joe Katich	CWM	5332		jkatich@jlab.org	
Yi Qiang	Duke	7237	584-	yqiang@jlab.org	
Vince Sulkosky	JLab	5487	584-	vasulk@jlab.org	
Yi Zhang	Lanzhou	OFF		zhangyi@jlab.org	

Table 12.4: Polarized ^{3}He target: personnel authorized to operate the power supply and the target magnets

Attached to the horizontal Helmholtz coils are two smaller sets of coils. These consist of 20 loops of 16 AWG wire attached to smaller DC power supplies. They can be used to compensate for field gradient to minimize AFP polarization loss. These coils can also be used to introduce a field gradient to reduce masing effect.

12.9 NMR Polarimetry

This guide explains briefly how to perform safely an NMR AFP sweep on the polarized ^{3}He target. Figure. 12.8 shows the target setup and explaining the angle conventions of the polarized target system.

12.9.1 NMR polarization measurement

An automatic NMR measurement will be performed every time the target spin gets flipped. Each of these measurement includes:

- AFP flip of ^{3}He triggered by RF frequency sweep;
- Laser polarization change by rotating Q-wave plates;
- NMR data recording and automatic polarization calculation;
- Spin state determination;
- Automatic log entry.

For a manual NMR measurement, it has the following steps:

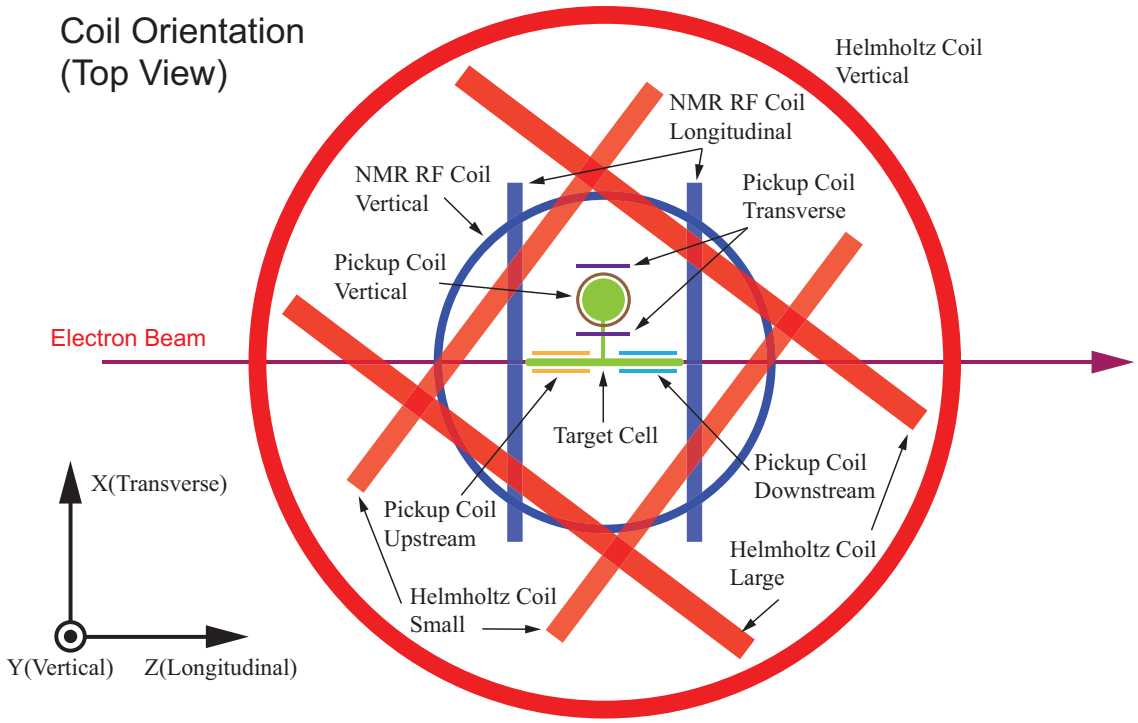

Figure 12.8: Top view of the coils used in the ^{3}He target setup. The combinations of the 3 pairs of Helmholtz coils power the main holding field to either longitudinal, transverse or vertical directions while 3 lines of lasers are available as well in these three directions to polarize the target. The two sets of RF coils are needed to flip the target spin for NMR and EPR measurements with different setups field direction. Four pairs of NMR pick up coils are used during the flips to read out the polarization strength. Two of the pairs are located below the beam line to measure the NMR signal from upstream and downstream part of the target chamber. The other two of the pairs are fixed in the target oven to measure the NMR signal from the pumping chamber.

- Turn OFF the lasers (optional).
- Make sure the target is in the Helium 3 (beam) position.
- Make sure the correct RF coil is connected to the impedance match box output: use Longitudinal RF coil for Transverse or Vertical polarization and use Vertical RF coil for Longitudinal polarization.
- Make sure corresponding impedance is selected in the impedance match box.
- Turn ON the NMR RF amplifier.
- Make sure the Pumping chamber Lock in amplifier get the signal from correct pick up coil: use Vertical pickup coil for Transverse polarization and use Transverse pickup coil for Vertical or Longitudinal polarization.
- Make sure the coil current and oven temperature readings are normal.
- Call MCC to mask the beam and make sure the target is masked before doing anything further. In case NMR signals from target chamber are wanted (only for Vertical and Longitudinal polarization), move the target down to the pick-up coils.
- Run the NMR Measurement VI.
- Load appropriate parameters by clicking "Load Default" button.
- Start NMR Measurement.
- Check result and submit log entry by inputing required info.
- Exit the NMR VI.
- Move the target back to beam position if previously moved to pickup coil position.
- Call MCC, tell them you have measured the polarization and that the target is back to its beam position. Be sure to follow the beam back procedure before sending the beam back to the target (beam position, raster ON and beam current.)

12.9.2 Warnings

- Never stop a running LabVIEW VI (Normally you can't but don't try to hack it);
- Never put CW beam ON the target without raster;
- Every target operator must read and sign the Target Operation and Safety Procedure;
- If the target ruptures, turn OFF the lasers immediately, and then turn off the heaters;

Coil	Radius (m)	Turns	Power Supply	I_{Max} (A)	V_{Max} (V)
Small	0.667	256	KEPCO	10	35
Large	0.758	272	KEPCO	10	35
Vertical	0.946	203	HP6675A	18	49

Table 12.5: Maximum condition of the power supplies during ^{3}He target system operation (35 Gauss).

- The lasers must be OFF before rotating the holding field;
- Do not manually change the voltage of the HP6675A;
- We indicate on Table 12.5 the voltage and current values for each coils power supply.

12.9.3 NMR AFP Safety

The NMR AFP system provides the DC current in the holding coils (up to 18 A) and the AC current in the RF coils (usually 1 A rms) of the target setup. Any human contact with the wires could be fatal and should therefore be avoided. The electronic devices and the PC used to sweep are located in the Counting House and Hall A. Refer to Fig. 12.9 and Fig. 12.10 for a description of the electronics.

12.9.3.1 The DC current

The DC currents are produced by two KEPCO and one Agilent power supplies located in a rack behind the green wall in Hall A. One KEPCO drives the large horizontal coils, and the other drives the small ones, as stamped on their front panel. The Agilent drives the vertical coils. The output of each KEPCO consists of four wires, two to lead the current, and the two others used for sensing. The Agilent has two wires. The output plugs are located on the back panel of each power supply which can only be reached through the back panel of the rack. All connections are protected either by plastic strips or covers and can not be touched directly by hands. At the coil end, simple metal screws are used to connect those wires to the coils. The connections to the horizontal coils are wrapped by electric tape and the connections to the vertical coils are shielded by shrink tubes. They should never be touched while power is ON. All power supplies are grounded to the ground of the hall.

12.9.3.2 How to turn the Power Supplies OFF in an emergency?

1. Turn the Function Generators SRS DS345 OFF (one for each coil) by pressing the ON/OFF switch.
2. Turn the KEPCO power supplies OFF by setting the manual ON/OFF switch to the OFF position. The digital displays should turn OFF.

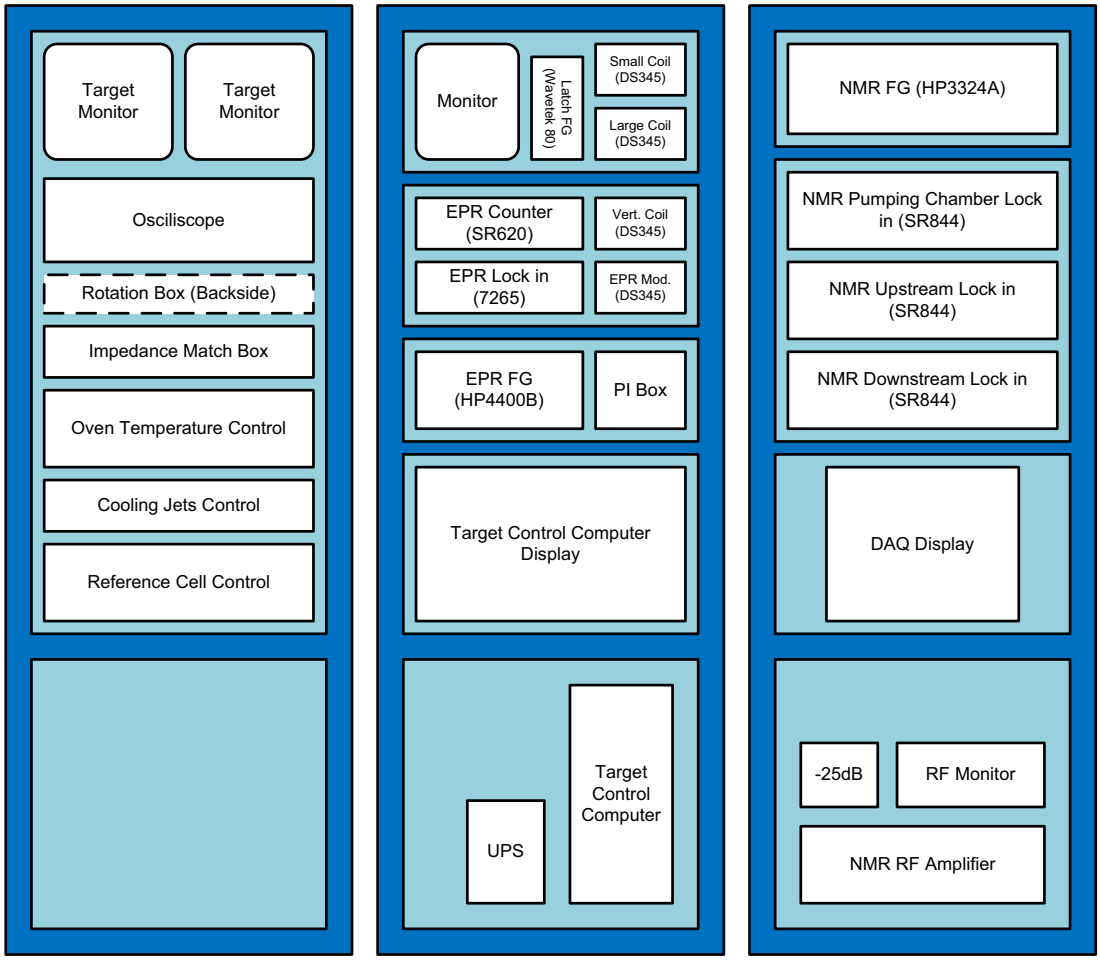

Figure 12.9: The electronics located in the Hall A Counting House.

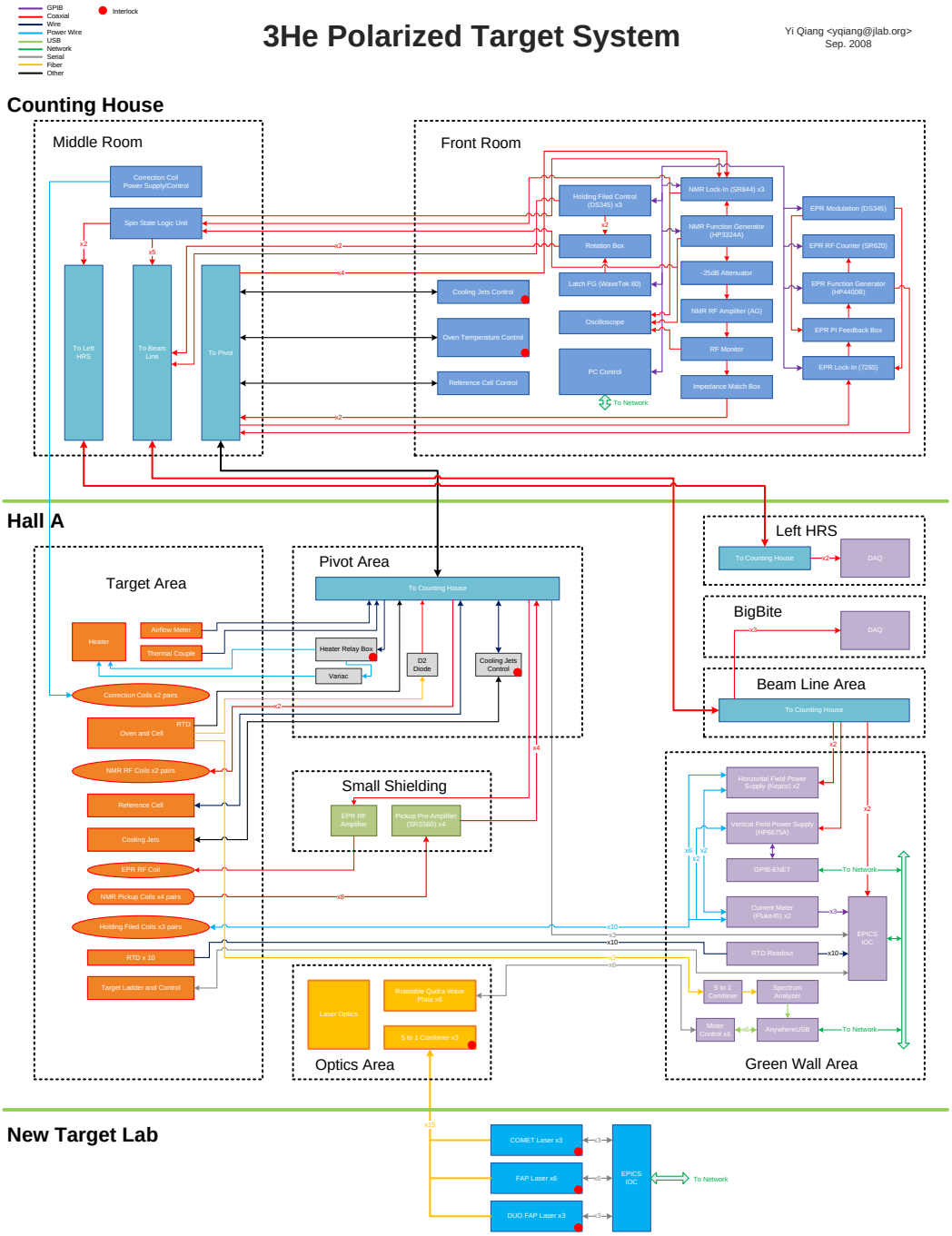

Figure 12.10: Complete diagram of Hall A ^{3}He target system.

3. Turn the Agilent ON/OFF switch to OFF.

12.9.3.3 The AC current

It is produced by the AG Series Power Amplifier located at the bottom of the right rack in counting house. When it is running, the power switch is set to the ON position, the yellow LED is steady and the display shows loaded power above zero. The AC current comes out from the BNC OUTPUT plug, goes through a current monitor (looks like a small toroid) and finally goes to the RF coils. In the hall, the cable is connected to the RF coils along the RF mounting using simple connectors with screws. Those are protected by electrical black tape. They should never be touched when the RF Power Amplifier is running. The grounding of the system is provided by the RF Power Amplifier.

12.9.3.4 How to turn the RF Power Amplifier OFF in an emergency?

1. Turn the Function Generator HP 3324A connected to the RF Power Amplifier OFF.
2. Turn the RF Power Amplifier OFF by setting the power ON/OFF switch to the OFF position. All LEDs should turn OFF.

Detailed description of the NMR system is contained in the Hall A wiki page: http://hallaweb.jlab.org/wiki

12.10 EPR Polarimetry

In what follows we describe two methods to setup and perform an EPR measurement of the target polarization.

12.10.1 EPR Lineshape Measurement – Frequency Modulation Sweep:

Use this configuration when you wish only to find the Electron Paramagnetic Resonance (EPR) frequency, not actually track its position. This method allows the user to observe the lineshape of the EPR transition (Rb D2 line or K lines) light emitted from the cell as a function of applied frequency to the EPR coil.

First, construct the circuit described in Fig. 12.10.1 by following these steps:

1. Position the EPR optical fiber so that it looks directly at the light beam coming from the cell. Adjust and align the focusing lenses such that most of the light is collected through the optical fiber and reaches the PIN diode.
2. Measure PIN diode output, it should be a DC signal with an amplitude of -100 mV to -150 mV (could be as high as -230 mV). If the signal is less than -100mV, check the light and PIN diode again.

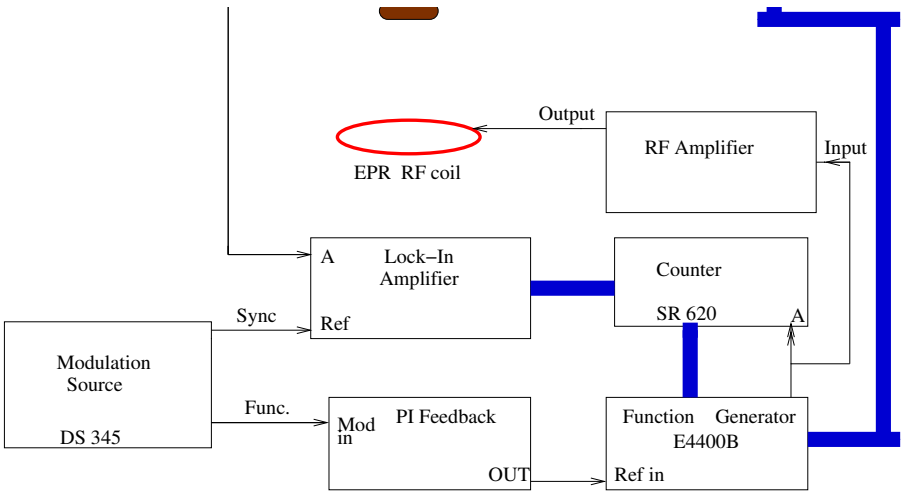

Figure 12.11: Circuit for EPR lineshape measurement

3. Set Lock-in amplifier parameters:
   AC Gain: 50 dB; Input Limit: 10 mV;
   Sensitivity: 1 mV; DR 16;
   Time Constant: 100 ms; Osc: 0.000 Hz;

4. Connect PIN diode to input A of the Lock-in amplifier.

5. Set Modulation source DS345 parameters:
   Function: sine wave;
   Sweep/modulate: LIN SWP.

6. Connect DS345 'output' to PI circuit 'mod in', DS345 'sync output' to Lock-in Amplifier 'ref in'.

7. Set PI circuit Integration off, make sure the input is disconnected.

8. Set the parameters for the function generator E4400: FM: ON, RF: ON, Source:External DC, Dev: 20 KHz, Gain: -5dB (range is from 0 to -10 dB depending on the sintuation), Frequency: 10 MHz to 24 MHz (you need to set the frequency limit according to Rb or K resonance. At this monent this is controlled by the EPRFM.VI. So dont have to worry about it).

9. Connect the RF output of E4400B to the RF amplifier and also to the A input of the counter SR620.

10. Do not connect the lock-in back output to the INPUT of the PI box. Leave that INPUT OPEN.

11. Connect the OUTPUT of the PI box to the INPUT of the E4400.
12. Turn INT GAIN OFF.
13. Turn the RF amplifier ON.
14. Make sure you have exactly the same circuit as in the figure.

Now that the circuit is in place, open the LabView program "EPRFM.VI".

1. RUN it.
2. Set the Start Freq and stop frequency according to your wish .i.e. the range mentioned above.
3. Set the step size to 0.01 MHz for a quick scan. Or 0.005 MHz for a nominal scan.
4. Set the lockin time constant to 100 or 200 ms (should try both).
5. Set the lockin sensitivity to 200 uV/ 500 uV/ 1mV nominal.
6. Set the FM dev to 20 KHz first. Later need to be adjusted and make it larger depending on the signal.
7. Set the gain to -5 dB (might need to adjust later, but no less than -12 dB otherwise the counter will not register signals).
8. Do not worry about the phase of the lock-in now.
9. Set the modulator frequency to 100 Hz and the amplitude to 1.5 Vpp.
10. START SWEEP.
11. Once you have the lineshape signal, PLOT it. Choose /select the linear regions of both channels (X and Y). FIT with order 3 unless it is really linear. Once you fit, take a look at the calculated PHASE (Just take a look, nothing needs to be done).
12. SET PARAMETER and click on I KNOW I KNOW.
13. START SWEEP again. This time you should see all the signal is in one channel (X usually unless the program is broken) and you have the correct phase.
14. Repeat steps 9 to 11 again. In step 10, this time you probably can use FIT ORDER 1. When you are done with the SET PARAMETER and I KNOW I KNOW, record the number of turns for the gain in the PI box. Make sure that the overall gain we are shooting for is -0.5. It is the default value in the VI . But if you find its different, SET IT TO -0.5 and RECALCULATE the number of turns again. This NUMBER OF TURNS in the PI gain is the heart of our measurement.
15. Save the datafile if the data look reasonable to lock the signal in the next AFP step. Usually K signals are larger than the Rb signal at a temperature of ≈ 230°C. Anything above 20 mV is good enough for AFP.

12.10.2 Common Problems

1. The plot shows no peak/dip.
   - Check the PIN diode and light, make sure there is enough light.
   - If the PIN diode signal amplitude is above 100 mV already, try changing the Lock-in Amplifier phase by 90°.
   - If still no peak is detected, try changing the start sweep frequency and the number of steps such that the program will cover larger region.
2. The plot shows multiple peaks. It might be the signal is mixed with background (cable resonance, noise etc.). The solution might be complicated and will not be discussed here. Contact target experts on call.
3. How do I use the output data? The data is saved in a text file consisting of two columns. The first column contains the frequency of the EPR coil, while the second column holds the corresponding signal from the Lock-in Amplifier. Its format can be read by programs such as SigmaPlot, Excel, and Paw.

12.10.3 EPR Polarization Measurement – AFP Sweep

This configuration uses the lock-in amplifier with a PI feedback box to lock into the EPR resonance frequency and then track its behavior. With AFP spin-flip, a shift in EPR resonance frequency will be measured, which is proportional to the pumping cell polarization.

Once you are done with the FM sweep and have the number for the turns for the GAIN for the PI box, follow the procedure below to get the AFP sweep done.

1. Refer to the circuit diagram. Start from the configuration as you were doing FM sweep.
2. Connect the lockin output from the back of the lockin to the INPUT of the PI box.
3. SET the GAIN to the number you have got from the FM sweep vi.
4. Open EPRAFP.VI
5. RUN it. SET the DEFAULT parameters. Frequency 78 to 92 KHz. V_rms to 0.8 V.
6. Set it to MANUAL or AUTO. If AUTO, SET the wait time to 15 sec/20 sec.
7. POWER ON. You will see the frequency (GREEN) in the first plot, frequency fluctuation in the second plot and lockin signal in the third plot. Just dont worry about those at this moment.

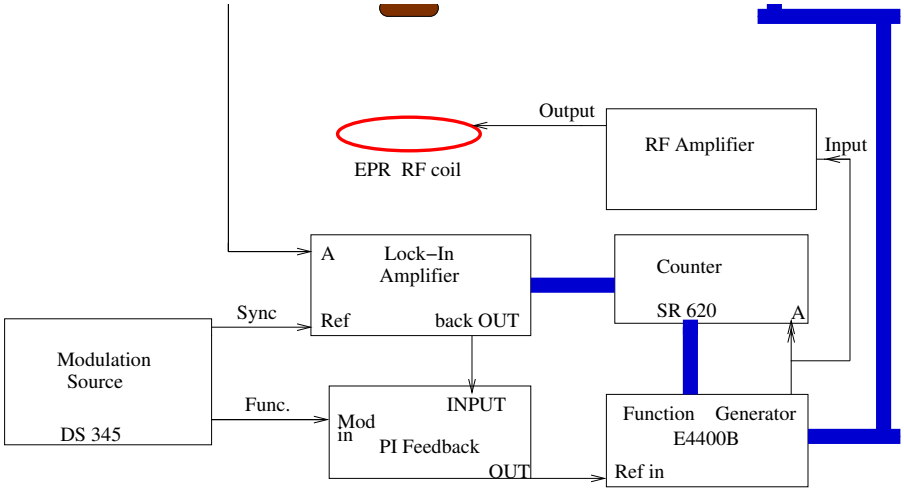

Figure 12.12: Circuit for EPR measurement with AFP spin flip

8. SET the Integration gain at knob to 1 first in the PI box. Usually between 1 to 2 should be okay. But you have to play around. (The magic numbers we found is 1 to 1.2 for 100ms time constant and 1.5 to 1.7 for 200ms time constant)

9. TURN the INT GAIN ON in the PI box. You should see in the third plot the lockin signal approaching 0 ± 5 mV is okay. If not, try to increase the INT GAIN slowly till you feel comfortable.

10. WAIT for a couple of seconds.

11. START SWEEP. You should hear a "click" and see a drop or rise in the frequency ("well" or "hat" shape) in the first plot.

12. If you are doing it MANUALLY, wait for 10 to 15 sec in that flipped state and hit "START SWEEP" again to get back to the original state. If you feel you need more data in that flipped state, wait for another 10 sec.

13. Repeat the above two steps one more time or two.

14. Make sure you end up in the original state. Then POWER OFF. SAVE the data.

15. *Never stop the program during sweeping, this could cause the ^{3}He to stay at the wrong state and hence a big loss in target polarization.*

12.10.4 Common Problems

1. The lock-in does not remain stable. Or the lock-in but does not seem to track the resonance.

You may see a big fluctuation in either lock-in signal or resonance frequency. This effect can be caused by several things.

First, it is possible that the frequency to which you are locked is not the true resonance, or you are completely out of resonance region. The solution is again to find manually the resonance, looking for the most pronounced signal.

The problem could also be caused by a wrong lock-in amplifier phase. Please refer to Section 12.10.1.

Finally, it could be that the PI Feedback box is improperly set. Adjust the gains until the lock-in becomes more stable. Admittedly this method is not very quantitative. Based on experience, at high polarization (>40%), both gains should be adjusted anti-clockwisely nearly to the end. At lower polarization (∼20%), both gains should be adjusted by about 4∼5 turns clockwisely. These numbers may also vary at a higher or lower EPR D2 signal amplitude.

You may also optimize the PI circuit gains by observing how fast the circuit follows the resonance. When counter reading is stablized, change Wavetek frequency manually by 0.04 MHz (which is close to the real jump during sweeping, at a target polarization ∼ 40%). If the counter goes back to resonance in roughly 3 5 seconds, then the circuit is working well. If less than 2 seconds and counter reading is not stable, decrease both the relative and absolute gain. If longer than 6 seconds or lose the signal, increase both the relative and absolute gain.

2. The lock-in does not track the resonance when doing AFP flips. This is common, since the frequency shift during the spin flip can be quite large, on the order of 20-40kHz.

   First, it is possible that the PI feedback is not strong enough for the circuit to follow the resonance shift. Try increasing the absolute gain of PI circuit if possible. Second, it could be that the modulation DS 345 amplitude is too small. The size of this amplitude determines how far from the central frequency the circuit looks for the resonance. Try increasing the modulation amplitude (but do not increase too much, usually it is less than 0.8 Vpp). This will cause the counter reading less stable and you need to compromise between stablizing the circuit and following the frequency shift.

12.11 Reference Cell

12.11.1 Description of the Reference Cell System

The reference cell system is comprised of three subsystems—the reference target cell, the gas handling system, and the control electronics. The reference target cell is mounted inside the target enclosure, which is located in the beam path immediately upstream of the spectrometers. The gas handling system consists of a gas manifold, which is located

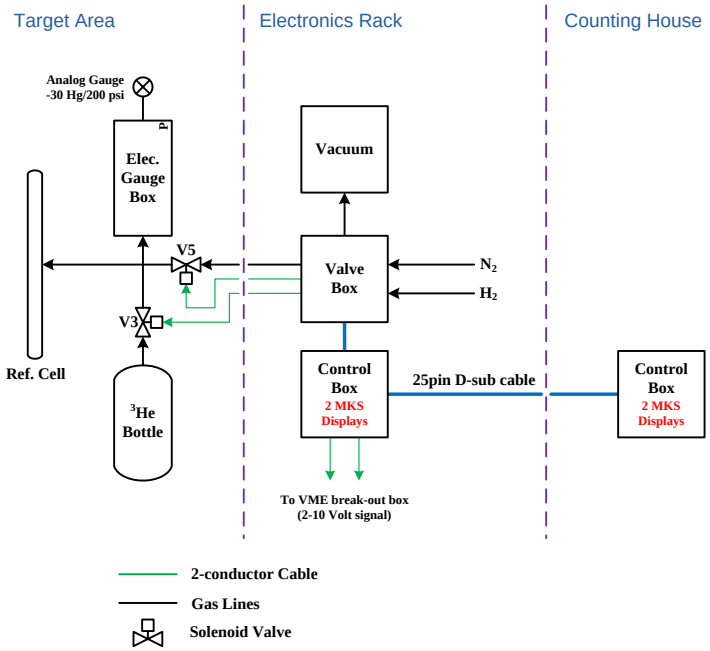

Figure 12.13: Schematic of reference cell system

in the electronics rack near passageway under beam line, and a series of gas lines that connect the manifold to the reference cell. A control box consisting of electronics that control the solenoid valves of the gas system is also located in the electronics rack. A remote control box, identical to the one in the hall, is located in the counting house. A schematic of the entire system is shown in Fig. 12.13. The individual subsystems are depicted in Fig. 12.14–12.15.

Under normal operating conditions, the manifold, the reference cell, and the intervening gas lines will be filled with either H_2, ^{3}He, or N_2 gas at high pressure (typically $\approx$ 10 atm). The system may be operated either locally (at the panel) or remotely (via switches mounted in the counting house). A switch on the remote gas panel itself allows one to toggle between local and remote control. All switches, local and remote, are equipped with LED displays so that one can readily determine the status of any switch.

The reference cell consists of a very thin-walled glass flask. An outlet at the opening is joined to a Copper tube by means of a glass-to-metal seal. This Copper tube is connected to a 1/8" dia. Copper tube with quick-plug-on gas fittings. High pressure ^{3}He gas bottle is mounted near the target chamber and is connected to the other end of the 1/8" Copper tube through solenoid valve **V3**. The rest of the gas system is connected to the 1/8" copper tube by a long 1/2" Copper tube. The reference cell is mounted at the gas fitting. A special coupling tool has been designed to facilitate the coupling/de-coupling the reference cell at the quick-plug-on gas joint.

The gas handling system consists of 7 solenoid-controlled, air-actuated valves, one

Condition	Action	Valves activated (open)
C1	**Evacuate**	V1+V4+V5
C2	**Vent**	V4+V5+V7
C3	**^{3}He fill**	V3
C4	**N_2 fill**	V2+V4+V5
C5	**H_2 fill**	V4+V5+V8

Table 12.6: Action of the remote-control switch panel

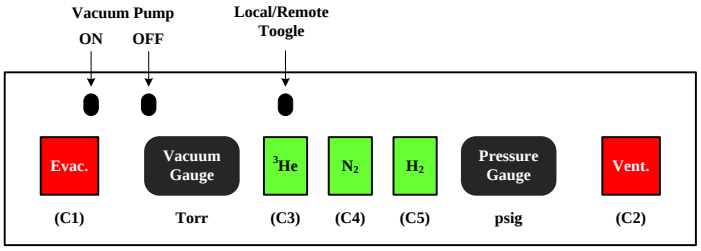

Figure 12.14: Valve configuration of the reference cell gas system

hand-set needle valve, two baratron pressure gauges (0–1000 torr and 0–1000 psia), two pressure relief valves, a bottle of high-pressure ^{3}He gas, a bottle of high pressure N_2 gas, a bottle of high pressure H_2 gas, an oil-free MD pump backed up by a backing pump, and sufficient tubing and pipe fittings to connect them all together. There are 5 basic actions that the gas handling system must accomplish; pump-out, vent, fill with H_2, N_2, or fill with ^{3}He.

The reference cell control panel (shown in Fig. 12.15) is comprised of 5 pushbutton switches, which activate the 5 possible valve setting conditions, a baratron high-pressure gauge which reads between 0-1000 psia, a baratron low-pressure gauge which reads between 0-1000 torr, two toggle switches to turn on and off the vacuum pump and a toggle switch to select local or remote operation. The valve configurations for the five actions are described in Table 12.6.

12.11.2 Operation

The following operational sequences will allow the filling of the reference cell with the three gases:

- Fill with N_2
  - Step 1: Vent to 16 psia.
  - Step 2: Evacuate until vacuum reaches 1 mtorr.

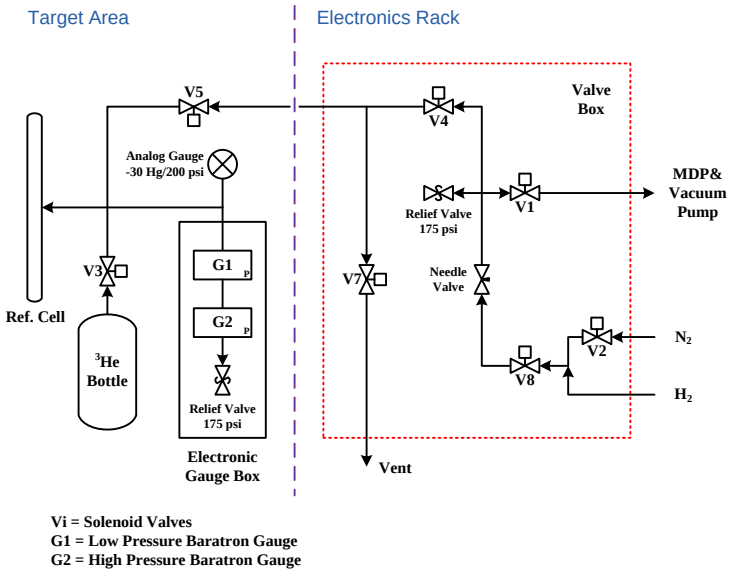

Figure 12.15: Control panel

  - Step 3: Hold the N_2 button down while checking the high-pressure gauge, until the desired pressure is established.
  - Repeat steps 2,and 3 three times.

- Fill with H_2
  - Step 1: Vent to 16 psia.
  - Step 2: Evacuate until vacuum reaches < 10 mtorr.
  - Step 4: Hold the H_2 button down while checking the high-pressure gauge, until the desired pressure is established.
  - Repeat steps 2, and 3 three times.

- Fill with ^{3}He
  - Step 1: Vent to 16 psia.
  - Step 2: Evacuate until vacuum reaches < 1 mtorr.
  - Step 4: Hold the ^{3}He button down while checking the high-pressure gauge, until the desired pressure is established.

The pressure at the location of the gas manifold is measured by a baratron gauge. The baratron pressure is read into the data stream and is also output to a remote sensing unit located in the counting house.

12.11.3 Cautions

1. Be careful with the ^{3}He, we have a limited supply.
2. If the system is above atmospheric pressure, always vent it before pumping.
3. Always monitor the high-pressure gauge when filling. Do not exceed 150 psia.

12.11.4 Potential Hazards

The principal hazards associated with the reference cell are flying material and loud noise if the gas panel or reference cell fails catastrophically under high pressure. Of the two subsystems, the reference cell subsystem presents the greater hazard, both because it is more likely to fail, and because it is likely to be more dangerous if it does. The target enclosure is designed to contain all the debris in case of a cell explosion.

12.11.5 Hazard Mitigation

After testing the reference cell system to 200 psia and to protect the cell from rupturing during normal operation, the relief valves have been set to 175 psia.

All personnel shall wear hearing protection when accessing the platform area while the cell is under high pressure and no windows are on the target enclosure.

Special care must be taken when accessing the region inside the target enclosure. Full face shielding and safety glasses should be worn under these conditions. Before working in the vicinity of any of the reference cell components, personnel shall check the pressure in the manifold from the baratron readout in the remote control area.

12.12 Hazards and Safety Issues

The main potential hazards encountered in the overall operation of the target are listed below. As we address the operation of each subsystem, a description on how to alleviate the potential hazards is reported.

- Personnel eye sight damage due to exposure to infrared laser light;
- Fire due to the operation of the high power lasers;
- Fire due to the operation of the target oven;
- Explosion of the high pressure target cell;
- Explosion of the reference cell;
- Activation of the target caused by the electron beam.

For personnel safety to be effective all personnel authorized to operate any subsystem of the target will be required be familiar with that specific subsystem as well as read this target OSP.

A target operator is on shift usually when the target laser system is on. A training session is required of any target operator.

12.13 Laser Safety

12.13.1 Laser Safety

1. Always have your safety goggles on when the laser is on!
2. When the yellow beacon is flashing, have goggles on when you enter the hut.
3. Alignment should be done at low power.
4. Be sure that the beam is hitting the target.
5. Do not turn the beam up to full power unless the oven temperature is at least 150 degrees Celsius.
6. Do not look directly into the beam even with safety goggles on.
7. Do not stand in the way of a beam that is at full power.
8. Understand where the beam is and where the reflections are.

12.13.2 Fire Hazards and Safety

The fire and safety in the laser room is covered in the LOSP for the laser room, however, in the target area where the laser beam is directed, there is a case where a potential fire hazard exists.

In case the target cell explodes during optical pumping, the temperature sensors mounted on the target and pumping cells will respond immediately and an alarm will be triggered. The alarm will be triggered whenever a temperature reading of any sensor is 10% out of its norminal range. The target operator should shut off all the lasers immediately. Based on the tests performed, the target oven will sustain on the order of 10 minutes with full laser power incident and no rubidium atoms to absorb the laser power.

12.13.3 Personnel Safety/ Working in the Hall

When the installation of the full target setup is finished, working in the hall shall be safe from laser light hazards or target explosion hazards, because laser light as well as the target cell will be safely enclosed. Therefore when considering the overall aspects of the safety of personnel working in the Hall two distinct periods are to be considered.

1. One period is during the laser beam alignment because the laser beam pipes from the laser hut to the target need to be removed. During this time period we will ensure that no other person except those people who are laser trained are in the hall. This will be arranged by using a controlled access to the Hall provided by the CANS system. This alignment will be performed usually during the night time and (or) weekend. Clear warning signs will be posted at the entrances of the Hall when the alignment is under progress.

2. One period is during the setup of the high pressure target cell in its final position, or when replace a target cell, or perform target related work requiring opening the enclosure. In this case the "target platform" which is a natural perimeter around the target area will be marked and signs posted requiring the wearing of ear protection and faceshield. Lasers should be tuned off and fibers be disconnected and locked away following the lock-and-tag procedure. Beyond that defined perimeter all personnel working in the hall will not be affected in case of explosion of the cell if they are not wearing a faceshield. Nevertheless, it is strongly recommended to have ear protection when working anywhere in the Hall.

12.14 Appendix: Laser Standard Operation Procedure

12.14.1 Introduction

A polarized ^{3}He target system was built and used for several JLab experiments. A number of new experiments will continue use the polarized ^{3}He target system in the future. The polarized ^{3}He target is based on the principle of spin exchange between optically pumped vapor of Ru-K mixture and ^{3}He gas. Several high power (30 Watts) 795 nm diode lasers will be used for the optical pumping. A laser room outside the hall is built to house the lasers. This LSOP describes the setup of the laser system in the laser room and at the target area, details the potential hazards associated with the operation of this setup and provides instructions for the safe and effective use of the equipment. In addition, this manual provides information about the functioning of the various safety systems installed to protect personnel and equipment.

12.14.2 Personnel and Required Training

The 30 watts infrared diode lasers (Coherent FAP-System and Newport Comet lasers) may only be operated by personnel who have :

- completed a Laser Safety course administrated by the laser safety officers at Jefferson Laboratory (Bert Manzlak).

- read the Laser Safety section of the EH&S Manual(6410);

- completed and passed an opthalmological exam;
- had a safety walkthrough by the Laser Safety Supervisor of the Polarized ^{3}He Target System (Jian-ping Chen);
- read this document;
- been added to the authorized list of Laser Personnel, included as the last page of this LSOP.

Jefferson Lab personnel or outside visitors, who have not completed all of above training, are only allowed to enter the laser control area under the following conditions :

- have permission of the Laser Safety Supervisor of the Polarized ^{3}He target system
- be accompanied by a laser authorized personnel
- if the laser is operational, with required safety goggles
- if any equipment, including the laser, is operational, no touching of equipment due to electrical hazards.

12.14.3 Laser

The main Laser specifications are outlined in Table 12.14.3 and Table 12.14.3. For more specific information, we refer to the Coherent FAP-system diode laser users manual and the Newport Comet diode laser manual, which will be available in the lab.

12.14.4 Optical setup

The optical setup is shown in Fig. 12.17, and is made of:

- Up to 15 infra-red diode lasers (five for each pumping direction) located on two racks in the laser room;
- Fifteen long (75 m) optical fiber to transport laser beam from the lasers into the hall;
- Three 5-to-1 optical fiber combiners, one for each pumping direction;
- Six lens, two lenses for each laser beam to have it focused at the pumping cell;
- Three beam splitters to split each laser beam to two beams with linear polarization;
- Nine $\lambda/4$ waveplates, six with rotating motors, to transform each beam from linear polarization to right or left circular polarization;
- Twelve dielectric mirrors to reflect each split beam back into the pumping cell;

Specifications	**COHERENT FAP-System**
Operational Specifications	
Output power	30 W
Mechanical Specifications	
Weight	60 pounds
Cooling Requirements	None required
Delivery Optical Fiber Bundle	0.8 mm diameter
Delivery Fiber Length	5.0 meter nom.
Delivery Fiber Termination	SMA 905 conn.
Operational Specifications	
Typical Operating Temperature	0°C to 35°C
Typical Storage Temperature	−20°C to 65°C
Humidity (non-condensing)	5% to 95%
Electrical Specifications	
Input Power	115 Vac 60 Hz, $<$ 1200 W (500 W typical)
Optical Specifications	
Beam Characteristic	Semiconductor, multimode
Beam Divergence	$<$ 0.20 N. A.
Diode Laser Center Wavelength	780 to 840 nm
Wavelength Temp Coefficient	0.27 to 0.30 nm/°C
Emission Bandwidth (FWHM)	±2 nm

Table 12.7: Coherent laser specifications

Specifications	**Newport Comet Diode Laser System**
Operational Specifications	
Output power	30 W
Mechanical Specifications	
Cooling Requirements	None required
Delivery Optical Fiber Bundle	0.4 mm diameter
Delivery Fiber Length	1.0 meter nom.
Delivery Fiber Termination	SMA 905 conn.
Operational Specifications	
Operating Temperature	20°C to 35°C
Storage Temperature	−30°C to 50°C
Operating Humidity	Non-condensing
Electrical Specifications	
Input Power	115 V, 60 Hz, 6 Amp max.
Optical Specifications	
Operating Cionditions	standard CW
Beam Divergence	98% within 0.22 N. A.
Diode Laser Center Wavelength	794.69 nm
Temperature Tuning	0.005 nm/°C
Spectra Width (FWHM)	$\leq$ 0.35 nm

Table 12.8: Comet laser specifications

- Three transparent windows on the oven to allow the combined laser beams to pass through;
- One pumping cell to absorb all the laser beam power;
- One mirror and three optical fibers with lenses for spectral-analyzer and for EPR;
- One spectral-analyzer for monitoring the pumping cell.

For each pumping direction, up to five diode lasers will be used. After passing through the 75 m long fibers, they will be combined to be one beam with a 5-to-1 optical fiber combiner. The combined beam, after passing through two lenses, will be split into two beams. Each one will go through a $\lambda/4$ waveplate to transform linear polarization to circularly right or left polarization. All beams, after passing some windows and being reflected by some mirrors, will shoot into a glass pumping cell filled with mixture of Rb-K vapor and ^{3}He gas. The laser beams will be mostly absorbed by the pumping cell. The total path length from the output of 5-to-1 combiner to the pumping cell is about 5 meters. The pumping cell is inside an oven and connected to a target cell. The whole target assembly is inside three pairs of Helmholtz coils, which provide a magnetic field for the polarization of the target. A NMR system with a set of RF drive coils and a set of separate pickup coils, and an EPR system are used to measure the polarization of the target.

12.14.5 Hazards

The primary beam hazards associated with Class IV lasers consists of eye and skin injuries. The most severe eye injuries are caused by viewing the beam either directly or through specular reflection. At an infra-red wavelength of 795 nm most of the laser light entering the eye is absorbed in the retina. The primary adverse effects from direct or specular viewing are blindness and severe retinal burns. The primary adverse effects from accidental viewing are retinal burns. The retina is most sensitive to radiation of this wavelength, and if the laser energy incident to the eye is too high, it can cause an irreversible retinal burn.

Laser radiation of the intensity associated with Class IV diode lasers can also cause irreversible damage to the skin. The damage caused is either associated with temperature rise of the skin tissue following the absorption of laser energy (skin burns) or with surface reactions resulting from photon interactions at the molecular level (photochemical effect), disrupting the normal functionality of the skin tissue.

The normal Hazard Zone for the 30 Watts FAP system is 78.5 meters for intrabeam and 6.7 meters for fiber-optic output.

12.14.6 Laser environment

The diode lasers and the associated devices will be located in the laser room outside Hall A. The entire laser room is a laser controlled area (see Fig. 12.16).

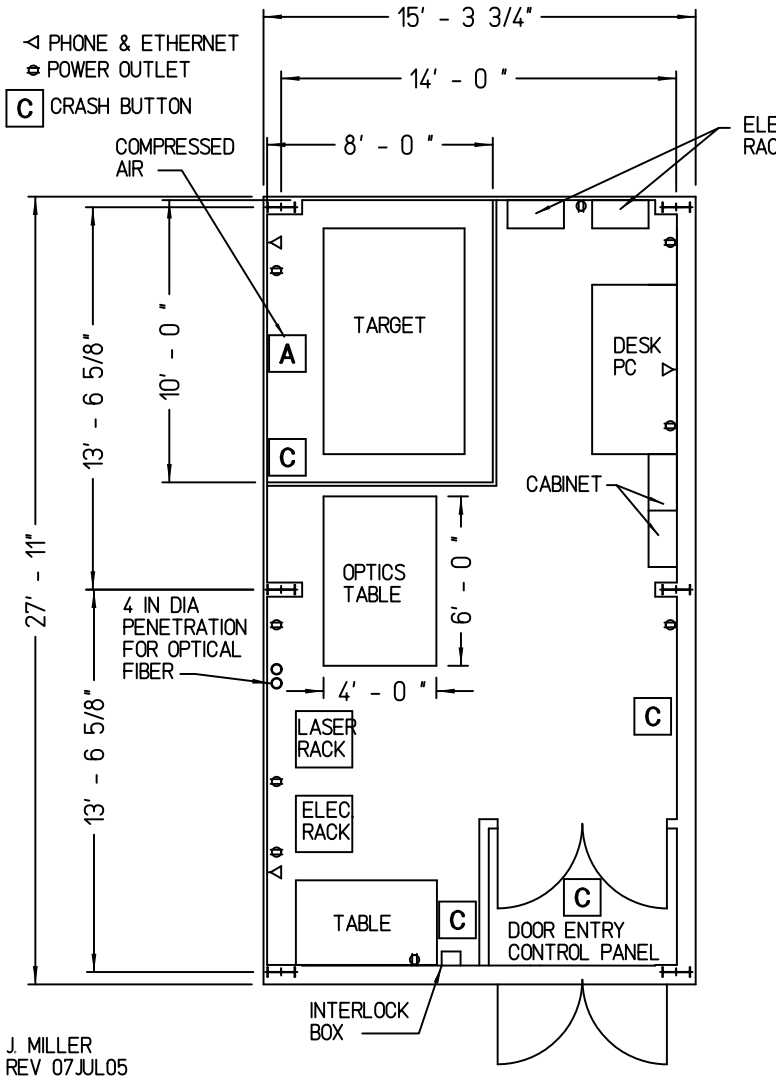

Figure 12.16: The Polarized ^{3}He Target Laser Room Layout

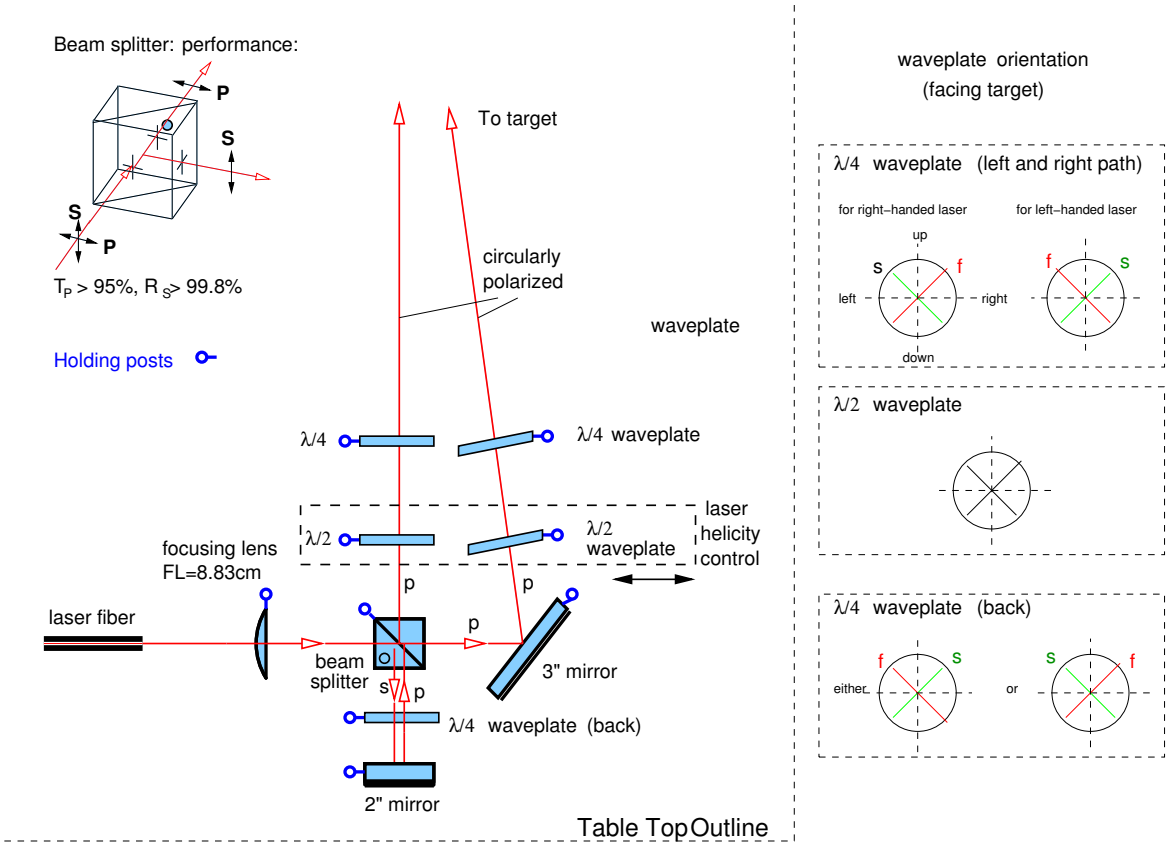

Figure 12.17: The Polarized ^{3}He Target Laser Optics Setup

Laser beams go into the hall via long optical fibers and then combined to form desired polarized lights for optical pumping. The setup is shown in Fig. 12.17. After passing through the optical setup, the laser beams are directed into the pumping cell and terminated there.

Outside the laser room, the laser beam path is completely enclosed with beam pipe between the laser room and the target pivot and an enclosure on top of the the target.

Apart from direct beam hazards to eyes and skin, since the diode lasers are Class IV lasers, there exists a potential fire hazard. Flammable material should not be brought into the laser area.

12.14.7 Procedures

In this section, we review the various procedures that are required to operate the laser and optical devices. Hazards are least likely to occur during normal operation when laser beams are switched on. During tests, maintenance, upgrades and/or alignment, beam hazards are more likely.

At all times, when operating the diode lasers in lasing mode, safety goggles are required.

12.14.7.1 Normal procedure

In the operation mode, each diode laser is in lasing mode rendering an output power of approximately 30 W. The laser beam is already aligned, properly focused and directed into the pumping cell. The lasers are interlocked with the entrance door of the laser hut. All the laser beam pipes and the laser enclosure on top of the target are securely installed.

Working with the lasers in normal operational mode will require protective eye wear with a minimum optical density (OD) of 4.7 at wavelength of 795 nm. Before starting the laser in its normal operation mode personnel have to enable the laser safety interlock box. This will cause access to the laser room to be in a controlled mode. Authorized personnel with an access code can bypass the interlock for 45 seconds when entering the laser room. Unauthorized personnel entering the room will cause the lasers switching to stand-by mode when the door is opened. If the laser is to be unattended for a long time, the power should be switched off.

Thus the general procedures for normal operation of the diode lasers in the target lab are:

- Enable laser safety interlock box;;
- Wear protective eyewear;
- Switch on AC power;
- Turn on the control box with a key;
- Turn laser to Ready and then On.

12.14.7.2 Alignment procedure

All the mechanical stands supporting the optical components have been designed and surveyed in order to achieve a preliminary safe alignment of the entire setup (laser off). Initial setup of laser and optical system will be done while the laser hut window is closed (such that no laser beam will come out the laser hut). Initial alignment will be done with a standard class 3 HeNe laser (class 3A after attenuation, 650 nm) or a laser pointer (class 3A). Laser safety goggles are mandatory for all procedures except for alignment using class 3A HeNe laser. Use precaution for class 3A laser when using the HeNe laser: Do not look directly into the beam or use collecting optics. The final alignment will be done with the diode laser but at a reduced laser power (less than 10 amps, when the laser spot on a card can be clearly seen with IR viewer). The alignment is performed with one laser beam line at a time. The beam can be tracked by the use of either an IR viewing card or an IR viewer. The photosensitive card can be displaced along the beam, and the

IR viewer allows the tracking by the light slightly diffused on the optical components. During this final alignment, the laser hut window will be opened and the laser beam will be directed to the target, while the laser beam pipes and the laser enclosure on top of the target will be taken off. Therefore the whole hall will be classified as laser area. We will use the CANS system to have controlled access. Before the laser alignment starts, a sweep will be performed to clear the Hall. Then the CANS system will be programmed to only allow authorized laser trained persons to have access to the hall. The door to the BSY tunnel will be magnetically locked with a toggle push-button switch. The "laser danger" warning sign will be posted at all the entrances. The doors will be checked by pulling the door handle. In addition, a red flashing light will be put at the BSY side of the door. Most of the final laser alignment will be performed during night time to minimize interference with other work going on in the hall. When the alignment stops, all signs will be take off and the CANS system will be disabled and the door to BSY will be unlocked.

12.14.7.3 Maintenance procedure

Replacement of used or damaged optical components of the setup will be made with the laser off (power switched off and unplugged). The positions and orientations of the new components will be mechanically surveyed and extensively checked before turning to any procedure needing the laser on.

When the target enclosure windows need to be opened (such as to inspect the target or to replace a target cell) and the hall is not in laser controlled access, the lasers must be turned off before opening the target enclosure. The keys for all of the laser power supplies optical fibers will be disconnected and the connection ends will be secured in a lock box. All staff working in the vicinity of the target enclosure must apply personal locks to this box in accordance with JLab lockout/tagout procedures. The vicinity area will be determined from the power measurement and with clear danger sign posted.

In case of the failure of any electromechanical or electrical or electronical device, the lasers and the other power supplies will be turned off. The Laser power can simply be unplugged.

12.14.7.4 Off-normal and emergency procedure

In case of an emergency, power to the laser should be shut off. This can be performed in three ways.

- Push the Crash button;
- Turn off the control key on the laser power supply;
- Pull the plug from the power outlet.

In the event of a fire, the users should leave the laser room and pull the nearest fire alarm. Then leave the hall.

In case anybody is accidentally exposed to the laser beam (direct or indirect) without eye protection, he or she should immediately contact the Jefferson Lab medical center (phone: 7539, page: 584-7539). If it is off business hours, please contact local hospital emergency. At the mean time, please inform the laser system superviser (Jian-ping Chen, phone: 7413, page: 584-7413) and/or laser safety officer (Bert Manzlak, phone: 7556, page: 584-7556).

12.14.8 Controls

Several controls have been added as preventive measures to the laser room and to the direct laser area. We will enumerate these controls here.

1. The laser control area will have danger signs posted and will have a yellow beacon indicating the presence of Class IV diode lasers. Danger sign will also be posted near the target enclosure area.

2. A controlled access interlock system will limit the entrance to the laser room with a coded number pad. The code is given only to the authorized laser users listed in section 10 with currently valid training.

3. The laser switches are interlocked to allow an opening of the door to turn off the laser (to stand-by).

4. The main power plug to the laser can be easily pulled. It is plugged into a power strip with a on/off switch which can be easily switched off.

5. Protective safety goggles (minimum OD 4.7 at 795 nm) have to be worn when the laser is operational.

6. All laser beam paths outside the laser hut are enclosed with beam pipe or other enclosure (except during laser alignment process).

7. All personnel need to fulfill the training requirements as indicated in Section 1 of this document.

8. the LSOP will be posted on the outside door of the laser room to inform personnel about the hazards associated with the setup and the proper procedures.

All controls will be inspected every six months and the inspection will be documented.

12.14.9 Laser safety calculations

1. Maximum Permissible exposure The Coherent FAP-System emit nominal continuous beams of 30 W at a wavelength of 795nm. With a limiting aperture size of 7 mm and exposure time of 10 seconds, the calculated MPE is 1.51mW/cm^2.

2. Optical Density The minimum Optical Density is calculated for the beam diameter of 0.64 mm with maximum CW power of 30 watts (the worst case) to be 4.70. OD of 5 safety goggles for the wavelength of 795 nm were selected to be used in the lab.

   With all 4 lasers, when the beams overlap, the combined beam will have a size larger than 2.75 inches. The power density will be lower than the maximum power density with one laser.

3. Nominal Hazard Zone

   The nominal hazard zone is calculated for 3 conditions:

   (a) intrabeam: 78.5 meters

   (b) after lens: 5 meters

   (c) fiber-optic output: 6.7 meters

   The condition of use will always be fiber-optic output with nominal hazard zone of 6.7 meters.

   The laser hazard zone is nimized by confining operation to an interlocked laboratory or interlocked enclosure.

12.15 List of authorized personnel

The personnel showed in Table 12.9 is authorized to operate the Coherent FAP-system diode lasers and the associated polarized ^{3}He target facility, under the assumptions, they have completed the training requirements defined in Sec. 12.14.2. Names can be added to this list by the Laser System Supervisor.

Other authorized personnel is shown in Tables 12.10, 12.11 and 12.12.

Names can be added to the lists after proper training and authorized by Jian-Ping Chen, phone 7413 and jpchen@jlab.org.

Name (first,last)	Dept.	Call [4]		e-mail	Comment
		Tel	Pager		
Jian-Ping Chen	JLab	7413	584-	jpchen@jlab.org	*Laser system Supervisor*
Ed Folts	JLab	7857		folts@jlab.org	
Gary Dezern	JLab	7119	349-	dezern@jlab.org	
Scot Spiegel	JLab	5900	584-	spiegel@jlab.org	
Mark Stevens	JLab	6383	584-	stevensm@jlab.org	
Todd Averett	CWM	5007		averett@jlab.org	
Gordon Cates	UVA	6932		cates@jlab.org	
Alexandre Deur	UVA	7526	584-	deurpam@jlab.org	
Chiranjib Dutta	Kentucky	OFF		chiran@jlab.org	
Haiyan Gao	Duke	5314		gao@jlab.org	
Ole Hansen	JLab	7627	584-	ole@jlab.org	
Jin Huang	MIT	5923		jinhuang@jlab.org	
Joe Katich	CWM	5332		jkatich@jlab.org	
Wolfgang Korsch	UoK	OFF		korsch@jlab.org	
Nilanga Liyanage	UVA	OFF		nilanga@jlab.org	
Zein-Eddine Meziani	Temple	5282		meziani@jlab.org	
Yi Qiang	Duke	7237	584-	yqiang@jlab.org	
Karl Slifer	Temple	6933		slifer@jlab.org	
Patricia Solvignon	Temple	693		solvigno@jlab.org	
Vince Sulkosky	JLab	5487	584-	vasulk@jlab.org	
Yi Zhang	Lanzhou	OFF		zhangyi@jlab.org	
Xiaohui Zhan	MIT	5362		zhanxh@jlab.org	
Xiaochao Zheng	ANL	5433		xiaochao@jlab.org	

Table 12.9: Polarized ^{3}He target: authorized personnel

Name (first,last)	Dept.	Call [4]		e-mail	Comment
		Tel	Pager		
Jian-Ping Chen	JLab	7413	584-	jpchen@jlab.org	*Laser system Supervisor*
Ed Folts	JLab	7857		folts@jlab.org	
Gary Dezern	JLab	7119	349-	dezern@jlab.org	
Scot Spiegel	JLab	5900	584-	spiegel@jlab.org	
Mark Stevens	JLab	6383	584-	stevensm@jlab.org	
Todd Averett	CWM	5007		averett@jlab.org	
Gordon Cates	UVA	6932		cates@jlab.org	
Alexandre Deur	UVA	7526	584-	deurpam@jlab.org	
Chiranjib Dutta	Kentucky	OFF		chiran@jlab.org	
Haiyan Gao	Duke	5314		gao@jlab.org	
Ole Hansen	JLab	7627	584-	ole@jlab.org	
Jin Huang	MIT	5923		jinhuang@jlab.org	
Joe Katich	CWM	5332		jkatich@jlab.org	
Wolfgang Korsch	UoK	OFF		korsch@jlab.org	
Nilanga Liyanage	UVA	OFF		nilanga@jlab.org	
Kathy McCormick	Rutgers			mccormic@jlab.org	
Zein-Eddine Meziani	Temple	5282		meziani@jlab.org	
Yi Qiang	Duke	7237	584-	yqiang@jlab.org	
Karl Slifer	Temple	6933		slifer@jlab.org	
Patricia Solvignon	Temple	693		solvigno@jlab.org	
Vince Sulkosky	JLab	5487	584-	vasulk@jlab.org	
Yi Zhang	Lanzhou	OFF		zhangyi@jlab.org	
Xiaohui Zhan	MIT	5362		zhanxh@jlab.org	
Xiaochao Zheng	ANL	5433		xiaochao@jlab.org	

Table 12.10: Polarized ^{3}He target: laser trained personnel

Name (first,last)	Dept.	Call [4]		e-mail	Comment
		Tel	Pager		
Jian-Ping Chen	JLab	7413	584-	jpchen@jlab.org	*Contact*
Chiranjib Dutta	Kentucky	OFF		chiran@jlab.org	
Jin Huang	MIT	5923		jinhuang@jlab.org	
Joe Katich	CWM	5332		jkatich@jlab.org	
Yi Qiang	Duke	7237	584-	yqiang@jlab.org	
Vince Sulkosky	JLab	5487	584-	vasulk@jlab.org	
Yi Zhang	Lanzhou	OFF		zhangyi@jlab.org	

Table 12.11: Polarized ^{3}He target: personnel authorized to change target cells

Name (first,last)	Dept.	Call [4]		e-mail	Comment
		Tel	Pager		
Jian-Ping Chen	JLab	7413	584-	jpchen@jlab.org	*Contact*
Chiranjib Dutta	Kentucky	OFF		chiran@jlab.org	
Jin Huang	MIT	5923		jinhuang@jlab.org	
Joe Katich	CWM	5332		jkatich@jlab.org	
Wolfgang Korsch	UoK	OFF		korsch@jlab.org	
Yi Qiang	Duke	7237	584-	yqiang@jlab.org	
Patricia Solvignon	Temple	693		solvigno@jlab.org	
Vince Sulkosky	JLab	5487	584-	vasulk@jlab.org	
Yi Zhang	Lanzhou	OFF		zhangyi@jlab.org	
Xiaochao Zheng	ANL	5433		xiaochao@jlab.org	

Table 12.12: Polarized ^{3}He target: personnel authorized to perform laser alignment

Chapter 13

The Waterfall Target [1] [2]

13.1 Overview

The waterfall target system provides a target for experiments on ^{16}O. Using a waterfall for oxygen experiments has many advantages. Pure oxygen is difficult to handle, as it is highly reactive. The use of other oxygen compounds requires additional measurements to subtract the non-oxygen background, whereas the hydrogen in water can be used for calibration purposes. The technique of using continuously flowing water as an electron scattering target was first developed in 1982 in Mainz [27]. The conceptual design of the waterfall target system for Hall A developed by INFN Roma, is very similar to one used at Saclay [28], with the parameters as follows: ~ 120 mg/cm^2 one-foil thickness, target thickness stable in time within 1%, and insensitive to beam current up to at least 20 μA. The target may be configured for one or multiple waterfall "foils".

13.2 Description of the System

The main components of the target system (see Fig. 13.1 and Fig. 13.2) are:

a) the waterfall target cell, the target, the solid target ladder;
b) the hydraulic system;
c) the movement system;
d) the slow-control system;

[1] *CVS revision* Id: waterfall-target.tex,v 1.7 2003/12/17 03:59:49 gen Exp

[2] Authors: David Meekins meekins@jlab.org and Maurizio Lucentini lucentin@jlab.org. This file is a combination of two files taken from: http://www.jlab.org/~meekins/h20_target/safety_doc/, Operation_manual.lyx and waterfall_safety.lyx. The original documents are available: http://www.jlab.org/~meekins/h20_target/safety_doc/Operation_manual.ps and http://www.jlab.org/~meekins/h20_target/safety_doc/waterfall_safety.ps The file has been formatted by J.LeRose lerose@jlab.org and E.Chudakov gen@jlab.org

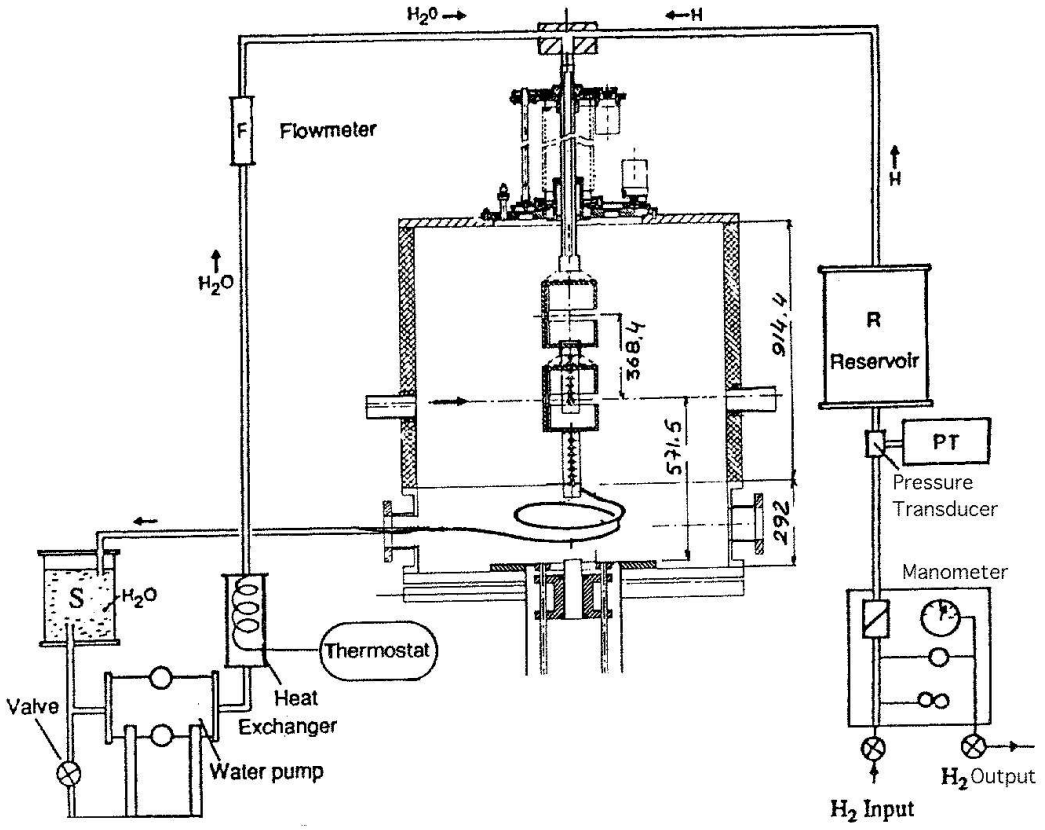

Figure 13.1: Schematic overview of the target system with the hydraulic system on the left side, scattering chamber, movement system and target cell in the middle. The hydrogen system on the right side is not implemented in the present setup.

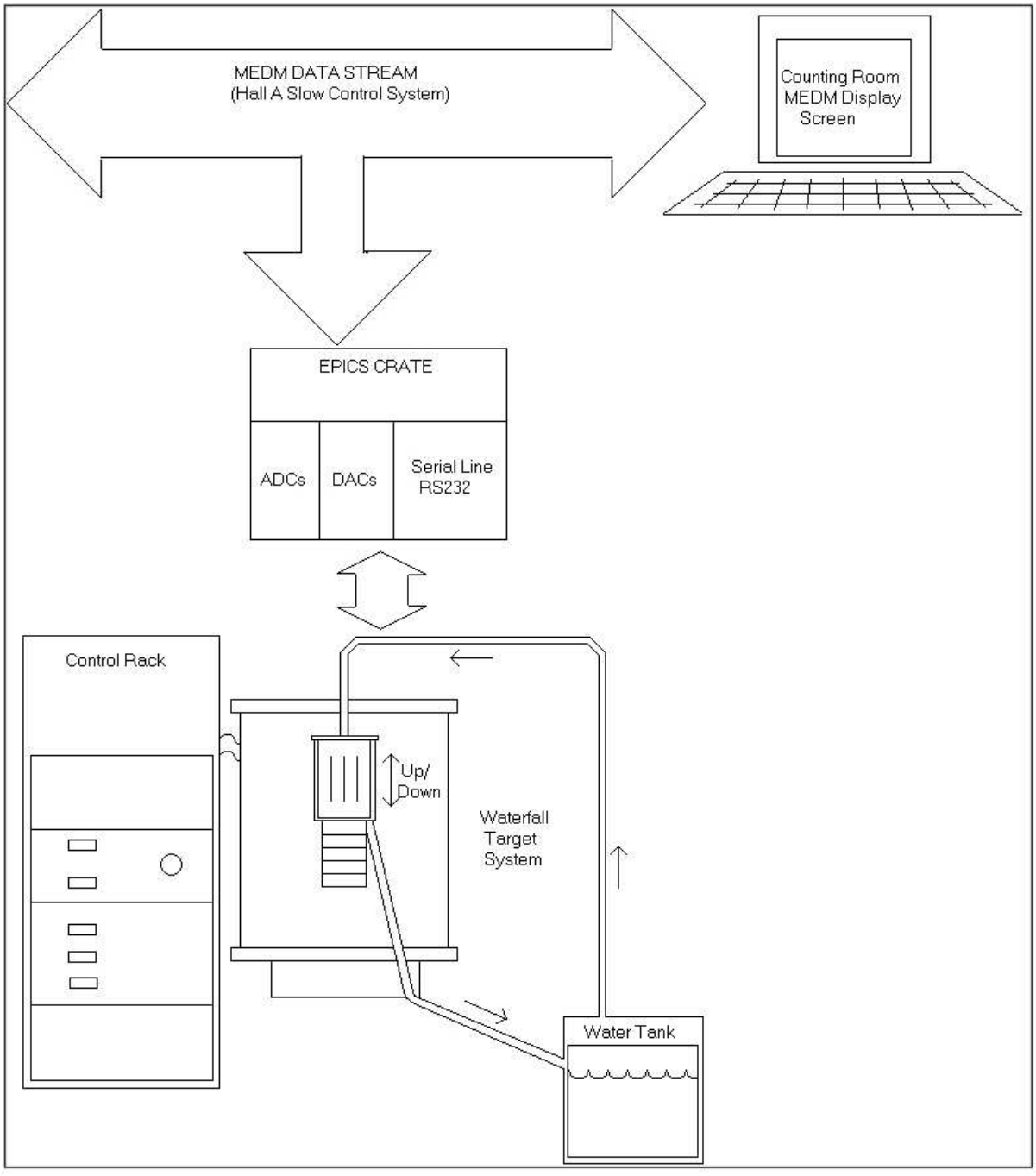

Figure 13.2: Scheme of the target system devices

The waterfall foil(s) is (are) produced in a cell mounted in the standard scattering chamber (Fig. 13.3 and 13.4) of Hall A. The water, continuously pumped from a reservoir (S), goes into the target cell and then back into the reservoir. The water passes through a system of slits and holes to form one or more flat rectangular films, which are stable due to the surface tension and to the adherence to stainless steel poles (Fig. 13.5).Under the cell, a target holder allows one to put up to 5 solid targets cooled by the water (Fig. 13.6).

The waterfall target can consist of a single foil or multiple foils, according to the needs of the particular experiment. Notice that it is possible to modulate, slightly, the thickness of the waterfall target by changing the pump speed. This adds flexibility to the system and allows the user to choose the best value according to the desired resolution and luminosity.

Elastic scattering from hydrogen in the target is used to measure the target thickness. For continuous monitoring of the target thickness, one 'calibrates' the raw counting rate of either spectrometer by the elastic scattering measurement. It is then possible to convert the electron or hadron rate observed during the measurement to an average target thickness.

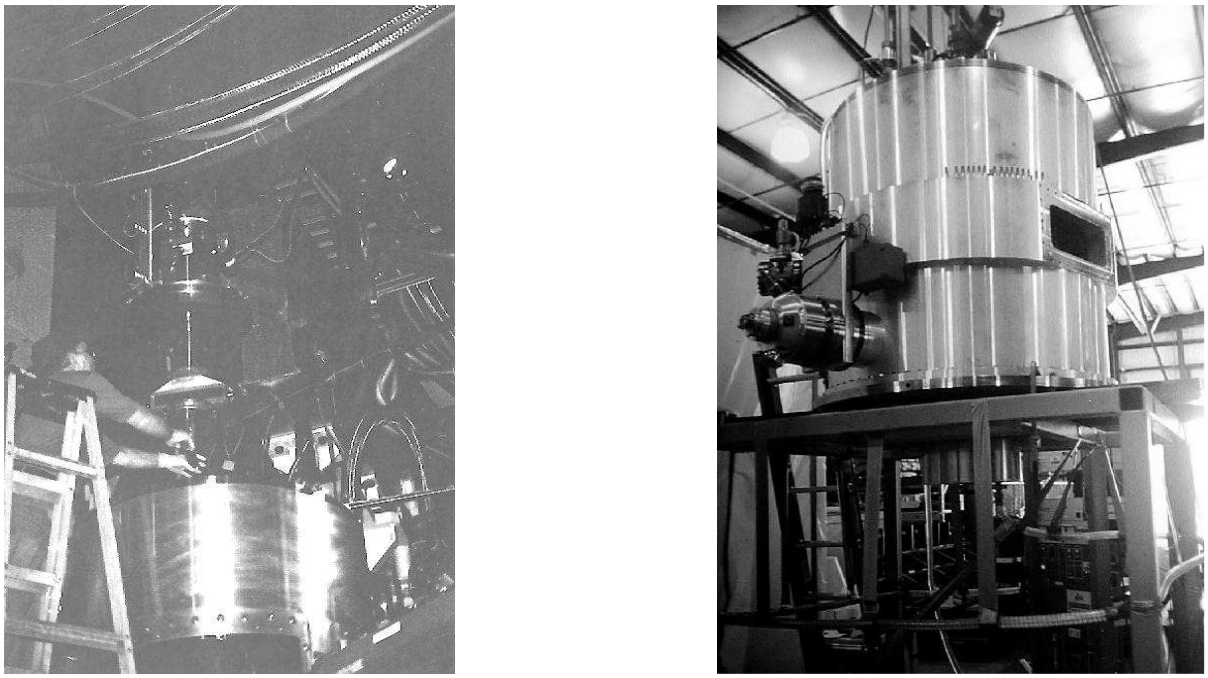

Figure 13.3: Pictures of the target and scattering chamber.

13.2.1 The Hydraulic System

The hydraulic system comprises of a closed circuit (Fig. 13.7) containing a pump which forces the water from a stainless steel container up to the target manifold and back to

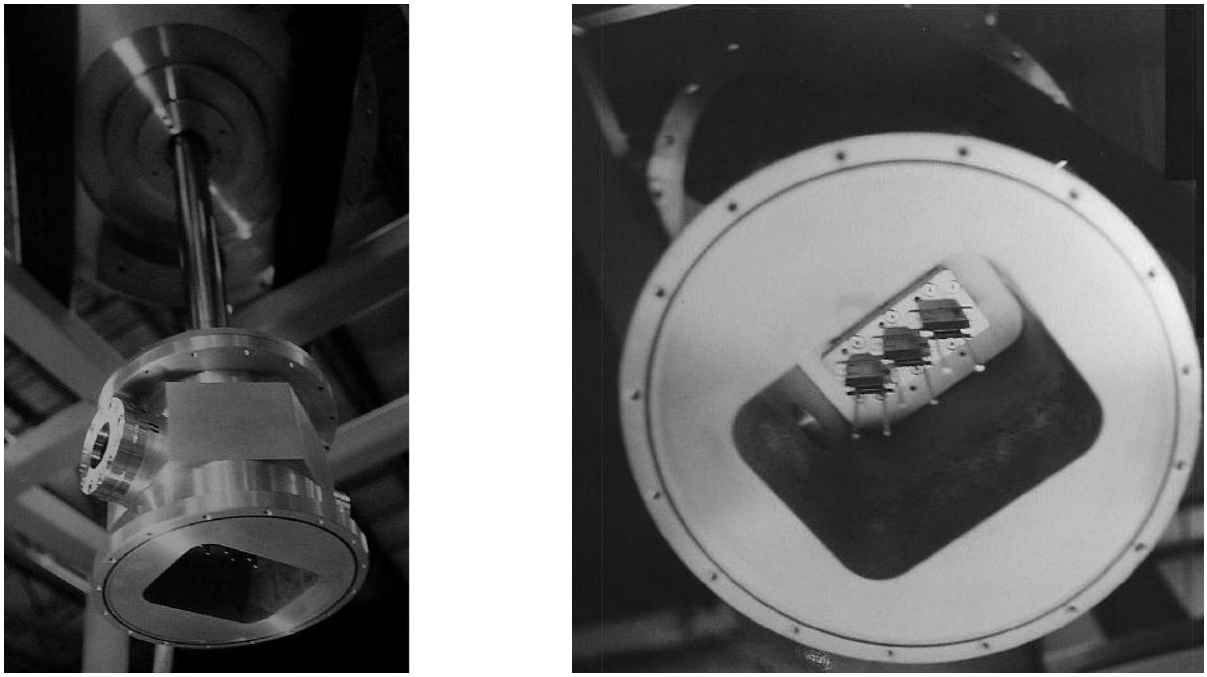

Figure 13.4: The enclosure of the target used for E00-102 and E94-107 is shown on the left. The waterfall target within the enclosur is shown on the right.

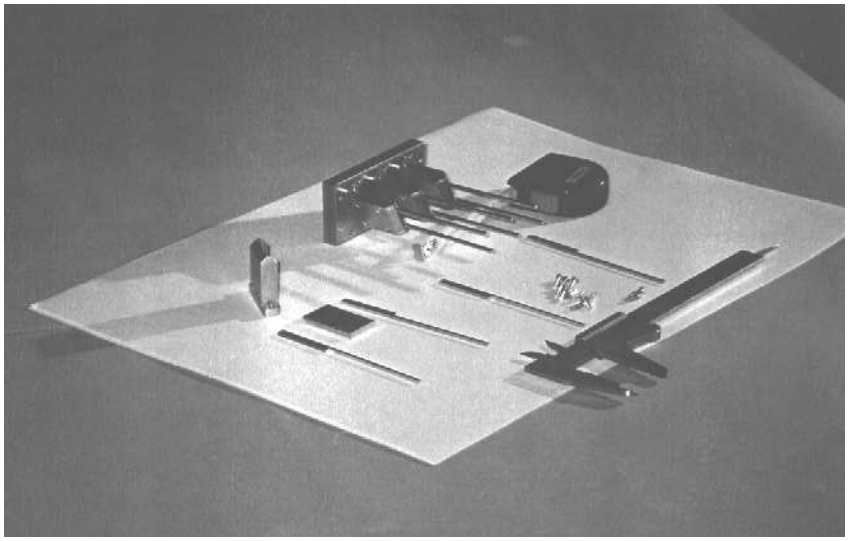

Figure 13.5: Mechanical details of the waterfall target: posts etc.

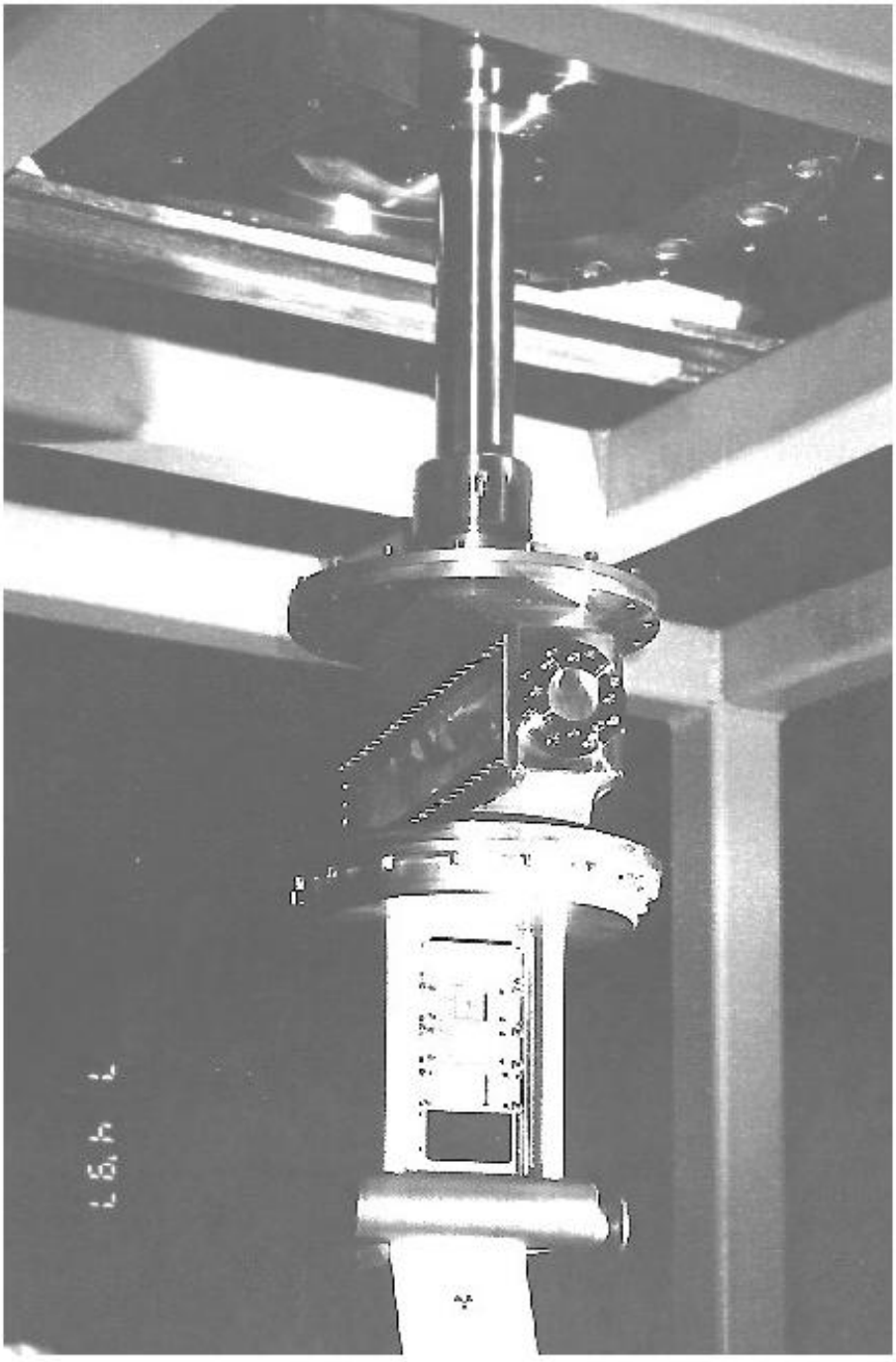

Figure 13.6: The Waterfall Target Stack, the waterfall cell with solid targets mounted beneath.

the container by means of stainless steel tubes. A gear pump, magnetically coupled to a dc motor, is used to produce a stable film.

There is a provision to place a cooler along the circuit to keep the water at constant temperature. Moreover, hydrogen can be introduced into the target container to reduce the background. In the present setup, neither of these provisions have been implemented.

A tachometer on the pump axis measures the pump speed (RPM) and a flowmeter, just before the entrance of the scattering chamber, measures the flow rate. The command voltage value is also read. By continuously measuring these parameters, and comparing them, one can monitor the target thickness stability.

Basically, the water flows in a closed loop; there is a magnetic gear pump, capable of 40 liters/min, 0-90 V DC voltage controlled, which pulls the water in a stainless steel tube, from the rack up to the target cell, at a distance of about 20 metres. Before arriving in the cell, the water flows through a flowmeter. A display shows the flux in front of the rack.

When the water arrives at the target cell, it passes through a small compression chamber, which has three rectangular holes at its bottom. Three waterfalls are formed. Finally, the water falls down the cell where an output stainless steel tube goes back to the tank[3]. When the pump is off, the water nearly fills the tank. When the pump is on, the water level must be sufficient to let the pump pull water, and not air. The pump speed is read by a tachometer, which consists of an optical counter-timer which counts the turns of the pump axis, and sends this value to a display in front of the rack and to the computer by a 4-20 mA standard loop.

The pump has a driver located on top front of the rack, which allows the user to drive it manually, or from a remote position using the computer. A manual switch on the front of the driver selects the operating mode. If manual mode is set, the knob close to the switch can be turned in order to increase/decrease the pump speed. The value of the pump speed represents the percentage of maximum reachable pump speed (see Operating Procedure). The pump speed regulator is also available in the Counting Room. The pump cannot be switched off by computer.

A short list of the instruments used in this systems is listed below:

Device	Model
Flowmeter probe	
Flowmeter transducer and transmitter	NA
Flowmeter display	ITECO trading mod. 9210001 out 4-20 mA
Tachometer	ITECO trading mod. 9210001 out 4-20 mA
Water pump	Pacific Scientific mod. 6324-452
Pump driver	Dart Controls mod.253G 200E + PCM23
Tubes	Swagelock tubes (various sizes)
Tube Connectors	Swagelock tube connectors

[3]The tank is a parallelepipedal volume of about 20 liters made of stainless steel with a front perspex window, which can be seen in front of the rack, to see the inner water level.

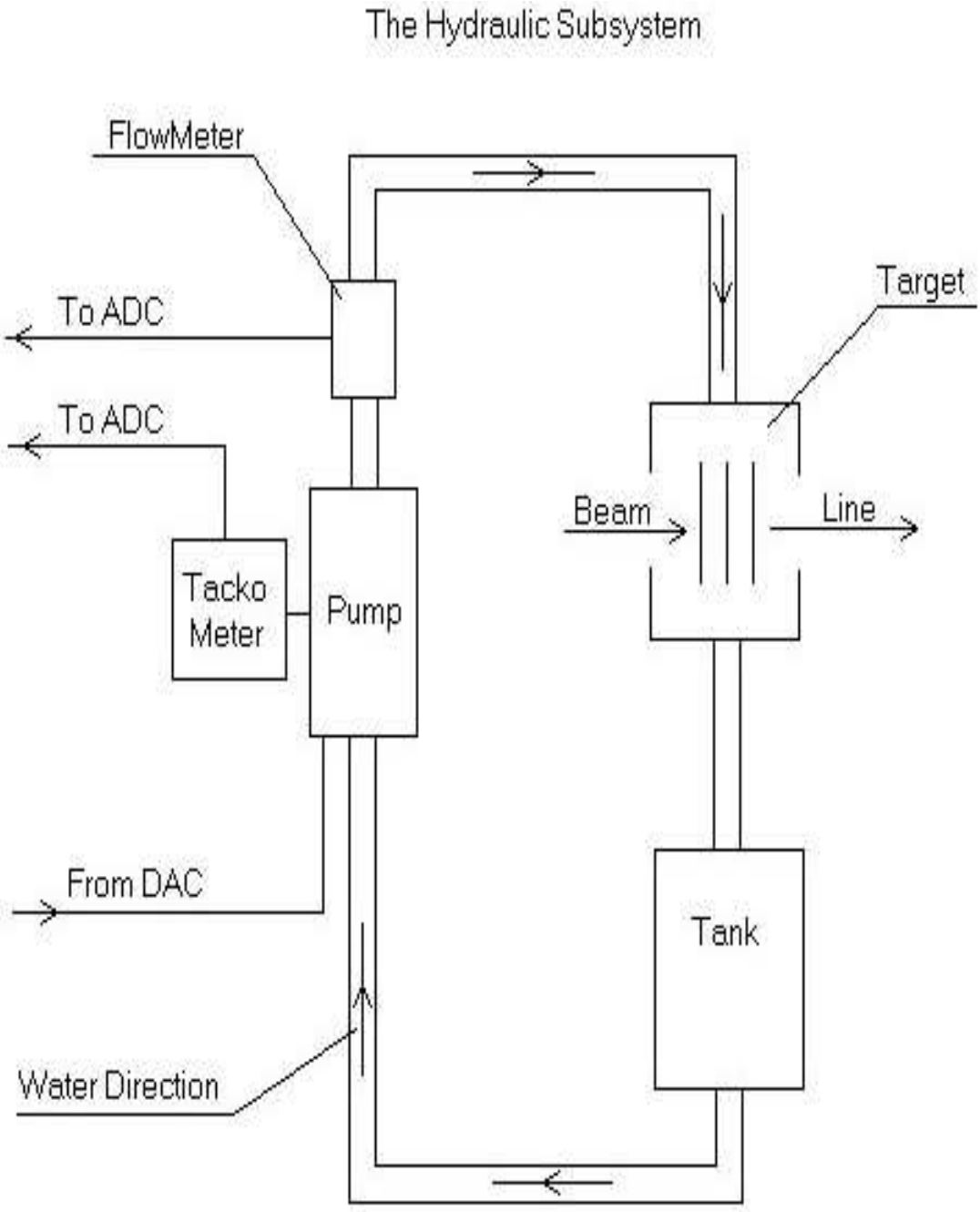

Figure 13.7: Schematic view of the hydraulic system.

13.2.2 The Movement System

The movement system allows the vertical translation of the waterfall target and the solid target ladder. The total mass of the system is about 50 kg. A picture of it can be seen in Fig. 13.8. The movement is done using a stepping motor connected to a driver module. The driver module is put in a separate chassis and it can operate locally in manual mode, by pressing the UP/DOWN preset switch and the STOP/GO switch, both located on the front panel of this chassis, or in remote mode, from the counting room by computer (see Waterfall target EPICS MEDM display)[4] (see Fig. 13.11). Microswitches serves two purposes:

- 1) switch off the beam while the system is moving;
- 2) stop the motor if either the top or bottom position is reached.

There are two low voltage heavy duty electro-mechanical microswitches at the extreme positions (high and low limit). If the target approaches one of these extreme positions then the corresponding microswitch changes its status and the logical signal is used to stop the movement.

The movement system has been carefully shielded and grounded to reduce noise from the driver and its power supply. The motor driver and the power supplies are placed in a separate chassis, close to the EPICS crate, containing the ADC, DAC and serial driver module. A magnetic positional encoder monitors the vertical position of the targets. The encoder output is a $4 - 20$ mA signal and it is converted into a pure number proportional to the target position and is displayed on the PC panel. The restore procedure has to be performed manually, in Hall A, due to the serious risk of damaging the system (see Operating Procedure). The level signal on the microswitches is a 24 V DC voltage, supplied from the Hall A system. A short list of the instruments used in this systems is given below:

Device	Model
Stepping Motor	Phytron ZSS100-200
Encoders	ASM SENSORS
Chassis	custom made
Power Supply unit	custom made
Motor Driver	SHS - APS 3/A
Controller	Serial RS232, via EPICS

13.2.3 The Slow–Control System

All controls and monitoring are handled by the slow control system (see Fig. 13.9). The data acquisition is performed using EPICS [14], the standard control system at JLab. The EPICS crate (Fig. 13.10) contains ADC, DAC modules, and a serial line to interface

[4]For EPICS and MEDM see the references [14,18]

Figure 13.8: Picture of the movement system.

with the motor driver. The control equipment is mounted in a rack (see Fig. 13.12). The user interface (GUI) (Fig. 13.11) is based on MEDM [18][5][6]

The components of the system are given below:

- Slow controls

  List of components:

- CONTROLS:
  - pump + driver + analog interface to EPICS
  - stepping motor + driver + serial interface to EPICS
- SENSORS:
  - optical tachometer
  - flowmeter
  - position magnetic encoder
- OTHER SIGNALS:
  - microswitches
- CONTROL LINES:
  - 4-20 mA for tachometer and flowmeter, encoder
  - 0-5 V DC for I/V converting board to ADC in EPICS crate
  - 0-5 V DC for pump command, from DAC in EPICS crate
  - 12 V DC voltage for microswitches
  - serial RS232 for motor driver to EPICS interface

All of the analog signals coming from the transducers are to be read by the ADC module, in the EPICS crate. For this reason, they are grouped in a single cable, coming out of the rack, and connected to the the ADC patch panel. These are slow signals: tachometer [arbitrary units], flowmeter[l/min], position encoder [arbitrary unit], and do

[5] The software is maintained by David Wetherholt wether@jlab.org of the accelerator controls group.

[6] Software location: mccops/medm/hla (monticello), MEDM application ha_wt_stepmot.adl;
Epics: r3132j0; Application: ha_waterfall (Current version: 1-1);
IOC: iochawt1;
ha_waterfallhawt1 : Contains 32 ADC channel readbacks, motor records and D/A pump controls;
adcchan - Standard template for VMI3122 ADC Channels.
hawf_ll : Low-level code for RS232 communication and high-level subroutines calls for sequencer code to communicate with the Star2000 stepped motor.
seq_hawf: Sequencer code for stepped motor movement.

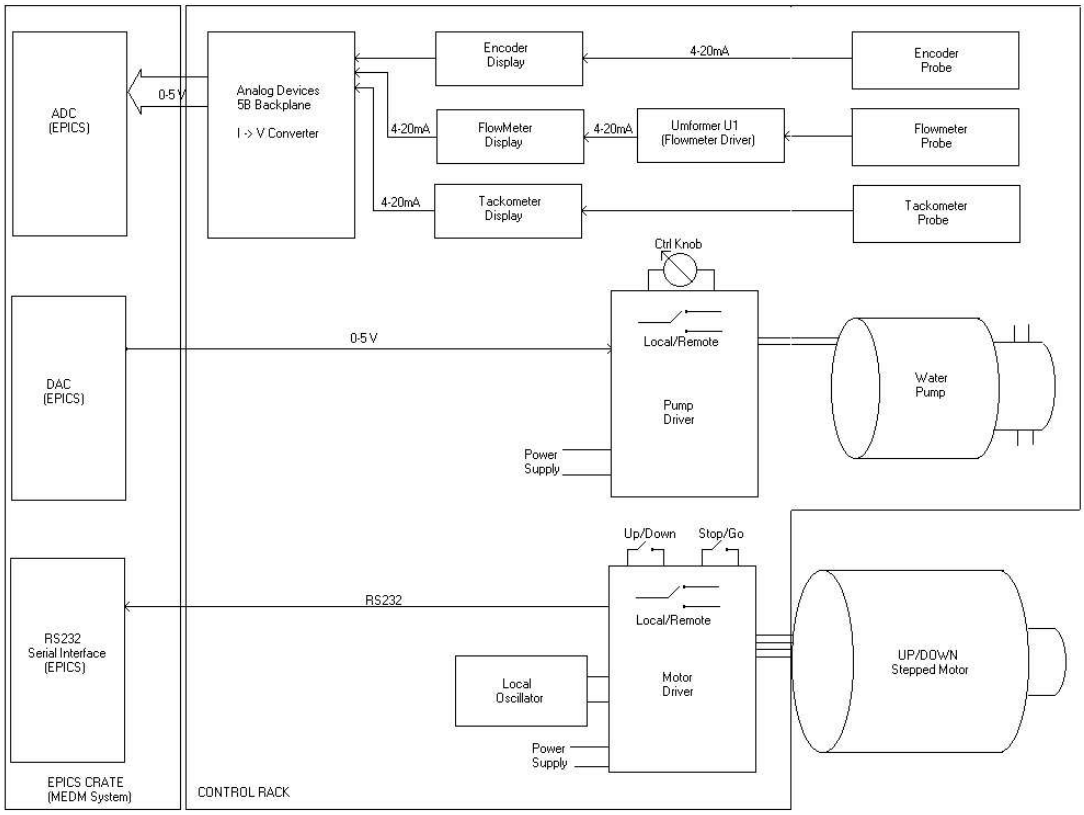

Figure 13.9: Waterfall target: slow control system layout.

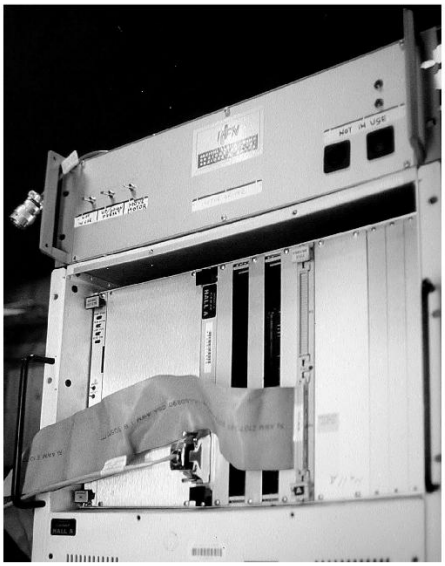

Figure 13.10: Waterfall target: the EPICS Crate.

not need a fast acquisition rate. The transducers, as indicated above, all have 4-20 mA current output, for better noise immunity. The transducers are located in the rack and send their signal to a current-to-voltage converting board, located on the back side of the rack. This is called 5B Backplane, and contains 5B32 modules, which are insulated current input and 4-20 mA to 0-5 V converters. Conversion to voltage is necessary, to let the signals be acquired by the ADC of the MEDM system. The pump command is a 0-5 V signal coming from the DAC module in the EPICS crate.

The software control of the target is written in EPICS and run on the IOC iochawt1. The IOC uses serial communication, DAC and ADC to control the target. The pump motor tachometer, flowmeter, position encoder, and home switch are read through the ADC card. It is common to have noise on the flowmeter, tachometer, and encoder. The user should expect this noise and not be alarmed. The user should check the camera on the control rack to make sure that the postion encoder does indicate the proper target (there is some acceptable slop on this number).

The motion control is achieved via a SHS - APS 3/A stepper motor controller. Communication with this controller is achieved through a RS232 serial connection. This controller counts absolute steps from the home postion. The home postion is defined using the HOME routine on the expert page of the GUI. Non-Experts are forbidden to use this function as serious down time may result. If the target motion mechanism does not seem to be moving to the selected target, execution of the HOME routine might be needed and an expert must be called.

The pump speed control is achieved through a -5 - 5V DAC. The DAC is 12 bit and

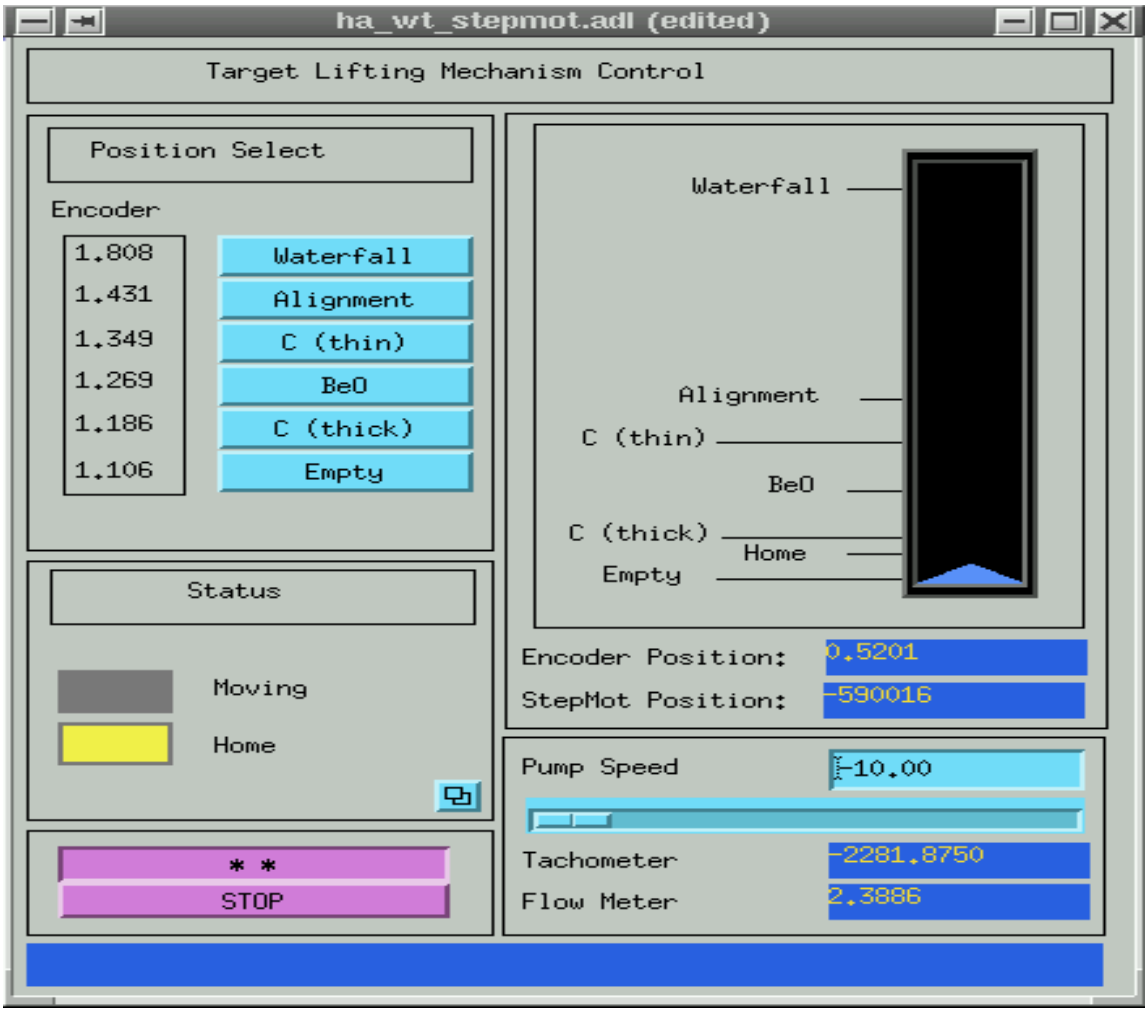

Figure 13.11: Waterfall target control GUI..

Figure 13.12: Waterfall target: control rack.

negative voltages are not used in the application. Therefore the minimum set postion for the pump speed is 2048. This corresponds to 0V and 0 pump speed (pump is off). A setting of 4095 corresponds to 5 volts and maximum pump speed. It is not possible to set the pump speed outside these limits in software.

A counter readout (ITECO trading mod. 9210001) provides the tachometer signal. The signal output from the module is 4-20 mA which is converted to 0-5V and connected to the ADC. There is significant noise on the ADC channel which seems to be a feature of the ADC. The user should expect this noise and not be alarmed at oscillating values for the tachometer signal.

The same counter readout is used for the flowmeter. The device is read using the same ADC and thus, the signal has a similar level of noise. The user should expect this noise and not be alarmed at oscillating values for the flowmeter signal.

The postion encoder is the same type used on the collimators for both arms. The encoder is displayed using a simple digital display on the control rack. This display unit has a 4-20 mA output that is converted to 0-5V and connected to the ADC. Again, the ADC value has significant noise. The user should expect this noise and not be alarmed at oscillating values for the encoder signal.

13.3 The Target Cell Windows

A crucial component of the target is the cell window. Because it is intended to employ beam current exceeding 50 μA, care must be taken in choosing the window material, which otherwise could melt from overheating. Consider the general case of a circular beam spot and a circular target window, as illustrated in Fig. 13.13. There is a continuous heat sink surrounding the window which is maintained at temperature T_0 and located at a distance r_0 from the center of the beam spot. The beam spot radius is r_1. The temperature pattern which develops is characterized by two distinct regions. In the logarithmic one the temperature is given by

$$\Delta T_1 = T_1 - T_0 = \frac{i\rho}{2\pi\kappa}\frac{dE}{dx}ln(\frac{r_0}{r_1}) \tag{13.1}$$

while, in the linear region, the temperature is given by

$$\Delta T_2 = T_2 - T_0 = \frac{i\rho}{4\pi\kappa}\frac{dE}{dx} \tag{13.2}$$

In both cases, i is the beam current (in mA, ρ is the window material density, κ is the thermal conductivity and $\frac{dE}{dx}$ is the differential energy loss). The total temperature rise above the surrounding heat sink temperature T_0 is thus

$$\Delta T = \Delta T_1 + \Delta T_2 = \frac{i\rho}{4\pi\kappa}\frac{dE}{dx}[1 + 2ln(\frac{r_0}{r_1})] \tag{13.3}$$

If a 100 μA beam of radius 25 μm and a window of radius 3 cm are considered (*very* extreme situation), these are the results for various materials:

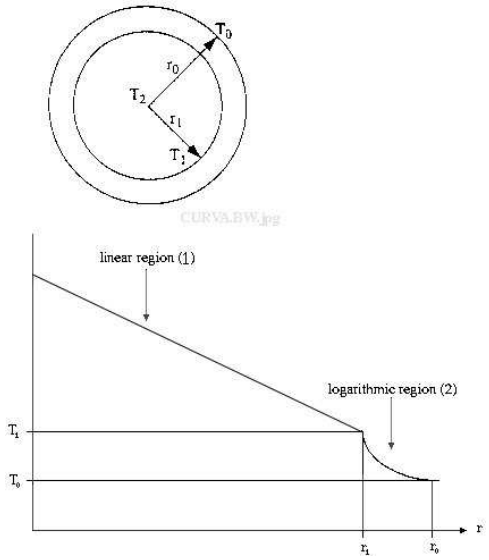

Figure 13.13: Heat behavior of the beam entrance window.

Material	ρ $(\frac{g}{cm^2})$	$\frac{dE}{dx}$ $(\frac{MeV}{\frac{g}{cm^2}})$	κ $(\frac{MeV^0C}{\mu A})$	T_{melt} (°C)	ΔT (°C)
Al	2.7	1.62	2.37	660	223
Fe	7.9	1.48	0.8	1530	1765
Ti	4.5	1.51	0.22	1660	3731
Cu	8.96	1.44	4.0	1083	390
Be	1.85	1.61	2.1	1278	171
W	19.3	1.16	1.75	3410	1545
Ta	16.65	1.2	0.58	2996	4161

It is clear from the table that Be is the most suitable choice for the entrance and exit windows. The window thicknesses vary for the different targets used.

13.4 Target Layouts

Three targets have been built:

- a) the first one for the experiments E89-003 and E89-033 has got three foils;
- b) the second one for the experiment E00-102 also has got three foils but with some modifications;
- c) The third one for the experiment E94-107 has a single foil;

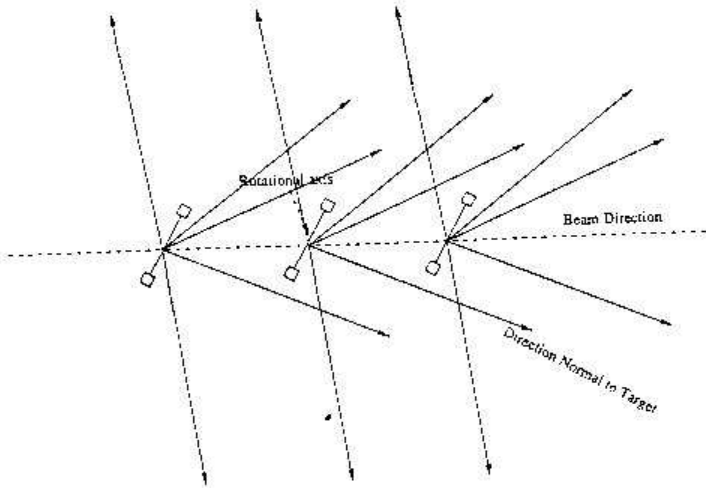

Figure 13.14: Preferential scattering angles for E89-003 and E89-033.

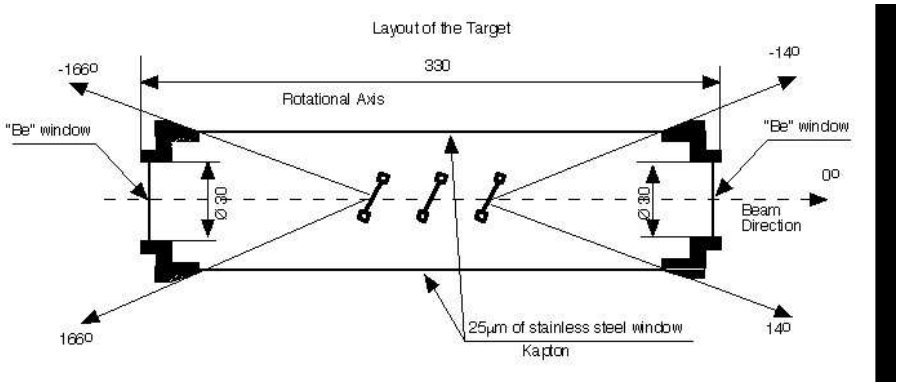

Figure 13.15: A cutaway of the waterfall target cell used in E89-003 and E89-033.

13.4.1 The Target for the Experiment E89-003 and E89-033

Care was taken to optimize the foil configuration with respect to the spectrometer acceptance and ejectile trajectory. A kinematical overview of the target can be seen in Fig. 13.14, a cutaway of the target in Fig.13.15. The three foils are identical, 12 mm wide, and guided by poles which are 2 mm x 2 mm (Fig. 13.5). In the direction normal to the target, the foils are separated by 22 mm. Along the target, the first foil is shifted down the page by 13 mm and second up the page by 13 mm. The foils are parallel, and the angle between the beam direction and the direction normal to the target is 30^0. The machining tolerance is less than 0.15 mm.

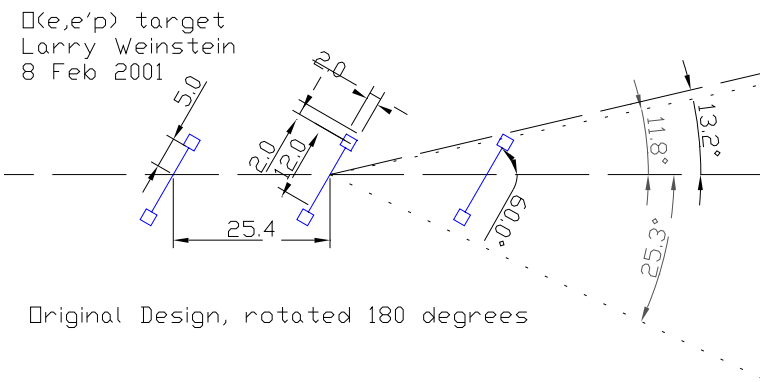

Figure 13.16: Preferential scattering angle of the target for the E00-102 experiment.

13.4.2 The Target for the Experiment E00-102

This target has been modified for the experiment 00-102 to accommodate the new kinematics (Fig. 13.16). The concept is the same, the geometry is slightly different, both for the target and for the container.The Be window thickness is 200 μm.

13.4.3 The Target for the Experiment 94-107

The E94-107 collaboration, in consultation with Hall A, has decided to use a single foil one. The choice is driven by ease of construction, minimization of software reconstruction for extended targets and improved PID which is realized with the RICH. The missing mass resolution is not significantly affected by this choice. The thickness of the Be window has been increased (150 μm) because of the bigger diameter of the downstream window.

13.5 Operating Procedure

There are two main points of operation, when using the system: the first, to position the appropriate target in front of the beam, by moving the target up or down, and the second one is, to control the water pump. Both these operations can be done by using the GUI (see Sec.13.2.3) (see Fig.13.11)accessable from the standard Hall A controls screen. User operation of the target is achieved through this GUI only. Any problems with the target must be addressed by an expert. A list of experts is give in Table 13.3. The experts may perform some operations manually.

The target consits of a positioning system that places one of 5 targets (plus empty) on beam line and a water pump which circulates the target fluid for the waterfall target. Under normal operations, the pump should circulate $\sim$ 3 l/min. A list of targets and maximum allowed currents is given in Table 13.1.

Target	Max Current Unrastered	Max Current Rastered
H_2O	140 μA	0
Al alignment	0	0
^{12}C (thin)	10 μA	50 μA
BeO	10 μA	50 μA
^{12}C (thick)	10 μA	50 μA
Empty	-	-

Table 13.1: Target positions and maximum beam currents for the Hall A Waterfall Target stack. For increases in these current limits contact the Hall A run coordinator.

As it has been mentioned in Sec.13.2.3, it is common to have noise on the ADC reading out the flowmeter, tachometer, and encoder. The user should expect this noise and not be alarmed. The user operator should compare the displays on the GUI (Fig.13.11) with the displays visible in the camera focused on the control rack. In particular, one should make sure that the postion encoder does indicate the proper target (there is some acceptable slop on this number).

13.5.1 Startup of the system

The startup and shutdown procedures require access to the equipment inside Hall A.

13.5.1.1 First startup of the System

Before remote operation of the system can be used, the system must be configured correctly. To do this, one has to perform the following procedure with the waterfall control hardware (inside Hall A):

- Set the pump manual/remote switch to “manual” position; also make sure the pump speed knob, in front of the rack, is set to zero.
- Go to the motor chassis module and set B1 microswitch, there indicated, to the “manual” position (that is the “off” position for the switch).
- Go to the slow control rack, and turn the main 110 V switch to “ON”.
- Turn the pump control to on, and gently turn the pump speed knob clockwise. Check the water circuit operation:
  - If they are off, switch on the displays (FLOWMETER, TACHOMETER), and check for proper operation.
  - If everything working correctly the pump control should be set to the ”remote” position.

- Check the positioning system:
  - Switch the motor driver to “manual” mode.
  - Go to the motor driver chassis and move the motor up and down by pressing the switches on the front panel.
  - Check that the motor is moving and make sure that the encoder display is on, and working during the motor movement.
- If all components are operating correctly the system may be configured for remote operation:
  - Turn the main 110 V switch to “OFF”, in front of the slow control rack.
  - Settle the microswitch, on the back of the motor module, to “ON” (that is remote control position.)
  - Switch the 110V power supply to “ON”.
  - Check the remote operation of the system in the counting room. The procedure for remote operation is given in Sec 13.6.

13.5.2 System shutdown

To shutdown the system one must take the following steps:

- In Counting Room, set the pump speed to zero, and be sure the flowmeter and tachometer indicate zero on their displays
- Then go down to Hall A, turn the pump knob to zero and switch it off.
- Finally, switch off the whole system by turning off the main 110VAC switch, in front of the Rack.

13.5.3 Troubleshooting

- Emergency: Use of the system when the motor is broken
  First of all, there is a spare motor in the shelf, ask the Hall A maintenance technicians for details.
  If for any reason, the motor can not be used, it is possible that movement can be performed by using the crank, which is on top of the target. To do this the crank must be put on the motor seat, and the movement can be performed manually. If the encoder is working, one can use the above table to positionsfor the targets, if the encoder is unavailable, the microswitches put on top of the chamber will give the correct alignment.
  This procedure can be performed ONLY BY AUTHORIZED PERSONNEL, due to the large vacuum load on the system and risk of possible free fall when the motor is removed.

- Emergency: Use of the restore system, when motor has reached some extreme position microswitch.
  Due to the possibility of permanent damage to the system, this can be done ONLY BY AUTHORIZED PERSONNEL.
  When a limit position is reached, an automatic control turns off the power supply for the whole slow control system. In this case, a switch is put in Hall A, near the slow control rack, which bypasses this emergency stop and lets the operator move the motor in the correct direction, bringing the system back to a more central position. This has to be done manually, and visually checking the motor behavior, because of the risk of damaging the target motion mechanism. Finally, when done, the moving system has to be put back to the remote position, and it has to be checked if this works well, or not. Fix the trouble (a spare motor driver is in the shelf, if needed), and normal work can begin again.

13.6 Standard Operations

These operations include moving the target ladder in order to install the target needed and the water-pump control. They should be performed using the GUI (Fig. 13.11).

13.6.1 Target Selection

The target postion is selected on the left side of the GUI under Position Select. There are six options. The desired target is selected by clicking on the particular target button. Basically, this takes a present position and places it in the "set position" input box. A specific position can also be entered directly into this box. If the target is not already on the desired postion, the user should see the "moving" LED turn yellow in the Status display. The graphic display to the right of the selection boxes should update; the blue diamond indicating the current postion of the target. In addition, the "Encoder Postion" and "StepMot Postion" displays to the right of the GUI should update indicating the target is in motion. If the motor hits a limit switch, the motion will stop and the "Limits" status will indicate which limit is active.

NOTE: the motor can be stopped at anytime by pushing the purple button labeled "STOP".

If the motion does not appear to be operating correctly, call an expert. At the end of the motion sequence the encoder postion should be close to the value in text next to the target button. The value on the camera should be within ± 0.0030 on the encoder readout. If this is not the case call an expert.

Note that any target motion will trip and FSD. The MCC should be informed of all target motion. If for some reason during the target motion there is a need to stop, click on the stop button. Motion can be restarted by selecting another target.

There is an access from the "Status" section to an expert screen. Only experts should use the functions on this screen there are no user features here.

In addition to the camera on the control rack, there is a camera on top of the pivot focused on the motion mechanism. The target postions and names are labled in a visible fashion. The user should double check this camera as well to make sure the motion mechanism is behaving as expected.

Finally, there are micro-switches that provide an FSD signal when not on a target. If for some reason an FSD is still tripped after a move to a new target, an expert should be called.

13.6.2 Pump Speed Control

The pump speed control is set using the slider bar or input field in the "Pump Speed" section. This input may range from 2048 to 4096 corresponding to a 12 bit DAC 0-5V output. The output of the DAC is converted to 4-20 mA and used to control the pump speed. An input of 2048 (0V) will stop the pump. An output of 4095 (5V) sets the pump speed at $\sim$ 1800 on the display which is roughly 6 l/min. This should be more than adequate for normal operations. If the pump does not function properly or more flow is desired, an expert must be called. The tachometer and flowmeter displays should always be checked with the displays on the camera.

13.6.3 Rebooting the IOC

The name of the IOC is iochawt1. The IOC may be rebooted by logging into the IOC via telnet and typing reboot. If this is not possible, (i.e. the IOC is not responding to remote login) call an expert.

13.7 Troubleshooting (Experts only)

This section is intended as a reference for experts only. Figure 13.12 shows the control rack. Figure 13.17 shows the IOC rack.

13.7.1 Manual motion operation (Experts only)

Ensure that the motor controller power is off. The power may be turned off at the front of the main control rack under the beam line. In the motor control rack located next to the IOC, there is a small chassis mounted box. At the back of the box, there is a DIP switch clearly marked with black pen labled B1. This switch must be set to OFF to put the controller in manual mode. Restore power from the control rack under the beam line. Return to the motor control box. If the green LED at the right of the box turns on, all is well and the target can be moved up or down by setting the direction switch and toggling the move switch. To restore the remote operation of the system cut power at the main control rack under the beam line. Return the B1 DIP switch to ON and restore power to the system. At this point the controller does not "know" where it is.

Figure 13.17: IOC rack for waterfall target.

The HOME routine must now be run. See Section 13.7.2 for proper use of the HOME routine.

13.7.2 Use of the HOME routine

Use of the HOME routine can be effected from them the main control GUI. In the "Status" section of the GUI, there is a small button that brings up the expert page. Be sure that the physical position of the target is a few centimeters above the H2O target. This can be seen at the top of the scattering chamber. The HOME routine will not properly execute from the H2O target postion. The target might have to be moved manually above the H2O target postion (see Section 13.7.1). Press the HOME button. The target should move in the direction of the HOME switch which is located near the empty target position. If the target does not move in the correct direction, move the target manually to some position close the the BeO target position. This may take some time. The motor controller will look for the HOME switch by moving the system up. When the HOME switch is activated, the target will start moving down; when it finds the HOME switch again it will stop. This ensures that the HOME position is not affected by the hysteresis in the switch.

13.7.3 Hardware limit over travel

If a limit switch (either upper or lower) is tripped, the target motion control system will lose power. This is designed so that the lifting mechanism will not be damaged. In this case, the limit must be bypassed and the target moved off of the limit manually. First, the controller must be set to manual mode. See Section 13.7.1. At the front of the box, there is a switch labled bypass power. Turn this switch down; the yellow LED above should turn on. Also on the front of the box is limit switch bypass button. Press this button and move the target manually. BE SURE TO MOVE IN THE CORRECT DIRECTION; severe damage to the system may result from improper use of this feature. If the motor does not seem to be moving, page Dave Meekins or Scot Spiegel. As the power has been cycled to this module, it is now necessary to run the home routine (see Section 13.7.2). Disable bypass power when finnished with motor reset.

13.7.4 Manual water pump operation

Operation of the water pump in the manual mode is simple. There is a switch at the front of the main control rack (located under the beam line) that can be toggled to remote or manual operation. The pump power switch must be on for the pump to work. The pump speed is controlled via the knob which can be rotated clockwise for more speed. Please do not run the pump faster than 2000 as shown on the tachometer display. This causes undue strain on the system.

13.8 Safety Assessments

The water fall target system is much more simple than the standard target configuration for Hall A. There are therfore fewer hazards which need to be addressed. The target does use the standard Hall A scattering chamber for experiment E00-102. The safety hazards for the scatting chamber have been addressed in the standard Hall A safety documentation (see Chapter. 7 and Sec.11.3.2.3). The following subsections outline the potential hazards and how each must be addressed.

13.8.1 Radiological hazards

Due to the large beam currents required for the referenced experiments, the potential for radiological contamination of the target fluid and scattering chamber area exists. Therefore, all personnel entering the target area after beam has been impinging on the target must follow standard radiological control procedures. Prior to entry into the area the Radiation Control Group must be consulted. The system must only be accessed by authorized personnel

13.8.2 The electrical power and slow control systems

The system is supplied by 110 V AC voltage. All the lines at these voltages are kept inside the rack, and the plugs satisfy the European CE rules for these voltages. The supplies for the single diagnostic and control devices are inside the rack are all at 5 V DC, 12 V DC, 24 V DC. The pump requires 110 V DC. The Motor Driver needs a special 80 V DC voltage. A custom power supply unit has been built for this purpose, and this unit is kept in the so called "Power Supply Unit" at the top of the rack, together with the other supply units.

The signal lines are low voltage (no higher than 12 V DC the digital lines, 0-5 V or 4-20 mA loops) and kept separated from the supply lines by using different connectors and separated cables. Isolated input lines have been used for the analog lines. A potential hazard outside of the rack, are the motor cables, which may be handled only by AUTHORIZED PERSONNEL and with the motor power supply switched off. An 80 V DC/2A (square wave, duty cycle 0,5) current flows in these cables when the motors are in standby mode. This current reaches up to 7 A (square wave, duty cycle 0,5) when motors are moving. These high power lines are kept separated from the low voltage lines in all cases. The pump power supply line is kept inside the rack, and in a position that cannot be reached unless the side panel of the rack is opened.

Access to the rack is controlled by appropriate signage indicating the hazard and list of personnel authorized access.

13.8.3 The water system

There are about 17 liters of pure water in the circuit. The water tank, the tubes, the target and the cell containing the target fluid are made of stainless steel. Connections

between individual parts of the system have been made with "swagelok" connectors. The system has been leak checked with gas up to 2 bars. No water leakage is expected except in case of breaking of the windows of the target cell. In this case, some water carrying some radioactivity may leak into the scattering chamber (which is a contained environment). The calculations performed by Geoff Stapleton show that the radiological precautions necessary are rather low. The water should not be released into the hall drains. Measurements at convenient intervals will be made by the radiation control group on samples to permit determinations of the radionuclide yields. In the case of water loss or the need to drain the water, the radiation control group has to be informed to permit precautionary measurements and controls. Appropriate sinage on the water system indicates this.

13.8.4 Thin windows on the target cell

The beam passes through two windows, which are made of Be (203 μm thickness). It has been calculated (using the FNL-1380 Thin Window Vacuum Vessel Guide from Fermilab) that the Be windows will have a safety factor of 3 beyond the 1/2 yield requirement listed in the Fermilab document. It has therefore been concluded that the windows are adequate for use on this target cell.

The two scattering windows are made of kapton except for experiment E00-102 where the scattering windows are made from 25 μm thick stainless steel shim stock (SST 302; Hardness: 40-45 RC; Tensile Strength: 185000 psi). Three of these scattering windows have been hydro-tested and in each case the window did not fail until slightly above 3 times over pressure (50 psig or higher). A summary of the test results is shown in Table 13.2. It is important to note that the windows only have a 1 atm load on them when the scattering chamber is under vacuum. In this case, the windows are not accessable and present no hazard to personnel.

13.8.5 The slow control system

Due to the low voltages and little currents, there are no significant hazards in working on the small signals; however, one must switch the power off to the whole system before beginning to operate on it. ONLY AUTHORIZED PERSONNEL may touch the signal lines using appropriate lockout tagout procedures.

13.8.6 The mechanical system

There are no hazards in handling the system when it is not in motion. When the system is in motion one has to beware of the cog-wheels movements, and keep hands and loose clothing away from the moving parts. For this reason, it is FORBIDDEN to touch the system when it is in motion. Additionally, the potential exists for remote operation of the motion mechanism while it is being serviced. Therefore, to service the system while it is installed, the appropriate lockout tagout procedures are necessary. Signage stating this will be posted on the motion mechanism upon installation in the hall.

Pressure (psig)	Deflection Window 1	Deflection Widow 2	Deflection Window 3
0	0	0	0
5	53	69	55
10	71	85	72
15	82	93	82
20	94	111	93
25	104	117	103
30	113	128	113
35	124	136	122
40	135	141	128
45	143	150	-
50	Failed	160	-
55	-	Failed	Failed

Table 13.2: Summary of thin scattering window hydro-tests. Deflections are given in (in×1000). The scattering windows are made from 25 μm thick stainless steel shim stock (SST 302; Hardness: 40-45 RC; Tensile Strength: 185000 psi).

13.9 Authorized Personnel

Name (first,last)	Dept.	Call [4]		e-mail	Comment
		Tel	Pager		
Physicists					
Dave Meekins	JLab	5434	449-	meekins@jlab.org	*Target Group*
Maurizio Lucentini	INFN	OFF		lucentin@jlab.org	
Hall A Technicians					
Ed Folts	JLab	7857		folts@jlab.org	
Scot Spiegel	JLab	5900	584-	spiegel@jlab.org	
Mark Stevens	JLab	6383	584-	stevensm@jlab.org	
Gary Dezern	JLab	7119	349-	dezern@jlab.org	

Table 13.3: Waterfall target: authorized personnel

Part IV

Magnetic Spectrometers

Chapter 14

Hall A Vacuum System [1] [2]

14.1 Overview

The Hall A vacuum system consists of 5 separate but interconnected subsystems. The largest is designed to supply the Hall A HRS (see Chapter 15) with a self contained 5×10^{-6} Torr vacuum that enables both spectrometers to be pumped down from atm. in a few hours. The target vacuum system is designed to maintain a 1×10^{-6} Torr in order to minimize contamination and provide an insulating vacuum for the cryo target. Rough insulating vacuum for the 4 superconducting magnets is provided by a 360 cfm Roots type blower that can be connected to each magnet. The beam line vacuum is maintained by 1 ℓ/s ion pump system used in the accelerator ring and a small turbo pump located near the target. The final subsystem is a differential pumping station located near the target exit port.

14.2 HRS Vacuum System

The HRS vacuum system is shown in Figure 14.1. Vacuum for the HRS is supplied by an Alcatel 880 ℓ/s Turbo pump backed by a Balzers 360 cfm Roots type Blower. This Blower, via a special manifold, also supplies the roughing vacuum to the HRS at the Dipole Inlet Transition. The first Turbo is mounted on the lower side of the Dipole entrance transition. The roughing port is also located on this transition, on the top side. The upper turbo is located on the lower side of the window transition.

Vacuum readouts and interlock outputs are supplied by five (5) HPS series 421 Cold Cathode gauges and seven (7) series 275 Mini-Convectron gauges. In addition to these there will also be a FIsons Micromass 386 RGA head installed in the system for diagnostic purposes. Most of this instrumentation will be located on the Turbo pump manifold (for detailed information see Figure 14.1).

Powered valves, instrumentation and pumps will be controlled and powered at the

[1] *CVS revision* Id: vacuum.tex,v 1.4 2005/04/04 22:27:25 gen Exp

[2] Authors: J.LeRose lerose@jlab.org

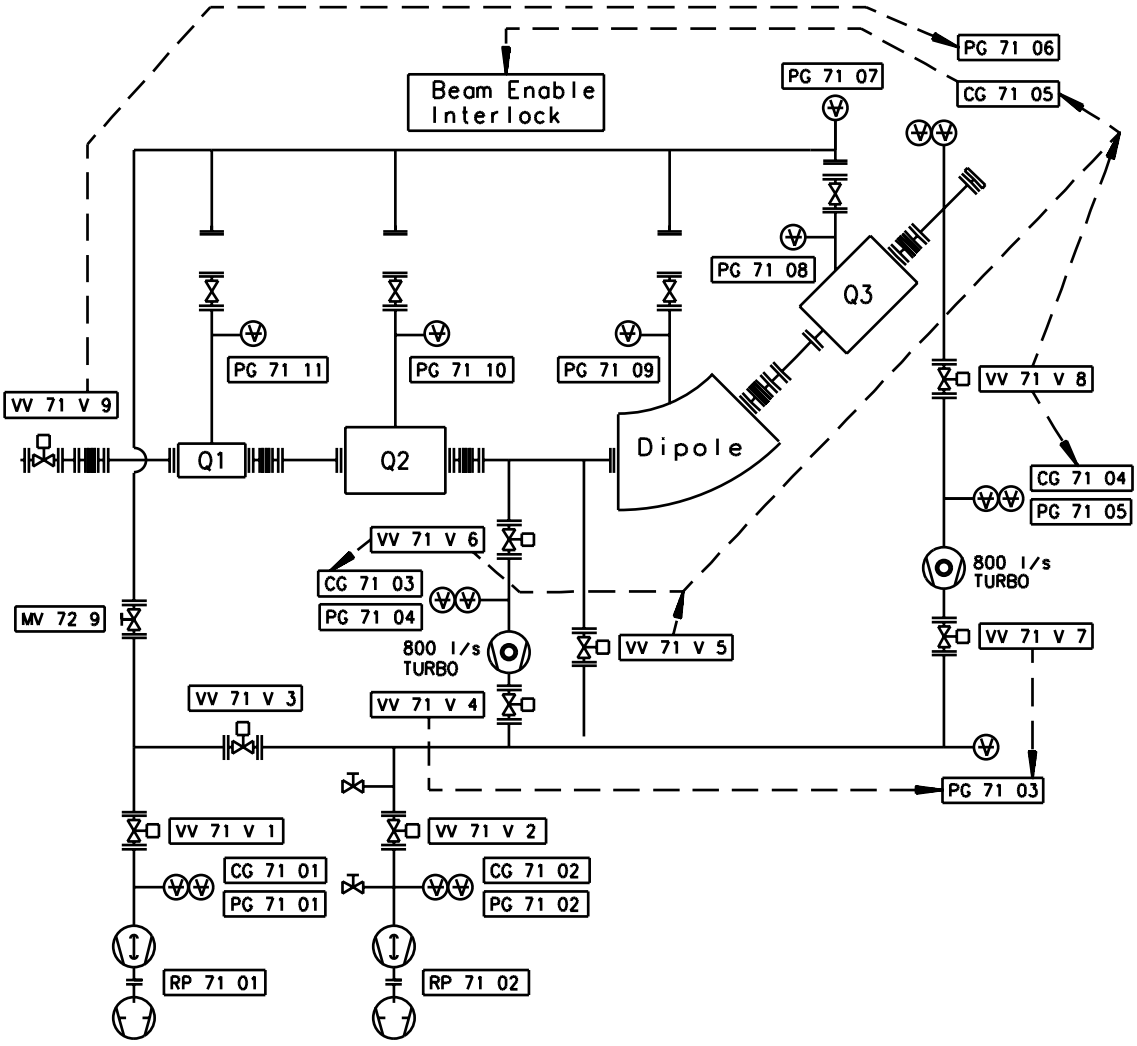

Figure 14.1: HRS vacuum system.

Vacuum System equipment rack located on each respective spectrometer on the gantry platform. Selective equipment will also be controllable from the Hall A counting house.

Chamber

The HRS vacuum chamber consists of an associated vacuum window, a sieve slit and Q1 transition, Q1 to Q2 transition, Spool section, Dipole transition, Dipole to Q3 transition, and the Q3 to exit window assembly. The spectrometer vacuum is contained by a 0.007 inch kapton window at the entrance and a 0.004 inch titanium window at the exit.

14.3 Target Vacuum System

Vacuum for the target chamber is supplied by an Alcatell 880 ℓ/s Turbo pump backed by an Alcatell 21 cfm 2 stage vane pump. The Turbo is mounted on the lower ring of the Target Chamber to one side so as not to interfere with the Target Chamber windows.

The same instrumentation is used here as on the spectrometer.

Powered valves, instrumentation and pumps will be controlled and powered at the Vacuum System equipment rack located on the access Balcony. Selective equipment will also be controllable from the Hall A counting house.

14.4 Magnet Vacuum System

Vacuum for the magnet insulating vacuum is provided by the Cryo pumping effects of each individual magnet.

All controls for the Magnets are manual as we expect no problem after initial pump down.

The insulating vacuum for each magnet is self contained within the magnet.

14.5 Beam Line Vacuum System

Vacuum for the entrance beam line is supplied by 65 ℓ/s Balzers turbo pumps, the first of which is located on the E P chamber, and the second located 3 m upstream of the target chamber. Both turbos are equipped with a HPS 7 Series 275 mini Convectron gauge and a HPS series 421 Cold Cathode gauge located near the balcony.

Vacuum readouts and relay outputs for interlocks are supplied by HPS series 421 Cold Cathode gauges. In addition to these there will also be Convectron gauges. Most of this instrumentation will be located on the Turbo pump manifold.

Powered valves, instrumentation and pumps will be controlled and powered at the Vacuum System equipment rack located on the Balcony. Selective equipment will also be monitored from the Hall A counting house. All control is by Accelerator in the MCC.

14.6 Beam Exit Vacuum System

Vacuum for the target chamber is supplied by an Alcatell 880 ℓ/s Turbo pump backed by an Alcatell 21 cfm 2 stage vane pump which maintains a $1x10^{-4}$ vacuum on the exit beam pipe.

Between the target chamber and the exit beam pipe there is a 0.007 inch kapton window that has a 0.0375 inch hole in it at the beam spot. This window acts as a differential pumping station.

Also between the target chamber and the exit beam pipe is an 8 inch air actuated gate valve that is operated from the MCC.

Vacuum readouts and interlocks outputs are supplied by an HPS 7 Series 275 mini Convectron and an HPS series 421 Cold Cathode gauge which are located near the balcony.

Controls are interlocked to the beam.

The chamber is made of a low mass aluminum corrugated vacuum tube of 1 m diameter.

At the exit point of the exit beam pipe is a beam diffuser that consists of 2.025 inch beryllium windows with a water filled cavity between them for cooling. The water is circulated through the cavity by a water cooling system located on the Hall floor, and is interlocked through the FSD system with 2 flow switches, one on the supply and one on the return line.

Due to high radiation levels at the exit beam pipe all seals in this area are metal.

14.7 Hazards of Vacuum Systems

Hazards associated with the vacuum system are due to rapid decompression in case of a window failure. Loud noise can cause hearing loss. To mitigate the hazard, all personnel in the vicinity of the large chamber with a window are required to wear ear protection when the chamber is under vacuum. Warning signs must be posted at the area.

The scattering chamber is equipped with a large 0.016 in aluminum window that allows the spectrometers to swing from 12.5° to 165° on the left side and 12.5° to 140° on the right side. In order to protect this window when the Hall is open, lexan window guards are installed.

At the inlet of the sieve slit a Møller 8" diameter 7 mil kapton window is provided to separate the target chamber from the spectrometers.

Finally, under the detectors, a 4 mil titanium window is provided.

The 1 ℓ/s vac ion and the cold cathode gauges operate at several KV; consequently there is also a shock hazard.

Additionally, all vacuum vessels and piping are designed as pressure vessels.

14.8 Authorized Personnel

The authorized personnel is shown in Table 14.1.

Name (first,last)	Dept.	Call [4]		e-mail	Comment
		Tel	Pager		
Tech-on-Call Ed Folts	Hall-A JLab	W.B. 7857		folts@jlab.org	*Contact*

Table 14.1: Vacuum in Hall A: authorized personnel. "W.B" stands for the white board in the counting house.

Chapter 15

High Resolution Spectrometers (HRS) [1] [2]

15.1 Overview

The Hall A spectrometers and associated instrumentation are designed to perform high resolution and high accuracy experiments. The goal is to achieve a missing mass resolution of $\sim$ 200-500 keV to clearly identify the nuclear final state. An absolute accuracy of $\sim$ 1% is also required by the physics program planned in the Hall, which implies $\sim 10^{-4}$ accuracy in the determination of particle momenta and $\sim$ 0.1 mr in the knowledge of the scattering angle.

The instruments needed are a high resolution electron spectrometer (HRES) and a high resolution hadron spectrometer (HRHS), both with a maximum momentum capability matching the JLab beam energy, and large angular and momentum acceptance.

A layout of the 4 GeV/c High Resolution Electron Spectrometer is shown on Figures 15.2 and 15.1. Its main design characteristics are given in the attached table. The spectrometer has a vertical bending plane and 45° bending angle. The QQDQ design includes four independent superconducting magnets, three current-dominated cos2θ quadrupoles and one iron-dominated dipole with superconducting racetrack coils. The second and third quadrupoles of each spectrometer have sufficiently similar field requirements that they are of identical design and construction. The overall optical length, from target to focal plane, is 23.4 m. Optically, the HRHS is essentially identical to HRES. In fact the two spectrometers can be used interchangeably to detect either positively or negatively charged particles as needed by any particular experiment. In fact, they are now commonly refered to as "The Left Arm" and "The Right Arms" rather than "Hadron" and "Electron"

The support structure includes all system elements which bear the weight of the various spectrometer components and preserve their spatial relationship as required for 45° vertical bending optics.

[1] *CVS revision* Id: hrs-1999.tex,v 1.7 2008/04/01 16:51:59 lerose Exp

[2] Authors: J.LeRose lerose@jlab.org

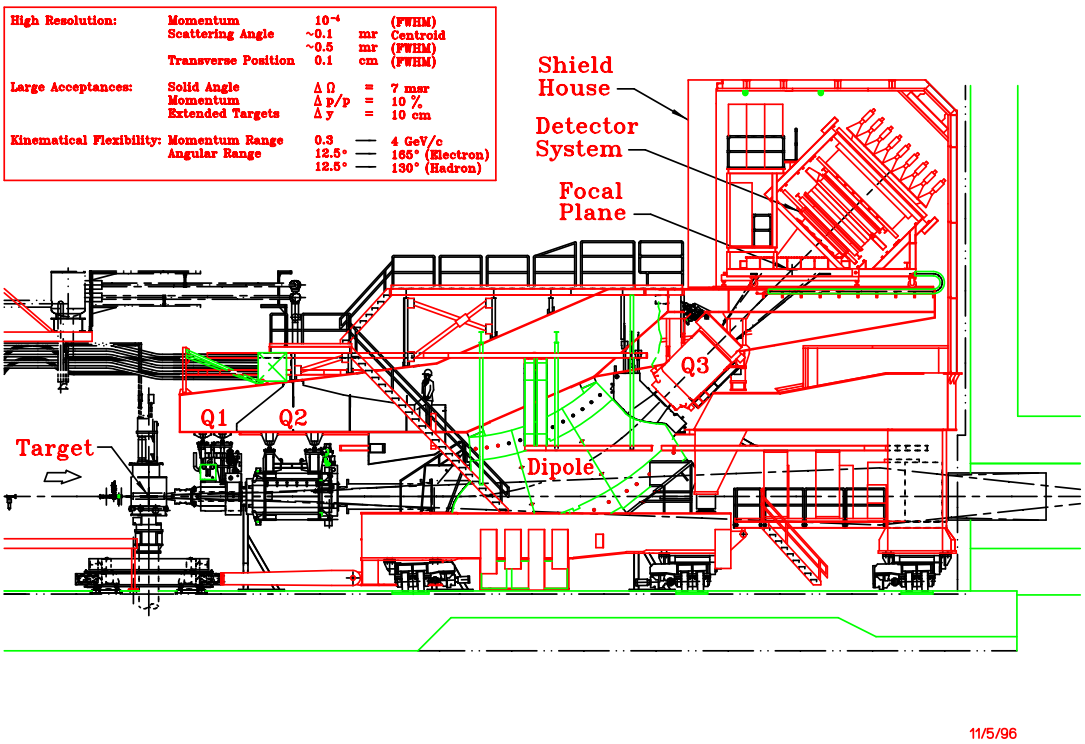

Figure 15.1: A side view of the Hall A HRS spectrometer.

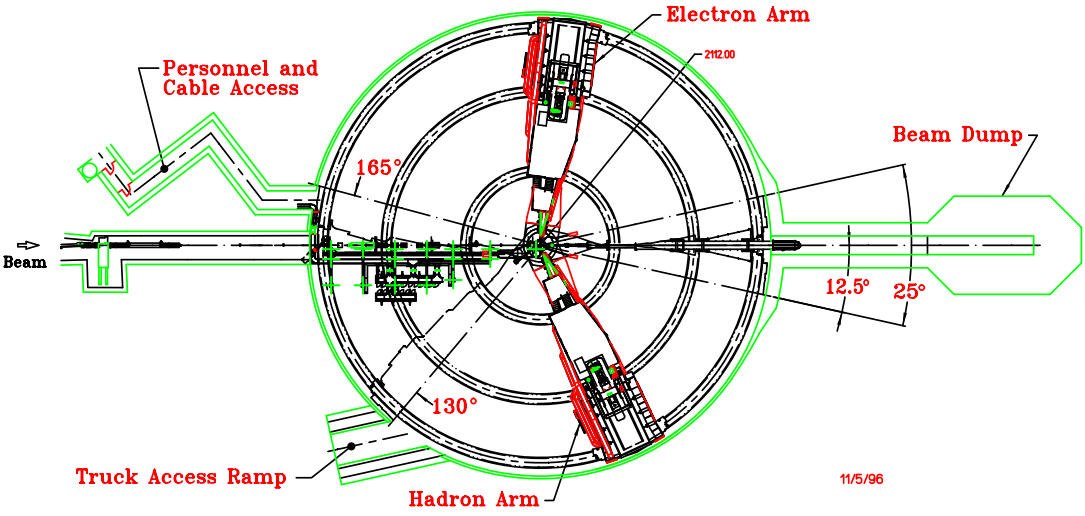

Figure 15.2: A bird's eye view of the Hall A end-station at TJNAF.

The alignment and positioning system includes all the elements which measure and adjust the spatial relationship. The support structure consists of the fabricated steel components which support the magnets, detector, shield house and associated equipment. It is composed of the box beam, which supports the outer elements in fixed relative position atop the dipole; the dipole support bracket, upon which the dipole rests on the jacks; the cradle, upon which the dipole rests through the vertical positioning system, VPS; and a portion of the shield house load through the inboard legs of the gantry; the gantry, which supports the shield house and the magnet power supplies; and the bogies, which support the cradle-gantry assembly and slide on the floor plates and provide the driving power to move the two spectrometer arms.

The detector package (described in detail in Chapter 16) is supported on the box beam and is surrounded by the shield house. It must perform two functions, tracking and particle identification, PID. The most important capability of focusing spectrometers is measuring precisely the momenta and entrance orientations of the tracks. Momentum resolution of 10^{-4} is obtainable, consistent with the resolution of the incident beam.

The actual configuration of the detector package varies from experiment to experiment. The description given here is only an example of what is possible and may well already be outmoded. A particle traversing the detector stack (Figure 15.3) encounters two sets of horizontal drift chambers (x,y) with two planes of 368 wires in each chamber. The track resolution is $\sim$ 100 μm. From the chamber information both positions and angles in the dispersive and transverse directions can be determined. The information from these chambers is the principal input of the tracking algorithms.

The chambers are followed by a scintillator hodoscope plane designated S1. This plastic scintillator array provides the timing reference for the drift chambers, and is also used in trigger formation and in combination with a second hodoscope pair it can provide time of flight particle identification. These scintillators can also be used to perform crude tracking.

The next element encountered by a particle is a gas threshold Cherenkov detector. This is used for particle identification. In the hadron spectrometer this gas threshold Cherenkov detector can be swapped against an Aerogel detector, with a similar function.

The second hodoscope plane, S2, is located directly behind the gas Cherenkov. Its function is essentially the same as that of S1. In the hadron spectrometer an option exists to have this hodoscope pair be preceded by a third chamber, to improve tracking. Each of the two spectrometers have gas and Aerogel Cherenkov detectors which can be used when they are in electron detection mode.

The final elements in the detector stack on HRSE are the pre-shower and the lead glass shower calorimeter. This is used for energy determination and PID.

The hadron detector is shown schematically in Figure 15.4. It consists of two sets of (x,y) vertical drift chambers identical to those of the electron arm. The remaining part of the detection system is used to define the level 1 trigger, as well as for particle identification and timing. It consists of three minimally segmented planes of scintillation counters equipped with photomultipliers at both ends, and it includes Cherenkov counters (gas CO_2 and Aerogel).

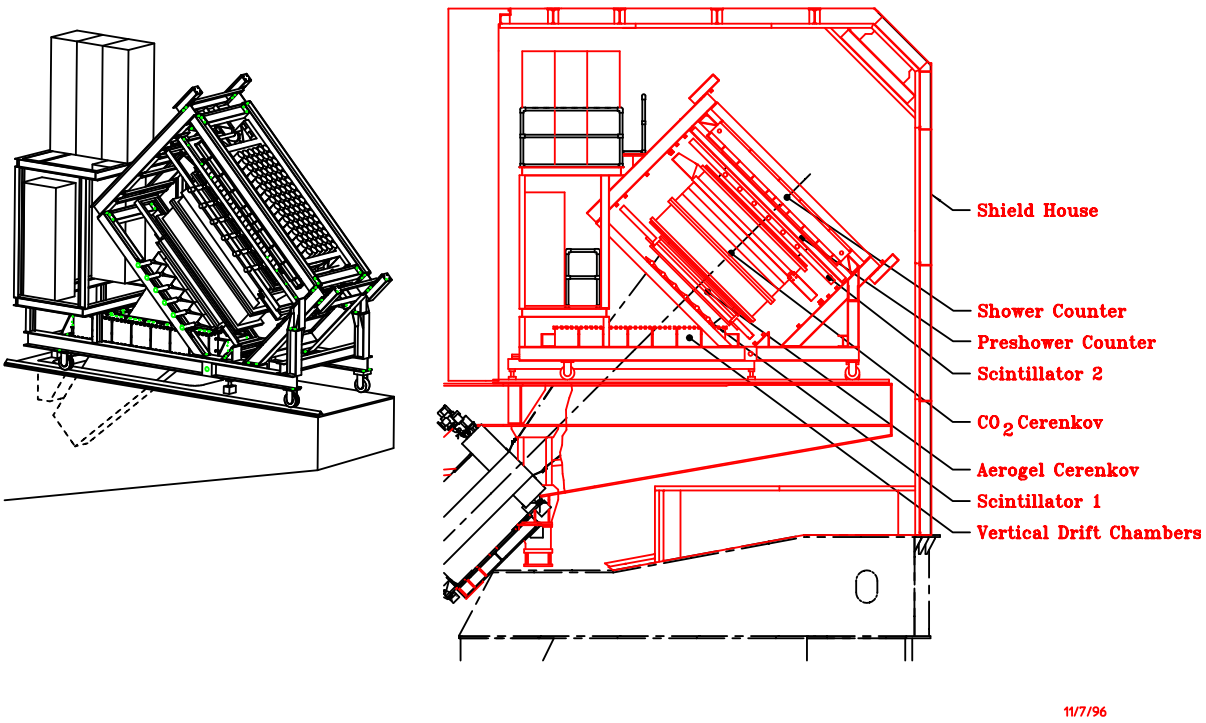

Figure 15.3: The electron spectrometer detector stack.

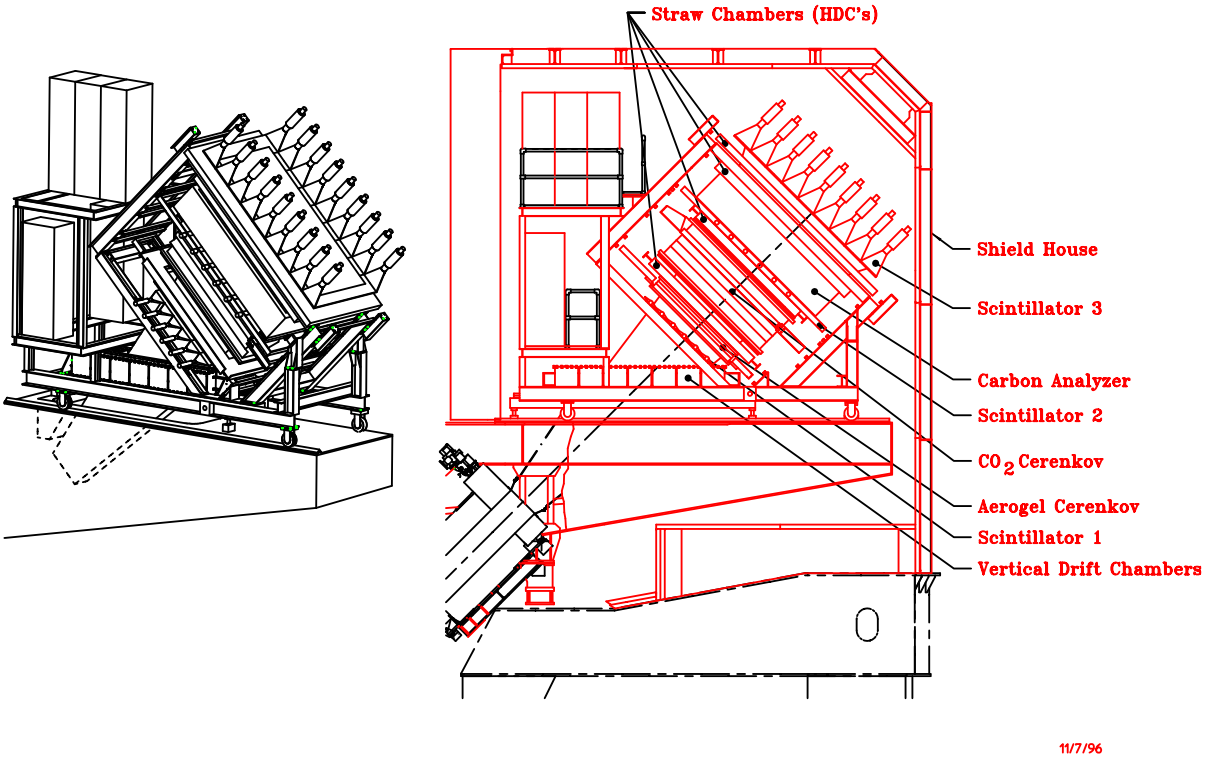

Figure 15.4: The hadron spectrometer detector stack.

In addition, a proton polarimeter is installed in the back of the detector package to measure the polarization of the proton using a segmented carbon analyzer up to 60 cm in thickness to allow measurements over a wide range of proton energies. A pair of front and a pair of rear straw chambers determine the incident and scattered angles, respectively. The third scintillation counter, located at the rear end, provides the trigger for the polarimeter. The polarimeter detectors are dimensioned to accept a 20° cone of scattered protons.

Several support systems are necessary in addition to the basic components mentioned above. They include gas supply systems for the wire chambers, high voltage supplies, readout electronics, a second level trigger, software for data analysis and testing, and a remotely controllable mechanical system.

As for the electron spectrometer, all detectors are mounted on a single rigid carriage along with their associated electronics. The FPP components are mounted on an FPP subframe for installation and removal as a unit. The trigger electronics are located next to the detectors, as for the electron arm.

To reduce the resolution degrading effects of multiple scattering, the entire interior of the spectrometer from the pivot to the detector hut is a vacuum vessel. The ends of this evacuated volume are capped by relatively thin vacuum windows.

15.2 Safety with Regards to the Spectrometer

The principle concern with the spectrometers is that they are large, and have associated vacuum, hydraulic, cryogenic and magnet systems all of which can be potentially dangerous.

The bogies which move the massive 1200 ton spectrometers must be carefully operated. Inspection of the floor and wheels to ensure there is no debris which the wheels could ride over is mandatory. Similarly personnel need to be aware that the spectrometers are moving so that no one inadvertently gets trapped.

The vacuum systems associated with the spectrometers are essentially pressure vessels (see Chapter 14 for more details). Care should be exercised so as not to puncture the windows.

The magnets themselves are installed inside cryostats. These vessels are exposed to high pressures and are therefore equipped with safety relief valves and burst discs.

The hydraulic system that operates the vertical positioning system VPS and the horizontal positioning system HPS operates at high pressure, 3000 - 5000 psi. Therefore one should be careful when operating those systems.

The cryogenic system operates at elevated pressure at 4K. One must guard against cold burns and take the normal precautions with pressure vessels when operating this system. Only the JLab Cryogenics Group are permitted to install and take out U tubes.

The magnets have a great deal of stored energy as they are large inductors. Always make sure people are clear of them and that the dump resistor is attached to the magnet.

There are several major safety concerns with regards to the detectors, namely 1) flammable gas located in the VDC and FPP, 2) ODH hazard due to CO_2 in the Cherenkov

counter, 3) high voltage due to the photo multipliers on the various detectors and 4) a thin vacuum window separating the detector array from the vacuum system in the spectrometers. The clean agent fire suppression system, while installed to suppress fires, can also be a safety hazard. It is possible for an individual to drop down alongside the box beam to the gantry roof inside the shield house. This area, although technically not a confined space, could conceivably become one in the event that the clean agent system was activated. Personnel should have a 5 minute air pack with them in the event they must enter the area alongside the box beam to the gantry roof inside the shield house.

15.2.1 Authorized Personnel

In the event that problems arise during operation of the magnets, qualified personnel should be notified (see Table 15.1). This includes any prolonged or serious problem with the source of magnet cryogens (the ESR). On weekends and after hours there will be a designated individual on call for magnet services. Any member of the Hall A engineering group is qualified to deal with unusual magnet situations but in the event of serious problems the technician on call should be contacted.

Name (first,last)	Dept.	Call [4]		e-mail	Comment
		Tel	Pager		
Tech-on-Call	Hall-A	W.B.			*Contact*
Ed Folts	JLab	7857		folts@jlab.org	
Scot Spiegel	JLab	5900	584-	spiegel@jlab.org	
Mark Stevens	JLab	6383	584-	stevensm@jlab.org	
Gary Dezern	JLab	7119	349-	dezern@jlab.org	
Todd Ewing	JLab	6097		jtewing@jlab.org	
Heidi Fansler	JLab	6915	349-	fansler@jlab.org	

Table 15.1: HRS: authorized personnel. "W.B" stands for the white board in the counting house.

15.3 The Magnets of HRS

Each HRS is composed of three superconducting quadrupole magnets, Q1, Q2, and Q3, and one superconducting dipole magnet. The large quadrupoles were manufactured for JLab by SIEMENS, the small quadrupole by SACLAY, while the dipole was built for JLab by WANG NMR. The quadrupole magnets are referred to as Q1, Q2, and Q3, where a particle first traverses Q1, then Q2 and the dipole magnet and finally traverses Q3. Also available as a separate setup are a pair of superconducting warm bore septum magnets which provide angular coverage down to 6°.

The magnet system is followed by a large steel and concrete detector hut, in which all detector elements reside. Most of the detector elements have been built by universities involved in the Hall A physics program.

The HRS magnet system is the cornerstone of the Hall A activities. Many of the experiments approved in Hall A center on physics at high resolution and other short-range

phenomena, and rely on a spectrometer able to momentum analyze charged particles up to very high momenta. The design value for the maximum momentum accessible to the HRS magnet system is 4 GeV/c.

15.3.1 Magnets and Power Supplies

The HRS magnet's are all superconducting and hence their coils must be maintained at cryogenic temperatures during operations. The LHe required by the magnets is supplied by the End Station Refrigerator, ESR.

All the HRS magnets cryogenic services are supplied through the overhead cryogenic lines. The distribution network begins at the distribution box over the pivot. This box is connected to the rest of the network via the flexible transfer lines over the pivot. The network is adjacent to the upstairs catwalk of the HRS.

Cryogenic information about each magnet is available on the control screens in the counting house, one for each magnet. Normally during run periods the control screens are sent upstairs to the Hall A counting house and information on all the HRS magnets is available on the HRS control screen located in the center of the main console. The control of all magnets is described in a following Section.

The power supplies for the magnets are located on the gantry balcony adjacent to the magnets. The supplies are all cooled with LCW.

The front panels of the power supplies are interlocked. Under no circumstances should the front panel of any supply be opened by anyone other than authorized personnel. There is a keyed electrical interlock located in the Hall A counting house main console to prevent the power supplies from being energized at inappropriate times. There are also signs posted listing the dangers of high magnetic fields.

The control interface for the power supplies is available through the HRS control screen in the Hall A counting house.

15.3.2 Quadrupole Magnets

The quadrupoles provide some of the focusing properties of the spectrometer and to a large extent its acceptance. Operating limits imposed on the quads are as follows: 1850A for Q2 and Q3 and 3250A for Q1.

All three quadrupoles for the HRS spectrometer are warm iron superconducting magnets. The soft iron around the superconducting coil enhances the field at the coil center and reduces stray fields. The basic parameters for the first quadrupole, Q1, are an effective length of about 0.9 m, useful aperture of 0.3 m and a field gradient of 9.5 T/m. To achieve the lowest possible angle setting of the HRS spectrometer (with respect to the beam line) the incident electron beam passes through a notch in the outer yoke of Q1 when the spectrometer is at its smallest angle of 12.5° . The other two quadrupoles Q2 and Q3, are essentially identical with an effective (magnetic) length of about 1.8 meter, a useful aperture of 0.6 m and a field gradient of 3.5 T/m.

The maximum operating currents (assuming a 4 GeV/c momentum particle) for the quadrupoles are about 3000 A, 1700 A, and 1600 A, for Q1, Q2, and Q3, respectively. This will render pole field values of 1.2, 1.0, and 1.0 T, respectively. The energy stored in the quadrupole fields is sufficient to cause an unrecoverable quench if all the energy stored is dumped into the magnets. Therefore a quench protection circuit is incorporated. However, a quench can only happen if the cryomagnets have a helium level below the coil 60% during operation.

The operating current to the Q1 quadrupole coils is provided by Danfysik System 8000 power supplies, which can operate up to 3500 A current and 5 V. The power supplies will be cooled with a combined maximum water flow of 45 liters per minute.

In addition to the main quadrupole windings, all quadrupoles have multipole windings. To further optimize focusing properties of the HRS magnet system, it was intended to operate including some of these multipole trim coils in order to reduce higher order aberrations. The operating current for these multipole corrections is small, only (the multipole corrections are typically less than 2% of the main quadrupole field), of order 50 A, and will be provided by thirty two Lakeshore power supplies. These power supplies can operate up to 100 A current and 30 V voltage. Since the sextupoles were inadvertently installed rotated 90 ° from their correct orientation, these trim coils are now considered useless and there are at present no plans to use them.

15.3.3 Cryogenic Procedures

All cryogenics control is handled by the JLab Cryogenics Group. The cryo control coordinator can be reached at the CHL (x7405) or by calling the MCC.

15.3.4 First Time Startup Check List.

See attached check lists for all quadrupole and dipole magnets (Tables 15.6, 15.7, and 15.8).

15.3.5 Dipole Magnet

The dipole, by virtue of its field index, provides both dispersion and focusing. The present operations envelope states that the supply for the electron dipole may not be operated at a current above 1800 A (4.4 GeV/c). The supply for the hadron dipole may not be operated above 1200 A (3.2 GeV/c).

The dipole for the HRS spectrometer is a superconducting, cryostable magnet. Its basic parameters are an effective length of about 6.6 m, a bend radius of 8.4 m, and a gap width of 25 cm. It is configured to achieve a 45 degree bending angle for 4 GeV/c momentum particles at a central field excitation of 1.6 T. For the HRS dipole to reach 1.6 T an operating current of about 1500 A is required.

The dipole has been designed to achieve cryostability up to a field of 2 T, and this property has been extensively tested up to a field of 1.6 T. The cryostable coils

are equipped with an energy removal circuit to cover the possibility of an unrecoverable quench. However, this can only happen if the helium level drops below the coil during operation. The current to the coils will be provided by a Dynapower System power supply, which can operate up to 2000 A and 10 V. This power supply is located on the gantry beside the dipole, and will be cooled with a maximum water flow of 35 liters per minute. The flow of the magnet cooling water will be regulated by flow meters installed on the floor of Hall A. The total water flow needed to cool the 4 power supplies for the HRS magnet system (dipole and quadrupoles) amounts to 80 liters per minute, with a supply pressure of cooling water for Hall A of 100 psi.

15.3.6 Septum Magnets

The Septum Superconducting Magnet System (SSMS) can be divided into 5 interacting subsystems: the vacuum system, the liquid helium (LHe) and liquid nitrogen (LN2) cooling circuits, the power supply and associated cold and warm power buss, the magnetic coils itself, and the programmable logic controller (PLC) based control system. These subsystems will be described separately below.

15.3.7 Septum Vacuum System

The Septum Magnets have warm bore tubes and therefore the Septum Magnet insulating vacuum system is completely independent from all and any other vacuum systems. There are NO vacuum system interactions between the Septum Insulating Vacuum and any other adjacent vacuum system. The Septum warm bore tube is a rigid stainless steel conductor which is completely self supporting and can withstand a greater than a 1 Atmosphere pressure differential in any direction. When the Septa are configured for some experiments, the beam vacuum extends without interruption from the accelerator injector to the Hall A downstream beam diffuser and through the warm bore of each Septum through both HRS' to the Titanium exit windows. Valves located at the upstream end of the target and the downstream end of the exit beam line allow the volume associated with the magnet, target, and both HRS Spectrometers to be isolated. With these valves closed, the experimental apparatus can be isolated from the Accelerator Beam Line for maintenance , installation or dismounting. Other Septum Experimental configurations such as GDH have vacuum configurations identical to past Pol.He^3 target operations where the beam vacuum terminates upstream of the target chamber with a window. Some Septum experiments will feature a vacuum scattering chamber with spectrometer entrance windows.

15.3.8 The Septum Beam Vacuum

For experiments with vacuum extending from the target chamber to the HRS exit windows the volume under vacuum after the entrance beam line valve can be estimated by adding up the following sub-volumes: The main scattering chamber shell, of length 2

meters and inside diameter 1 m, which contains either waterfall or cryo targets. The volume of the scattering chamber ignoring the small targets inside is estimated to be 6.3 m^3. The Septum magnet warm bore tubes. The total volume of the 0.90 m long, 0.25 Meter high and 0.15 - 0.25 Meter tapered is 0.045 m^3 each. The existing HRS volume of 15 m^3 each. The exit beam line up to the exit beam diffuser. The length of this volume is 22.5 m and the inside diameter is 0.6 m resulting in a volume of 6.4 m^3.

The total Septum Beam volume is estimated to be 42.8 m^3.

Each HRS has a spectrometer exit window described previously.

The entrance Beam line valve is interlocked to the beam line pressure and has a fast close mechanism. The Beam line vacuum is a part of the Hall A FSD system. A beam line pressure that exceeds 1 x 10^{-5} Torr will cause a fast beam shutdown and a closure of the entrance beam line valve. This system and the vacuum dynamics of this system are not changed by the fact that the spectrometers are now connected due to the fact that the small apertures near the scattering chamber limit propagation of fast pressure waves from one spectrometer to another. The Titanium windows have a pressure rating that far exceed what can be expected from any beam line failure. A Titanium window that is subjected to a pressure inversion will be counter yielded and must be replaced.

15.3.9 Septum Insulating Vacuum

The magnet insulating vacuum volume (approx. 1 m^3) will be evacuated initially by a turbo pump and then sealed off(assuming no leaks).The Vacuum volume is protected by two vacuum relief devices that can limit internal pressure to below 1.5 ATM absolute in the event of an internal leak(See BWXT SMA-312-2008-1). A failure of the insulating vacuum cannot influence adjacent systems of vacuum spaces. A failure of the SIV will cause a magnet quench if the Septum is operating and condensation if the Septum is cold. The Septum has interlocks that protect the magnet in the event of a loss of vacuum. The first level interlock will cause a Septum slow discharge if the TC gauge reads between 5 and 30 microns and a fast discharge if the TC gauge exceeds 30 Microns. The SSMS is protected form harm by internal systems during a loss of vacuum and there are no systems beneath the Septum Magnets that can be adversely affected by condensation.

SIV pressure (vacuum) is measured by a thermocouple gauge located on the cryoreservoir, by a cold-cathode gauge mounted on the cryoreservoir, and by a cold-cathode gauge mounted on the lower magnet cryostat. All three gauges are readout and logged by the control system. Under normal conditions, when the magnet is warm a vacuum in the low 10^{-5} Torr range is expected. When the magnet is cold, additional cryo-pumping and the elimination of most outgassing reduces the pressure to the low 10^{-7} Torr range.

15.3.10 Septum Cryogenic Cooling Circuits

Each septum is a dipole magnet consisting of a superconducting coil and cold iron yoke in a single cryostat. The coils are cooled by LHe flowing in 10 parallel paths of 3/8 inch Nickel tubes, each of which are attached to the yoke by numerous Nickel straps.

An LN2 shield box completely surrounds the cold mass, which consists of the coils and cold iron yoke. The LN2 shield is cooled by 8 copper tubes, which are soldered to the outer surfaces. The warm bore shield tube is cooled by conduction from the outer surface through soldered copper support tabs. Cryogens are fed to both the LHe and LN2 circuits via manifolds at the bottom of the magnet from reservoirs located in the control dewar at the top of the magnet. Plumbing on the top of the magnet makes the connection from the reservoirs to the manifolds. A photo of the cooling tubes is shown in Figure 15.5 and a schematic diagram of the LHe cooling circuit is provided in Figure 15.6.

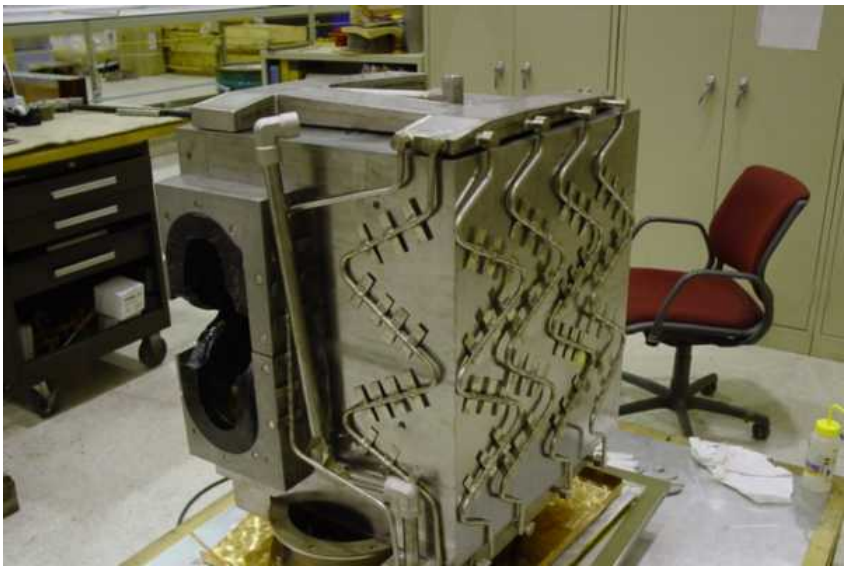

Figure 15.5: Nickel Helium cooling tubes attached to the septum yoke

Normally, the magnet is cooled by thermal siphon flow. Cryogens introduced at the bottom of the magnet from the reservoirs percolate back up to the reservoirs through the cooling circuit, losing density and absorbing power on the way. Gaseous cryogens are exhausted and replaced by fresh liquid as determined by a control system PID loop which maintains the liquid levels in the reservoirs.

During cooldown, through the appropriate manipulation of cryogenic valves in the control dewar, it is possible to cool the magnet using forced flow. In this mode, cryogens are introduced directly into the manifolds from the cryogen supply. The connections between the cryogen supplies and the reservoirs are closed. The reservoir drain valves, a manually operated plug valve in the case of the LHe circuit, and a check valve in the case of the LN2 circuit, are closed. In forced-flow mode, cryogens returning to the reservoirs are not recycled through the magnet. A detailed diagram of the cryogenic plumbing is shown in Figure 15.6 and a detailed Hall A flow diagram is available from the Hall A engineering group.

The temperature of the cold mass and LN2 shield is monitored by an array of thermal sensors, which are read by the control system. Each coil is instrumented with

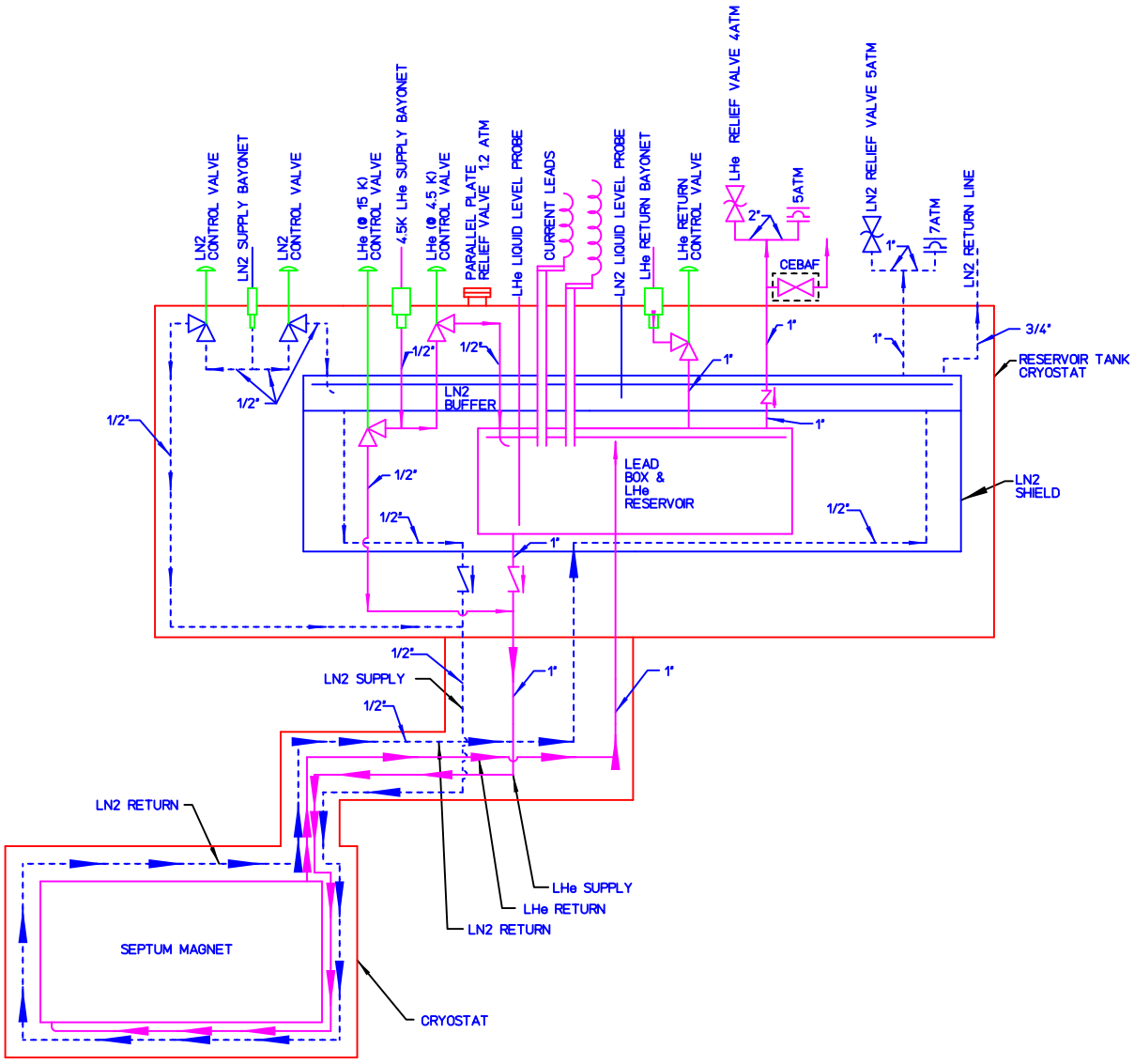

Figure 15.6: Septum Magnet Cryogenic Diagramtum

two platinum resistance thermometers (PT-103) for the range from about 30 to 300 K and two CERNOX 1070 sensors for the range from 4 to 20 K and four PT-103 sensors provide the temperature at various points on the surface of the LN2 shield.

The cryogen system can assume a number of useful configurations depending on the settings of the cryogenic valves. These states are listed in Table 15.2.

State	Description
LN2 Cooldown	Begin forced-flow cooling of LN2 circuit.
Cooldown I	Forced-flow cooling (or warm-up) of LHe circuit using cas provided by CDHXR via JT-1. Inlet gas temperature is regulated to be 50 K below average coil temperature. Gas exhausted via warm return.
Cooldown II	Cooldown of LHe supply line through reservoir fill (JT-2) and exhaust through warm return. Plug valve closed.
Cooldown III	Cooldown of SSMS (plug valve opened) with gas from LHe supply thru JT-1 and exhaust through warm return.
Cooldown IV	Cooldown of cold return line by reverse flow through cold return line (JT-3 open) and exhaust via reservoir through warm return.
Run Mode	Fill reservoir with LHe produced by JT cooling at JT-2. Cool magnet in thermo-siphon mode. Exhaust gas returned through cold return.
Standby Mode	Magnet at LN2 temperature. LN2 system in thermo-siphon mode. LHe system cooled by 80 K helium from CDHXR in forced flow mode

Table 15.2: Standard states of the septum cryogen system

In order to avoid thermal shock during especially in Cooldown I mode, the magnet temperature is reduced slowly from room temperature to about 100 K. This is accomplished by introducing helium gas of variable temperature at a flow of about 10 g/s. The gas temperature is adjusted by regulating the proportion of room temperature helium that is mixed with gas cooled by a LN2 heat exchanger (CDHXR). The temperature of the gas supplied to the magnet is constrained by a control system PID loop to remain at no more than 50 K below the average temperature of yoke and coils. This temperature is adjusted downward to maintain a 50 kelvin temperature differential between all parts of the cold mass.

15.3.11 Septum Electrical Circuit

A block diagram of the SSMS charging circuit is shown in Figure 15.7. Current is provided by a Power10 1000 A silicon-controlled-rectifier (SCR) based supply with an adjustable 10 V output. It is a single quadrant power supply so slow ramp down is achieved through a bypass diode across the poser supply and the warm DC bus series resistance which provides 2 volts. This feature is used to provide a “slow-dump” function whereby

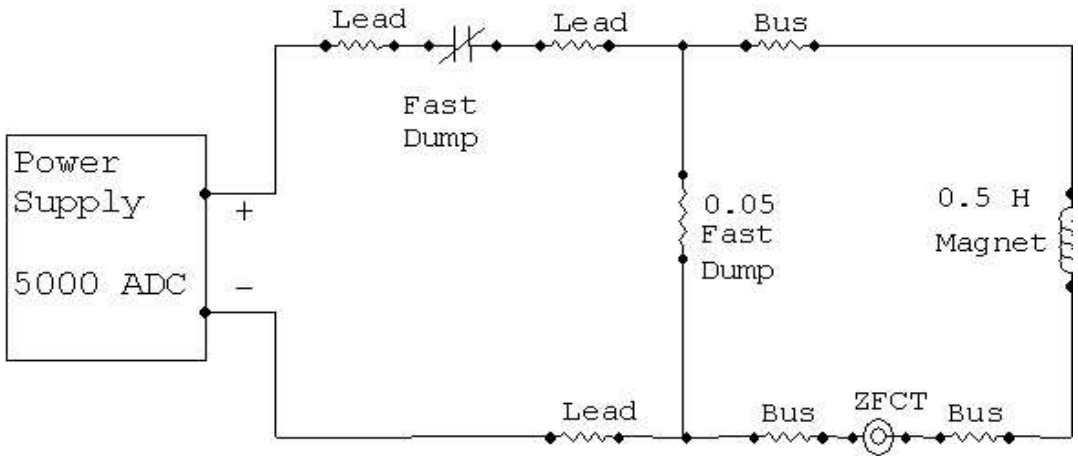

Figure 15.7: Septum Magnet Charging Circuit

the magnet current cab be zeroed with a time constant of 350 seconds. A "fast-dump" capability is provided by a high-speed circuit breaker (manufactured by Scheron SA and rated at 1000 A and 1 kVDC) and an air-cooled high power resistor. (a Post-Glover resistor rated at 140 volts at 700 A with a resistance of 0.2 W). Quench detection, as well as a number of safety-related conditions will result in the initiation of a fast dump. In that event, the fast dump switch which is a normally open type looses its holding current and opens to disconnect the power supply from the magnet. The stored energy of the magnet, 0.22 MJ at full excitation, is then dissipated by the dump resister with a decay time of 5 s. A shunt is employed to measure the current supplied to the magnet and to provide feedback to the power supply for current regulation. The shunt would normally be housed within the power supply enclosure and measured the total output current of the supply. With the dump resistor and magnet wired in parallel the precise measurement and regulation of the magnet portion of the current required that the shunt be relocated to a point in the circuit after the dump switch and dump resister.

All interconnections between room-temperature components of the circuit are made with 1000 MCM flexible air cooled cable. Power connections to the superconducting buss are made via vapor cooled leads (VCLs). These are designed to tolerate a 900 s slow dump after a complete interruption of coolant flow. Each lead consumes 1.8 l/hr/kA of LHe. The flow of coolant gas is regulated and measured by flow controllers interfaced to the control system.

Each coil consists of a pair of 650 turn coils of superconductor wet wound in epoxy. Two voltage taps on the coil leads provide a measure of the coil voltage for the quench-detection systems. In addition, voltage taps are located on the incoming "transition leads" on the cold side of the VCLs within the LHe reservoir. Each voltage tap is isolated by a 10 kW (Cold value) resistor mounted on the coil.

Quench detection is provided by two parallel systems, a digital PLC-based system and a hard-wired analog system. Both systems are designed to be insensitive to inductive

voltages produced during ramping and to provide detection of quenches, not only in the coils, but in the transition leads. The analog quench protection system is considered a "backup" for the digital system. As such, its threshold is set higher.

The digital quench detection system employs isolation amplifiers each connected through a resistive divider to the voltage taps on the leads of a coil. Dividers are used to reduce each voltage tap signal, expected to reach 150 V during a quench, in order to protect the signal conditioners. The amplifier outputs, proportional to the coil voltages, are fed to analog inputs of the PLC. The PLC compares each coil voltage to the average for all eight coils. If the deviation is greater than a set threshold, typically around 1 V, the quench protection system is triggered to generate a fast dump. In addition, a series of thresholds are defined for the transition lead voltages, and a fast dump is triggered when the highest is exceeded.

The analog system follows a design developed in Hall A for the HRS magnets. A simple threshold plus and minus voltage comparator is used to generate an analogue interlock. Exceeding the preset level generates a fast discharge. A trace wire in each voltage sense cable provides an analogue interlock that insures that the cable is plugged into the magnet. A second pair of discriminator channels are devoted to quench detection in the vapor cooled leads.

15.3.12 Septum Control System

The control system consists of three principle subsystems: 1) signal processing electronics, 2) the PLC and its "ladder logic" software, and 3) the console (user interface) PC and the software that runs on it. The control system occupies three racks located behind the shielding wall in Hall A.

The signal processing electronics, provides conditioned (level shifted, gain adjusted, isolated, etc.) signals from sensors associated with other subsystems of the SSMS to the analog and digital inputs of the PLC and, in the exceptional case of resistance thermometers, to the console PC. It also provides the necessary conditioning to interface analog and digital outputs from the PLC to actuators and external controls. For the most part, the signal processing electronics is packaged in modular DIN-rail-mounted components.

A PLC is a special-purpose microprocessor optimized for process control applications. The SSMS control system uses a Direct Logic DL405 PLC manufactured by Automation Direct. Modules provided by the manufacturer for digital and analog input/output are used to interface to the outside world. The PLC is programmed using relay ladder logic, a language that is not unlike assembly language of conventional microprocessors. The ladder logic program is executed in a loop over and over again. The minimum response time of the PLC is therefore the loop time, which for the SSMS control system, is about 25 ms. The analog inputs of the PLC are multiplexed so that eight analog inputs are read by a single ADC. A single input for such a multiplexed ADC is read on each cycle through the ladder logic program. Multiplexing therefore further increases the PLC response time to analog inputs by a factor of 8 to about 200 ms. The PLC

interfaces via the signal processing electronics to devices which measure cryogen pressure; cryogen reservoir level; LCW temperature, pressure, and flow; VCL gas flow; strain in warm-to-cold supports; coil and transition lead voltages; power supply parameters; cryogenic valve posi-tion; and vacuum. The PLC can set the cryogenic valve position, the VCL gas flow, the power supply current and on/off status, the dump switch position, and the cold-cathode vacuum gauge on/off status. The PLC also serves as a repository for information from the console PC. This includes temperatures from resistance thermometers provided by the console PC temperature monitoring process and user-set parameters provided by through the user-interface program. With these capabilities, the PLC provides the following functions:

- Analog inputs are scaled to "engineering units" and stored as IEEE floating point num-bers.
- Scaled analog values are compared to user-set levels and alarm indicators are latched when a level is passed.
- Based on alarm indicators and digital inputs, interlocks are set which may initiate a fast or slow dump.
- Cryogenic valve (JT valve) actuators are adjusted according to user-set target positions.
- The power supply current is adjusted based on a user-set current and ramp rate.
- Gas flow through the VCLs is adjusted based on user set values or automatically based on current.
- Cryogen level and cooldown (or warm-up) is controlled using PID loops.

The third component of the control system is the console PC. This Windows 2000 PC has three main functions.

- First, it serves as a development station for the ladder logic program running on the PLC. A powerful graphical programming and debugging system (DirectSoft 32) allows one to create and document the PLC program, store it on local disk, download or upload it from the PLC via Ethernet and run it on the PLC. There is no direct programming interface to the PLC; all programming is carried out through the console PC.
- Second, the console PC also runs a dialect of the National Instruments human-machine-interface program called LookoutDirect. Using screens created with LookoutDirect, one can monitor the status of analog digital signals, alter user-setable parameters in the PLC, command the PLC to perform control procedures and display the logged history of PLC acquired data. Screens are for the following specific areas of the SSMS: alarm control, CDHXR, interlocks, JT valve control, VCL control, LHe level, LN2 level, LHe and LN2 cryogen circuit status, power supply control, quench protection, setpoints and levels, strain monitoring, temperatures,

vacuum, and LCW monitoring. Logged data is stored in compressed form by LookoutDirect and is available to any Microsoft Open Database Connectivity (ODBC) compatible application (including Excel) via the Citadel ODBC driver.

– Third, resistance thermometers used to measure cryogenic temperatures are interfaced to the control system using eight-input temperature controllers manufactured by Lakeshore. Those de-vices provide temperatures to the control system through a serial interface. Six such con-trollers are used to allow 48 temperatures to be read out. There is not a convenient method to connect and read the serial outputs of the temperature controllers directly at the PLC. In-stead, the Lakeshore controllers are initialized and read-out by a process on the console PC, which simply transfers temperatures from serial inputs on the PC to PLC memory via Ethernet.

15.3.13 Septum Hazard Analysis and Control

Personnel and equipment safety hazards are associated with the operation of the SSMS. Without hazard controls, accidents involving serious injury, costly property damage, and loss of time are likely to occur. However, if engineering and administrative hazard controls are implemented, the probability and consequences of accidents can be reduced the level of accept-able if not negligable risk.

In general, all who are involved in the operation of the SSMS must have completed all certification and training required for work in Hall A (Radition Worker, ODH, and EH&S training and the Hall A walk-through), must be familiar with the current Experimental Safety Assessment Document (ESAD), if one is in place, and must have signed the Conduct of Operations (COO) appropriate to the current state of Hall A.

In the following sections, the hazards associated with each of the SSMS subsystems are discussed. The likelihood and the consequences of each hazard are assigned according to the criteria in Thomas Jefferson National Accelerator Facility Environment, Health, and Safety Manual[EHS] Section 3210. Controls for mitigating the hazard and their effect on the risk is estimated.

15.3.14 Septum Vacuum System Hazards

The principle hazard associated with the evacuation of the SEPTUM beam vacuum arises from the possible failure or damage to the target cell should the magnet beam vacuum be released while the cell is evacuated. This has consequence only if the septum magnets are vacuum coupled to the scattering chamber. This is assumed for this section.

Target Cell Implosion Hazard: The first step in operating the target is the removal of all air from the target, ballast tank and associated plumbing. To do this, the entire system is repeatedly evacuated and back-filled with pure gas. The first back-fill of any part of the system is with helium to reduce the possibility of mixing air and hydrogen. Subsequent back-fills of the target loop or ballast tank use hydrogen. The full procedures for purging the ballast tank and target cell are described in the Hall A Target User's section. It is imperative that the SSMS beam vacuum and target scattering

chamber be evacuated before pumping on the target loop. The target cell is very thin and will implode if the pressure outside it exceeds the pressure inside.

Without controls, the likelihood of this occurrence is estimated to be "likely to happen" given sufficient time. (Likelihood Code C). While there is no danger of personnel injury (the target is completely enclosed by the scattering chamber), the property loss, not to mention the labor required to replace the cell, would involve costs in the $500 to $10,000 range resulting in a Consequence Level of II. The Risk Code with no controls is then 2. In order to mitigate this risk, two controls are implemented:

1. The engineering control of interlocking target pneumatic valve PV21 with vacuum as indicated by the SSMS beam vacuum cold cathode gauge to prevent pumping on the target loop unless the vessel is evacuated. If the gauge is turned off, preventing a valid vacuum measurement, the interlock is opened and evacuation of the cell prevented.
2. As a further control, any venting of the SEPTUM beam vacuum must be approved in writing (or by e-mail) by the target person on-call. With these controls in place, the likelihood of target cell implosion is greatly reduced. The Risk Code is mitigated to level 0.

15.3.15 Hazards Associated with the Cryogenic Cooling Circuits in Septum Magnets

In addition to the normal hazards inherent to cryogenic materials (e.g. the dangers of "burns" and oxygen concentration near cold surfaces) the following hazards associated with the cryogens in the magnet plumbing have been identified.

Over-pressurization of cryogen plumbing: The most likely cause of this event is a sudden loss of the insulating vacuum (LOV). This scenario was analyzed by the magnet vendor [BWXT SMA -312-2008-1]. The analysis was done without consideration of the mechani-cal relief or the normal exhaust lines and therefore represents a worst case. For the helium circuit, the report concludes that the helium pressure would not exceed 5 atm (the burst disk pressure) in the reservoir. For the nitrogen system, the pressure will not exceed the burst disk pressure in either the reservoir or the piping. The reservoirs and piping are quite capable of withstanding these pressures according to the design analysis performed by the magnet vendor.

While the calculations suggest that the system is theoretically safe, one can imagine conditions under which the assumptions of the analysis would be violated. For example, faulty pipe material or a poor weld might be weaker than the design strength; or the relief path might become blocked by foreign or frozen material. In such cases, the piping or joints might fail.

If the failure is internal to the cryostat, this could result in a large internal leak into the insulating vacuum, which might cause over-pressurization of the vacuum vessel. The likelihood of a rupture in the plumbing during normal operation is estimated in Table 15.3.

For the purposes of this estimate, the number of welds and pipes was augmented

Equipment	IndividualFailure Rate (/hr)	# of Items	Total Failure Rate (/hr)
Pipes	$1x10^{-9}$	35	$3.5x10^{-8}$
Valves	$1x10^{-8}$	3	$3.0x10^{-8}$
Welds	$3x10^{-9}$	35	$1.1x10^{-7}$
Total			$1.7x10^{-7}$

Table 15.3: Septum failure rate estimates for internal plumbing

by 20valves were assumed for the cryogenic valves. The failuwre rate, driven by the possible failure of welds, implies one failure per 672 years, i.e. Likelihood Code A (very unlikely to occur) [EHS section 3210]. The consequences and risks of this hazard will be discussed fur-ther in item b below. It is important to note that these estimates assume "normal operation". Inadvertent sudden cooling of the magnet could produce thermal contraction and shock, which would increase the likelihood of failure. This possibility will be discussed later.

Another possibility is that faulty external plumbing might suddenly give way releasing cold cryogens and possibly ejecting fragments at high speed. The relief of a burst disk entails similar consequences. Property loss would be minimal but personnel injury could be severe, though unlikely to be fatal. A Consequence Level of III is therefore assigned to this type of event. There are fewer pipes, valves and welds that are externally exposed, so external plumbing rupture can also be considered to be very unlikely to occur (Likelihood Code A). However, a burst disk rupture is expected to happen given sufficient time (Likelihood Code C). The greatest risk, a Risk code of 3, then comes from the possibility of injury due to burst disk fragments.

The risk can be reduced through the following controls:

1. Burst disks must be located at a height and orientation such that all fragments are blown upward above anyone working in the vicinity.
2. Where it is impossible to relocate the burst disk, a protective screen or tube must be installed.
3. Warning signs must be installed near the burst disks. These should tell workers to avoid the immediate vicinity of the burst disks exhaust.
4. Personnel working on the SSMS platform, near the burst disks and other external plumbing, must be limited during cooldown to those who are aware of the hazard.
5. Burst disks should be inspected regularly to ensure that no foreign material can block their operation. Assuming that these controls are followed, the risk of personal injury will be greatly reduced. This will result in a reduced Risk Code of 1.

Over-pressurization of the vacuum vessel caused by leak in cryogen plumbing: The likelihood of this event is estimated in Table 15.3 to be very unlikely to occur (i.e. Likelihood Code A). The consequences depend on whether gas leaking into the vacuum vessel can be adequately relieved. The main vessel will withstand an internal pressure of 22 psia according to analysis by the vendor. The target service module was designed to withstand an internal pressure of 29.4 psia. The vessel was successfully tested

at UIUC, with all relief valves sealed, to a pres-sure of 2.21 psig as specified by the ASME code. A titanium exit window was individually tested to a pressure of 165 psig.

There are 3 relief ports on the vacuum volume located: on the target service module, directly on the main cryostat volume (at the 315° position) and on the cryoreservoir. K. Gustafsson has shown that the relief valve on the target service module, alone, is sufficient to vent a leak of 2.5 atm helium at 4.5 K and 5 g/s flow. The remaining relief ports are therefore sufficient to relieve the highest flow expected (during Cooldown I) of 10 g/s, even if one becomes stuck or plugged with debris. The most serious consequence of this event is associated with the cost of repair of a major internal leak in the cryogenic system which is likely to be in the $10k to $100k range. A Consequence Level of III is therefore assigned, resulting in a Risk Code of 1.

15.3.16 Hazards Associated with the Septum Electrical Circuit

The charging circuit for the SSMS provides, at full power, 700 A at about 10.0 V to the 1.0 H inductive load of the magnet and leads. At full power the SSMS stores 0.22 MJ of energy. The 2 volt drop, due to resistive losses in the air cooled leads implies a power dissipation of 1.4 kW. The hazards associated with the electrical circuit arise from this large stored energy and power dissipation.

15.3.17 Septum Magnet Quench Hazard

If, for some reason such as local heating due to a heat leak or mechanical energy release, the superconductor in the SSMS becomes locally normally conductive (a quench), resistive heating will cause the normal zone of the conductor to propagate through the superconductor in 0.15 seconds! The Septum magnets are self protecting and the final coil temperature is 120 Kelvin. The coils quickly come to equilibrium with the yoke at an estimated temperature of 10 Kelvin overall. There are no cases where quench protection can remove any energy from the coil during a quench so magnet safety is not enhanced by quench protection. Quench protection can only protect the vapor cooled current leads from burn out in the event that lead coolant is lost . The maximum amount of stored energy that can be removed in a fast discharge with no initial quench is only 40% due to self quenching upon fast discharge.

The method for detecting a quench is to sense the relatively large resistive voltage drop which accompanies local heating of the conductor. This is accomplished by two parallel and independent quench detection systems. The voltage threshold at which the quench is signaled is critical. Calculations indicate that the stored energy cannot be dumped during a quench and that the final temperature is only 120 Kelvin. Redundancy is not required in the quench protection system because the coils are self protecting and the current leads are a no burnout design within the circuit decay tine of 350 sec-onds.

15.3.18 Hazards from Exposed High-current Contacts in the Septum Magnets

If metal tools accidentally come into contact with exposed leads on the SSMS or the

power supply and short them out, the likely outcome will be vaporization of the metal tool and an arc flash which could cause severe burns. When a quench is possible, even when the quench detection system is operating correctly, terminal voltages can exceed 50 V and there are significant (greater than 0.5 joules), conditions which can result in electrocution [EHSc]. With no hazard controls, an event of this kind is likely to happen (Likelihood Code C). Because death could result, the Consequence Level is IV and therefore the Risk Code is 5

Two controls are used to reduce the likelihood and severity of this hazard. First, the power supply is equipped with a ground-fault detector. Any current which leaves the power supply must return. A short from a lead to ground results in the ground fault interlock being opened which leads to a fast-dump and power-supply shut-down. The second control is administrative in nature. The areas inside and on top of the supply where there are exposed high-current leads will be protected by a barrier, which prevents any contact. The power supply will be locked in the off state whenever the magnet platform must be accessed. When the power supply is operated and connected to the magnet, no personnel will be permitted on the magnet platform. JLab rules also require that there be a red beacon to indicate that the SSMS is powered. These controls reduce the Risk Code to 1 by making the probability of an electrical accident "very unlikely to occur" (Likelihood Code A).

15.3.19 Hazards of Static Magnetic Field from the Septum Magnets

Because the septum magnets have a dipole field configuration with an iron yoke, magnetic fields external to the cryostat are not large. These fields are 50 - 100 gauss at 2 feet from the septum magnet. Potentially fatal medical outcomes may result from exposure to magnetic fields in people who have ferromagnetic objects in their bodies. A magnetic flux density exceeding 5 Gauss across the torso region of the body may interfere with the operation of bioelectronic devices. At fields above 10 Gauss, magnetic storage media, credit cards and analog watches may be permanently damaged. Fields can also extend out a significant distance with sufficient strength to attract loose ferrous (magnetic) objects. Such common items include but are not limited to iron/steel cuttings, bolts, screwdrivers, most tools, and some survey equipment. These items can "take flight" in unexpected and potentially dangerous directions. We assign a Consequence Level of III and a Likeli-hood Code of B to the static magnetic field hazard, which results in a Risk Code of 2 if no hazard controls are in place.

During the operation of the septum magnets, work areas in which the magnetic field exceeds 5 Gauss will be posted according to JLab requirements [EHSc]. A red beacon located near the magnet will operate whenever the magnet is powered. These administrative controls are suffi-cient to drop the Likelihood Code of a static magnetic field incident to A (very unlikely). The Risk Code is correspondingly lowered to 0. We note that specific JLab rules apply to work areas in which the whole body magnetic field exceeds 600 Gauss. However, for the SSMS, there is no accessible region for which the

field is that high.

15.3.20 Hazards of VCL Loss of Coolant in the Septum Magnets

Cold helium boil-off gas is used to cool the conductors, which interconnect the water-cooled warm buss to the superconducting buss. Under normal conditions, the flow of helium gas in the these conductors, the vapor-cooled leads (VCLs), is set using a flow controller, which also provides a measure of the flow to the control system. The flow is adjusted automatically by the control system based on the magnet current according to: Flow = 6 + I/700 x 6 SLM where Flow is the gas flow in standard liters per minute and I is the current in Amperes. The VCLs are commercial AMI VCL's designed to a "no-burnout" criteria according the SEP-TUMS SSMS Technical Specification to survive a loss of lead flow for a period consistent with the 350 s slow dump duration. Failure to stop the current in time would result in costly damage to the leads (Consequence Level III). Without hazard controls, an accident is likely to happen if given sufficient time (Likelihood Code C). The unmitigated Risk Code is then 3.

The control system measures the VCL voltage drop and if a the level exceeds 0.1 volts the control system performs a fast discharge Additional administrative controls can improve the reliability of these checks. Each lead's flow is also measured by a simple, yet reliable, "bead" flow meter (made by Dwyer). The operation of the flow sensor and slow dump logic can be verified by periodically simulating an interruption in gas flow. As a second check, the lead flow should be checked and logged by hand once per shift when the power supply is in operation. These controls reduce the probability of damage to the VCLs due to loss of gas flow to an acceptable level (Likelihood Code A, Risk Code 1)

15.3.21 Hazards Associated with the Septum Magnet Control System

The control system and its PLC platform perform many of the checks and controls that enable the SSMS to operate safely and reliably. However incorrect adjustment of the control system parameters, or improperly operating hardware can have just the opposite effect. Discussed below are the primary hazards and inherent risks associated with the operation of the control system.

Radiation Damage to the Control System: Nearly every computer and "complex" embedded controller installed in the high radiation environments at Jefferson Lab has experienced a radiation-induced failure (Likelihood Code C). Such failures typically involve the corruption of RAM. The failure of electronics and, in particular the PLC of the control system, would disable many of the hazard controls discussed above. If such a failure goes unnoticed, the magnet is vulnerable to many serious (Consequence Level IV) failure scenarios.

The only programmable devices that have performed reliably are those containing very simple micro-controllers . Such devices are found in helium level meters, lead flow meters, and simple process controllers. The septum PLC is a complex embedded controller containing an operating system and a large RAM, which may make the device

unreliable in the Hall-A radiation environment.

Ideally, the PLC should be placed in a neutron/gamma radiation-free environment by removing it entirely from Hall-A. The cost, in time and money, to implement this solution makes it impractical. Signal degradation over the necessarily longer cable runs might even introduce additional reliability problems. In order to reduce the risk of radiation damage, the PLC and other control electronics (including the power supply) are located upstream of the SEPTUMS target and are shielded from line-of-sight radiation emanating from either the SEPTUMS or the Moller target by approximately a meter of steal. As a check on the continued operation of the PLC, the ladder logic is required to reset a hardware timer relay once per program cycle (every 23 ms). If the timer is not reset within 1 s, a "heart-beat" interlock is opened which initiates a fast dump. The random nature of radiation damage implies that it is possible for only a few bits of data to be altered while the PLC program continues to run. Therefore, during normal operation of the experiment, the PLC program will be manually reloaded on a regular basis, whether or not there are any indications of radiation damage. These controls, should minimize the likelihood of a hazard associated with radiation damage to the PLC (Likelihood Code B). To reduce the consequences of the most costly failure mode: an undetected and unprotected magnet quench, the independent analog quench protection system is run in parallel with the PLC-based digital system. This reduces the Consequence Level to II. With hazard controls the Risk Code becomes 1.

Error in Control System Operation During Cooldown: As it relates to the cryogen circuit, the control system functions mainly as a monitor of temperature and vacuum. However, because the slow reduction of inlet gas temperature during the Cooldown I phase is managed by a control system PID loop, it is possible that failure of tem-perature sensors or the "mixing valve" actuator control, or inappropriate adjustment of the PID loop parameters could result in 80 K helium being supplied in large quantities to the SEPTUMS magnet when it is still near 300 K. If this continues for a long enough period (greater than 2 hours), the temperature of parts of the magnet could change rapidly enough to cause damage through differential thermal contraction and thermal shock. This could result in leaks in the cryogen plumbing or faults in the coil internal and external electrical connections.

The consequences of an internal cryogen leak have already been discussed. Similarly, damage to the power buss, while not dangerous in itself during the cooldown (no power would be supplied to the magnet), would be expensive and time consuming to repair. Thus the consequence of such an event is chiefly property damage, probably in the range of \$10k to \$100k (Consequence Level III)

Experience gained at JLAB suggests that the likelihood of a temperature sensor failure or valve actuator failure once the valve has been calibrated, is low, but possible on the 10 day to 10-year time scale (Likelihood code C). It is more difficult to estimate the likelihood of incorrect adjustment of the CDHXR PID loop. This control loop has already been used so the basic operation of the system and nominal values of the parameters have been checked. Trained operators who are aware of the hazards will staff the cooldown period. The cooldown will normally be started with conservative settings for

the PID loop. For these reasons, the 10-day to 10-year time scale for an accident seems appropriate.

Coupling Likelihood code C with Consequence Level III yields a Risk Code of 3 if no hazard controls are implemented. The most straightforward way to reduce the risk is to ensure that an operator is present during critical phases of the cooldown. This permits manual intervention in case of a hardware fault and quicker correction in case of misadjustment of the PID loop. The greatest possibility of thermal shock is during the Cooldown I phase over which the magnet is brought from 300 K to 100 K. Two modes of running will be implemented during this cooldown phase:

1. Between the hours of 8:00 AM and 5:00 PM, Monday through Friday, an operator will be on hand in Hall A or a JLab office. The status of the cooldown will be checked and logged by the operator at least once per 30 min. The cooldown will be operated in "automatic" mode with the CDHXR mixing valve under the control of the PID loop. Cooldown will typically proceed at a rate of 3 K/hr.
2. Between the hours of 5:00 PM and 8:00 AM on Monday through Friday and all day on Saturday and Sunday, the magnet will be operated in "manual" mode. The PID control of the CDHXR mixing valve will be discontinued. The valve will be set manually at a fixed setting corresponding to from 1-2 K/hr cooldown rate. During this period a designated operator will be required to carry a pager and be "on call". The control system will be set to generate pager calls based on any alarm condition. In order to prevent rapid warm-up of the magnet in the event of loss of LN2 supply to the CDHXR, the cooldown gas inlet cryogenic valve (JT2) will be closed automatically if the supply gas temperature exceeds a threshold around 300 K. In order to ensure that operators have the proper level of experience and understanding of the hazards involved in the cooldown, only explicitly designated and trained personnel will be allowed to serve as operators or to interact with the control system. Following these procedures, the likelihood of a control system problem is reduced to Likelihood Code A with a corresponding Risk Code reduction to 1.

15.3.22 Hazard controls for the Septum Magnets

Table 15.4 below summarizes the likelihood, consequences, risk, and controls of the hazards discussed above. Codes in parenthesis are without controls.

Interlocks The control system maintains a number of interlock chains, which must be closed for the magnet to be operated. The required conditions and their current status for each interlock chain is sum-marized on the interlocks page at the control system console. A list of interlocks is shown in figure 15.8.

Thresholds for the some of the conditions of the interlocks are set from the "Set-points" page which requires the Magnet Expert password. All conditions are latched by the PLC. Therefore, once a condition has faulted, the associated interlock will remain open, even if the condition is no longer in the fault state, until the reset button is pressed. Each interlock chains is discussed in greater detail below.

Hazard	Controls	Like-lihood	Conse-quence	Risk
Target cell implosion by ventingbeam vac-uum when target is evacuated	Valve to cell vacuum pump inter-locked to septum beamline pres-sure. Approval from Target group to vent.	A (C)	II	0(2)
Over-pressurization of cryogen plumbing. Ex-ternal plumbing,burst disk rupture	Physical barriers, warnings, ap-proved personnel on plat-form, inspect burst disks.	C	I(III)	1(3)
Over-pressurize vac-uum vessel Damage to magnet due to quench	Quench detection and protection system regular tests.	A A	III I	1 0
Burn or electrocution caused by touching an exposed high-current lead	Power supply (PS) ground fault interlock. Barriers around PS ex-posed leads. Lockout of PS when magnet platform being accessed. Magnet platform off limits when PS in operation.	A(C)	IV	1(4)
Injury or damage due to static magnetic field	5 Gauss area posted red beacon when magnet is powered	A(B)	III	1(2)
Interruption of gas flow to VCL when magnet is powered	Fast dump if flow interrupted or transition lead voltage exceeds 100 mV. Test system periodically.	A(C)	III	1(3)
Unnoticed radiation damage to PLC or control hardware	Shielding and control system placement in the hall, heart-beat interlock. Regular PLC program reloads	B(C)	II(IV)	1(3)
Control system fault during Cooldown I phase	Approved operator during Cooldown I phase when control system runs cooldown. Auto-matic clo-sure of JT2 if gas tempera-ture exceeds threshold.	A(C)	III	1(3)

Table 15.4: Summary of Septum hazards and risks. Codes in parenthesis are without controls.

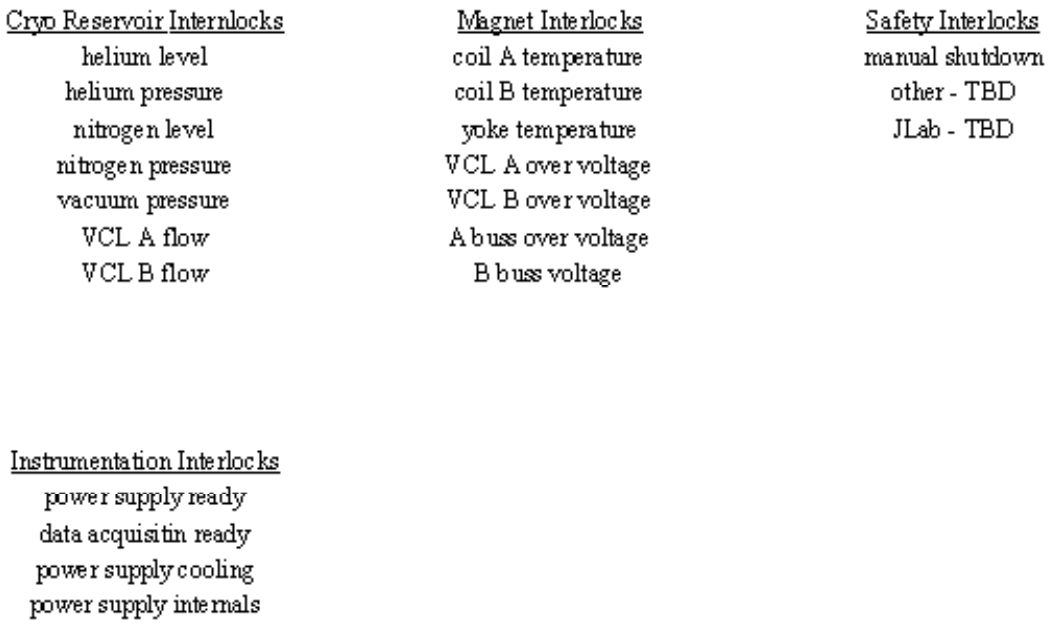

Figure 15.8: Septum magnet interlocks

The Slow Dump Interlock Chain: Any fault condition results in a slow dump (powered ramp-down) of the magnet power supply. This happens in about 350 sec (6 min).

The Power Supply Interlock Chain: Conditions in this chain map directly to conditions maintained by the power-supply itself. So this interlock chain is, in fact for display purposes. The power supply is hardware interlocked by these conditions and will not go to the ON state unless are met.

The Turn-On Interlock Chain: In addition to the hardware power supply interlocks, additional conditions must be met before the PLC permits the supply to be activated. It is important to note that once the supply is acti-vated, a fault on the turn-on interlock chain does not necessarily cause the supply to turn off. However, most of the turn-on interlock chain conditions also appear in one form or another on the slow or fast dump chains.

The Quench Interlock Chain: This chain is only satisfied if no coils have sensed a quench according to the digital quench pro-tection system.

The Fast Dump Interlock Chain: Any fault condition results in a fast dump of the magnet energy. This happens in about 90s

15.3.23 Monitoring systems

The monitoring of the SSMS is carried out by the user interface program running on the console PC. This program, written using the LookoutDirect Human-Machine Interface (HMI) system, provides numeric and graphical information about all subsystems of the SEPTUMS SSMS. A historical data base is maintained in compressed form on the local

disk. All parameters provided by the PLC are recorded to the data base. The Lookout program also maintains an event log which includes information about "button presses" and parameter adjustments made at the console.

An important function of the Lookout program is management of alarms, defined as events which require attention of the experiment shift staff or Magnet Expert. Each alarm condition is identified by a number and all appear on the alarms control page. Some alarms map directly into conditions incorporated in the interlock chains and so may cause the PLC to take some action, such as initiating a fast dump. Alarming may be disabled for any of the alarm conditions (this does not prevent the PLC from taking action though). If enabled to do so, the control system will phone a digital pager carried by the magnet on-call person and transmit the alarm number when an alarm occurs and is enabled. In order to test the paging system, a special "just checking in" alarm can be programmed to call the magnet on-call person periodically.

15.4 Operation of the HRS Magnets

15.4.1 Introduction

This is an abbreviated operating manual for the HRS superconducting magnets specifically designed for Hall A experimenters. It provides instructions for setting currents, invoking NMR field regulation and general system monitoring. Curious readers are directed to the references for more in-depth operating instructions and other technical manuals. Copies of the following supporting documents are available in the Hall A Control Room (see Table 15.5).

References	
WANG NMR Dipole	Operation Manual Power Supply
Dynapower	User Manual
Appendix	NMR Tesla meter
Appendix	NMR Field REgulation
Siemens/Fug	Q2/Q3 Power Supply Manual
Saclay/Danfusik	Q1 Powersupply Manual
TOSP	HRS Dipole
TOSP	HRS Quadrupole Q1
TOSP	HRS Quadrupole Q2, Q3
HRS	SC Dipole Magnet Safety Review Vol. 2
HRS	SC Quad Safety Review Vol. 1
OSP	HRS Septum Magnets

Table 15.5: HRS Magnets: extra manuals available in Hall A Control Room.

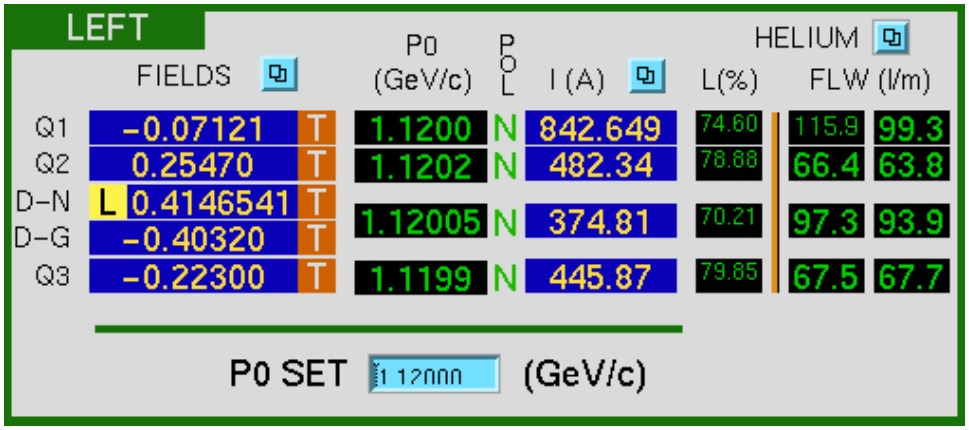

Figure 15.9: A part of "Hall A General Tools" screen, used for HRS (left) magnets control.

15.4.2 Simple HRS Setting (Autopilot Mode)

The magnets are controlled remotely using EPICS [14] and MEDM [18] GUI, provided that everything is working and power supplies are turned on and ready to go. The appropriate interface runs on computer hacsbc2 (see Section 25.9). On the "Hall A General Tools" control screen, in the upper left, there is a rectangular box for each spectrometer that (see Figure 15.9).

This box displays a brief summary of the status of the spectrometer magnets and their cryogenic systems. The blue fields (with white numbers) give readbacks of the magnetic fields and currents in each magnet. The black fields also give readbacks, however in this case if the text appears green those parameters are OK while if they are red then that parameter is out of tolerance and may indicate a fault condition. For example if the helium level goes below a certain point the magnet will be automatically turned off. In some cases it may be desirable to monitor certain critical quantities on a strip chart (e.g. Magnet settings). A strip chart tool is available for this purpose from the bottom of the main control screen.

To set the spectrometers for a given value of central momentum (P0) type the desired P0 value into the yellow P0 SET box and hit return. The magnets (except the septa magnets) will be automatically set to the correct values. All green numbers in the P0 column indicates that the desired field or current settings have been reached.

Setting the septa magnets is described in Section 15.4.6.

Caution: Regarding the dipoles, in general it's a bad idea to assume that at the first instant that the P0 display turns green that the desired field has been reached and you can start taking data. Stable field is in general not achieved for from 15 to 30 minutes after reaching the nominal desired field. This settling time depends on the magnet (Hadron is slower than Electron) and the magnitude of the field change (small changes settle faster than big changes). Experimenters are advised to observe both the field reading and current reading on the magnet in question and verify that things are

stable to their satisfaction before proceeding.

15.4.3 Powering Up Dipole Magnets:

Use these instructions to recover from loss of a magnet due to a fault (e.g. He level or lead flow fault). The order of actions matters.
(Contact Tech on call if anything behaves funny or things don't respond as expected. Sometimes after a trip an access to the Hall is required to reset things).

1. Wait for Iout=0 (you can't and don't want to do anything while the magnet is in emergency fast dump mode.)
2. While waiting, make a log entry re the fault. Give details such as time, coincident activities, and nature of the fault.
3. Make sure the fault is cleared. (e.g. He level and flow rates returned to normal values and stable)
4. In the HRS Hadron (Electron) Dipole Systems' control panel:

   (a) Press RESET (verify that all faults are cleared in the middle column)
   (b) Press START (Display will indicate Power Supply ON and magnet ENGAGED)

Power supply and magnet are ready to go. From here you can return to "Autopilot Mode" (see Section 15.4.2).

15.4.4 Starting Q1 Power Supply:

Do this when a fault causes the power supply to shut off. Wait for fault to clear (watch He levels).

1. Push RESET (check all faults cleared)
2. Select desired polarity
3. Push ON
4. Type in ISET (yellow field) or re-enter P0 in Autopilot Mode.

15.4.5 Starting Q2/3 Power Supply:

Do this when a fault causes the power supply to shut off. Wait for cause of fault to clear (watch He levels).

1. Push RESET
2. Select desired polarity
3. Push ON
4. Type in ISET (yellow field) or re-enter P0 in Autopilot Mode.

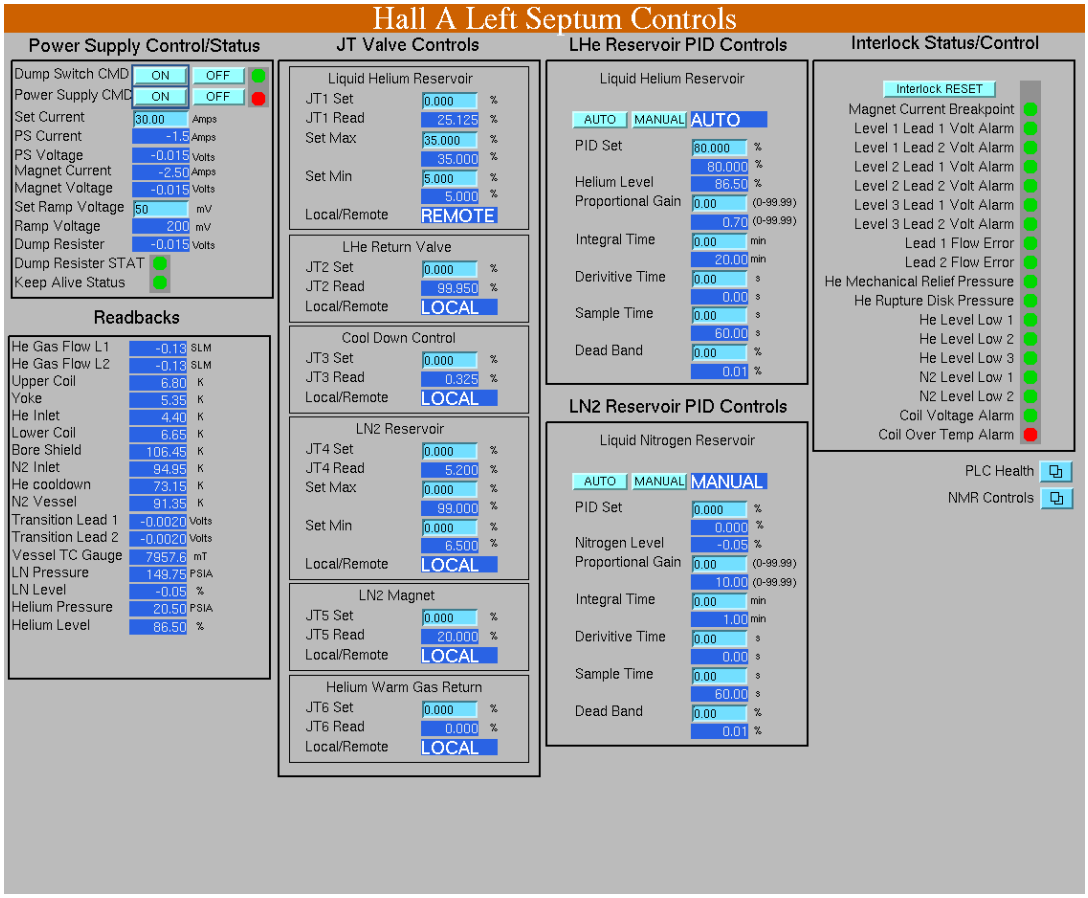

Figure 15.10: Septum Controls Screen.

15.4.6 Starting a Septum Magnet

The EPICS screen for septum magnet control can be accessed as follows. From the Hall A Main Menu select Magnet Controls then from the activated pull down menu select Septum Right 0r Left Controls. A copy of the EPICS screen is shown in Figure 15.10 .

Please note that the cycle from command to action can be quite slow so expect to wait many seconds for an indication of command execution. While it is more usual to use the HRS spectrometer Momentum setting routine to set all the HRS magnets including the septum the septum can also be run standalone. The steps below must be used to prepare septum for energization in either case.
Energizing the septum:

n.b. Except for step 1, which requires a Hall access, NEVER proceed to the next step without successfully completing the verifying observation. If the verifying observation is not satisfied call an expert for consultation.

1. Turn on Power supply in the Hall

2. Clear interlocks and observe all green status in upper right of Septum Controls page
3. Verify operating conditions. Observe: Coil Temperature = 7 K, Helium Level $\geq 85\%$, He Gas Flow L1 and L2 about 10.6 SLM
4. Dump Switch CMD ON then observe green light next to ON/OFF
5. Power Supply CMD ON then Observe green light next to ON/OFF
6. Enter p0 in the po set box as with other magnets or enter desired current in the Set Current box then observe magnet coil voltage and current increase
7. Continuously verify proper operation. He Gas Flow L1 and L2 should increase with current. Coil temperature drops during ramping. A slight initial increase at start of ramp is normal. The coil Temperature drops significantly at 100 Amps and reaches 6.3 K at 350 Amps

Circuit Parameters:
Imax = 1800 A, L = 2.52H, Tau(slow) = 420 s, 640 MITS
Rdish = dump resistor + cable resistance = total resistance
Rtotal = .0045 + .0015 = .006 Ω
Rdump .134 Ω , L= 2.55 H, Tau(fast) = 19 s, 29 MITS

Magnet Dipole	signature, date
Arm (Circle one)-Electron Arm, Hadron Arm	_____
Megger check of coil @ 250 V DC_____	_____
Visual inspection walk through	_____
Set water inlet pressure to 100 psi_____	_____
Coil A Trip Voltage (1.2V+) value _____	_____
Coil B Trip Voltage (1.2V-) value _____	_____
Magnet Lead A Trip (1.2V+) _____	_____
Magnet Lead B Trip (70mV) value _____	_____
Magnet Leads are not bipolar and only work in the PS forward polarity.	
Magnet lead A must be connected to the PS+	
Level Trip (70%) value _____	_____
Magnet Flow A Trip (60 SLPM) value _____	_____
Magnet Flow B Trip (60 SLPM) value _____	_____
Operational Test of trips _____	_____
PS overcurrent trip (2000A) _____	_____
See manual for voltage setting and gain (4V=800A)	
Magnet Ready for Operation	_____

Table 15.6: Hall A Dipole Magnet Check List (15 August 1996)

Circuit Parameters:	
Rext = 0.075 Ω, L = 25 mH, Tau = 0.3 s, Vthreshold = .1V Imax = 3250A	
Magnet (Circle one) - Q1,	_____
Arm (Circle one) - Electron Arm, Hadron Arm	_____
Visual inspection walk through	_____
Set water pressure at 100 psi inlet _____	_____
Coil A Trip Voltage + value_25mV _____	_____
Coil B Trip Voltage (-) value_25 mV _____	_____
Magnet Lead A Trip (+) Voltage_80 mV _____	_____
Magnet Lead B Trip (-) Voltage_80 mV _____	_____
Level Trip percent 980% _____	_____
Magnet Flow A Trip (30 SLPM+) setting _____	_____
Magnet Flow B Trip (30 SLPM-) setting _____	_____
Operational test of trips _____	_____
Magnet Ready for Operation	_____
	_____

Table 15.7: Hall A Q1 Quadrupole Magnet Check List (15 August 1996)

Circuit Parameters:	
Rext = .125 Ω, Tau = 3 s, Quench Vthreshold = .1V, Imax = 1850A	
Magnet (Circle one) - Q2, Q3	_____
Arm (Circle one)-Electron Arm, Hadron Arm	_____
Visual inspection walk through	_____
Meggelr Magnet @ 250 V DC _____	_____
Set water pressure at 100 psi inlet _____	_____
Coil A Trip Voltage (+) value _____	_____
Coil B Trip Voltage (-) value _____	_____
Magnet Lead A Trip (+) Voltage _____	_____
Magnet Lead B Trip (-) Voltage _____	_____
Magnet Lead Trip (trim) Voltage _____	_____
Level Trip percent (80%) _____	_____
Magnet Flow A Trip (50 SLPM+) setting _____	_____
Magnet Flow B Trip (50 SLPM-) setting _____	_____
Magnet Flow trim Trip (3.6 SLPM) setting _____	_____
Operational test of trips _____	_____
Magnet Ready for Operation _____	_____
	_____

Table 15.8: Hall A Q2/Q3 Quadrupole Magnet Check List (15 August 1996)

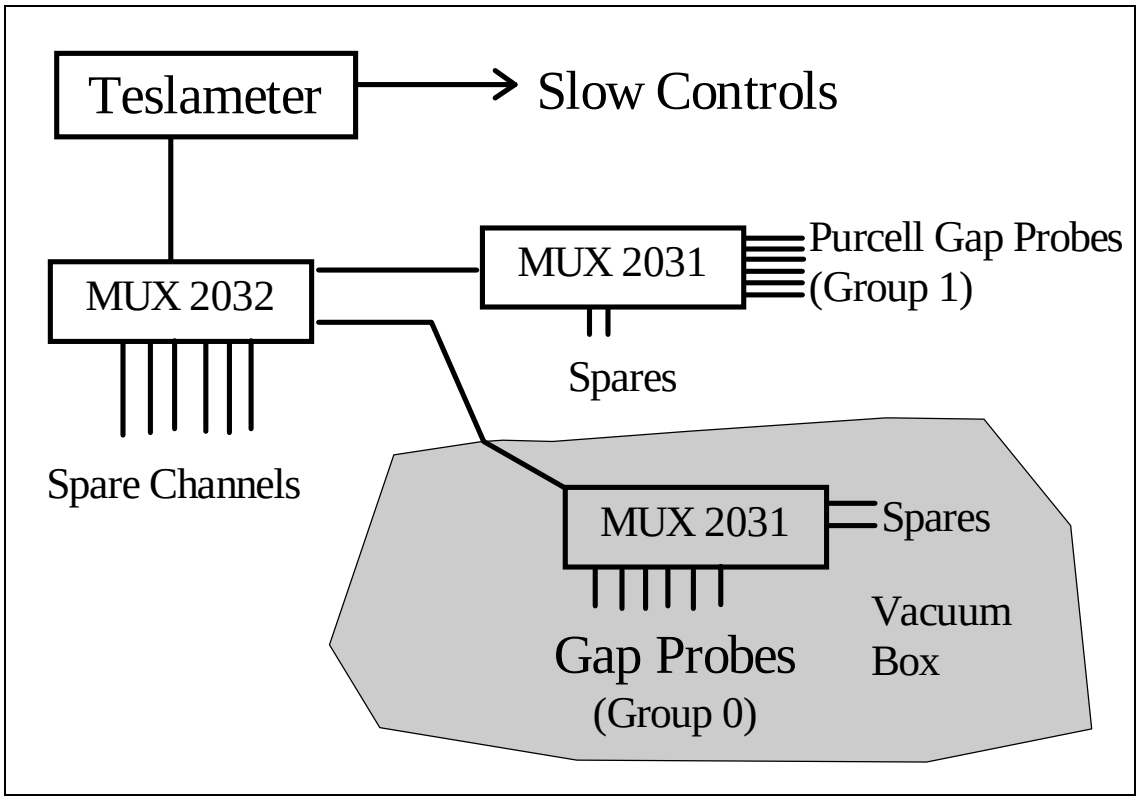

Figure 15.11: Basic layout of NMR system

15.5 Field Monitoring [3] [4]

The field-monitoring controls are available using the main HRS screen (see Figure 15.9). The dipoles' field is measured using NMR Teslameters and field probes.

15.5.1 Dipole Field Monitoring Electron Arm

Basic Setup

Each spectrometer dipole magnet is equipped with a Metrolab PT 4025 NMR Teslameter, several field probes, and multiplexers (to allow switching between the probes). Details of the operation and theory of operation for the Teslameter can be found in its user manual, a copy of which is available in the the counting house. The basic layout is shown in Figure 15.11

The "Gap Probes" (Group 0 in the controls) are located in two groups of three; one group on the low field side of the gap and the other on the high field side of the gap. The groups of three are made up of one each of the manufacturer's type 3, 4 & 5 probes,

[3] *CVS revision* Id: nmr-1999.tex,v 1.4 2003/12/17 03:59:48 gen Exp
[4] Authors: J.LeRose lerose@jlab.org

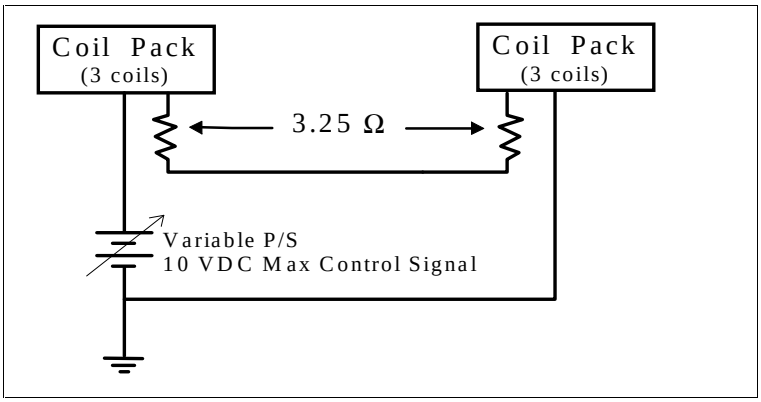

Figure 15.12: Gradient Compensating Circuit.

Probe Type	Field Range (T)
3	0.17 - 0.52
4	0.35 - 1.05
5	0.70 - 2.10

Table 15.9: Dipole NMR probe field ranges

designed to cover different field ranges (see Table 15.9). The six "Purcell Gap Probes" (Group 1 in the controls) are located in the Purcell gap of the magnet and consists of two each of the above types. *Note: Since the fall of 1998 the multiplexer-multiplexer in the electron arm, MUX 2032, has been bypassed and hence the "Purcell Gap Probes" are currently unavailable. There are no plans to fix this multiplexer in the immediate future.*

The "Gap Probes" are equipped with coils which provide a field gradient that cancels out the field gradient of the magnet in the vicinity of the probe. These gradient compensating coils are part of a simple circuit that is completely independent of the Teslameter. The basic circuit for the compensating coils is shown in Figure 15.12

The following graphs (see Figures 15.13), and 15.14can be used to determine optimum values for the compensating coil control voltage. It should be noted that the setting of the compensating coil current is not very critical in most cases. In general if you're within 10% of the correct value everything should work fine.

15.5.2 NMR Operating Procedure

When running in Autopilot mode (see: Simple Spectrometer Field Setting) the compensating coil voltage is set automatically and the probe appropriate for the field desired is selected. The gaussmeter is placed in SEARCH Mode and the dipole power supply regulator is turned on. In this case the dipole current is adjusted to achieve the desired field. The user should just stand back and let it work. What follows are instructions for

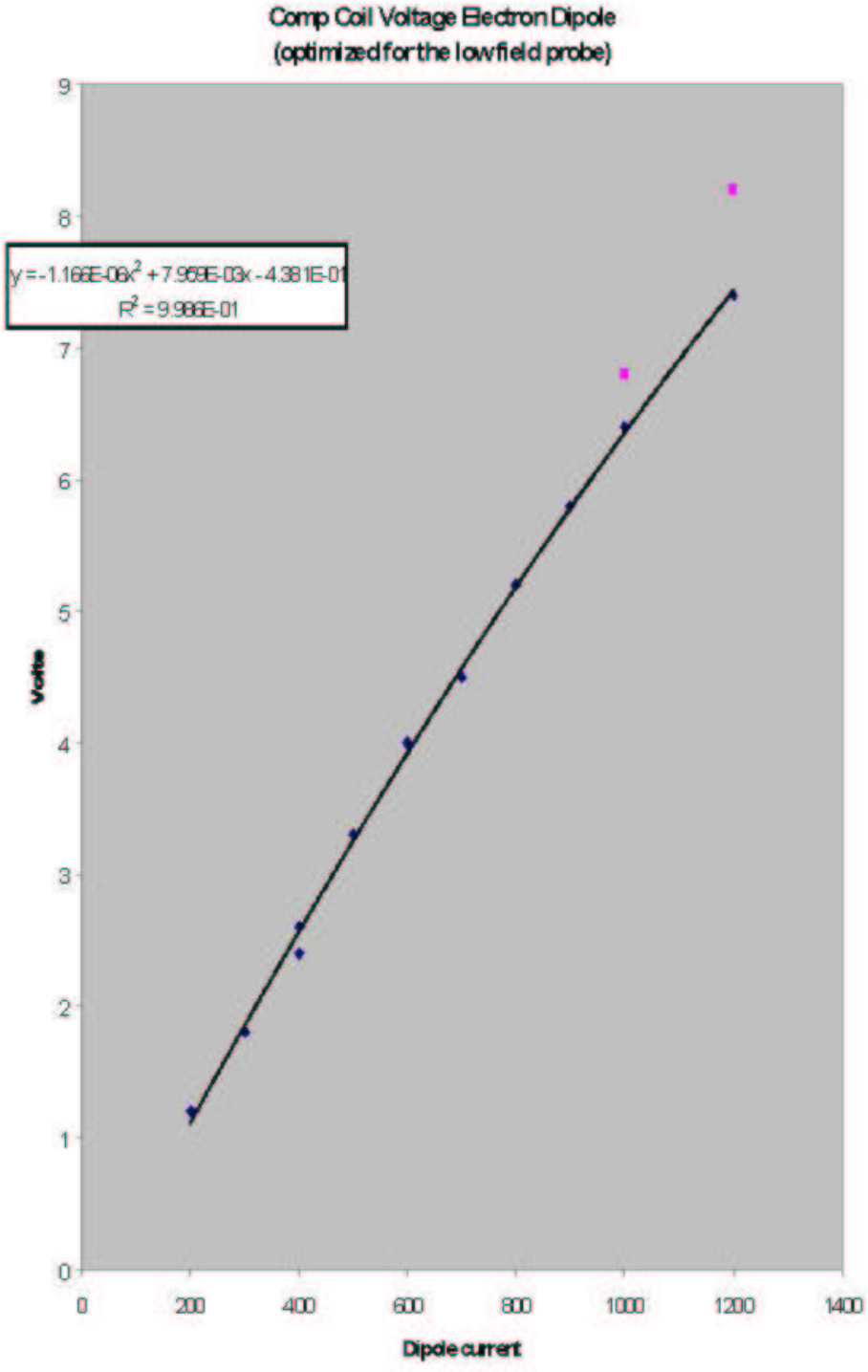

Figure 15.13: Control Voltage calibration for the Left Dipole.

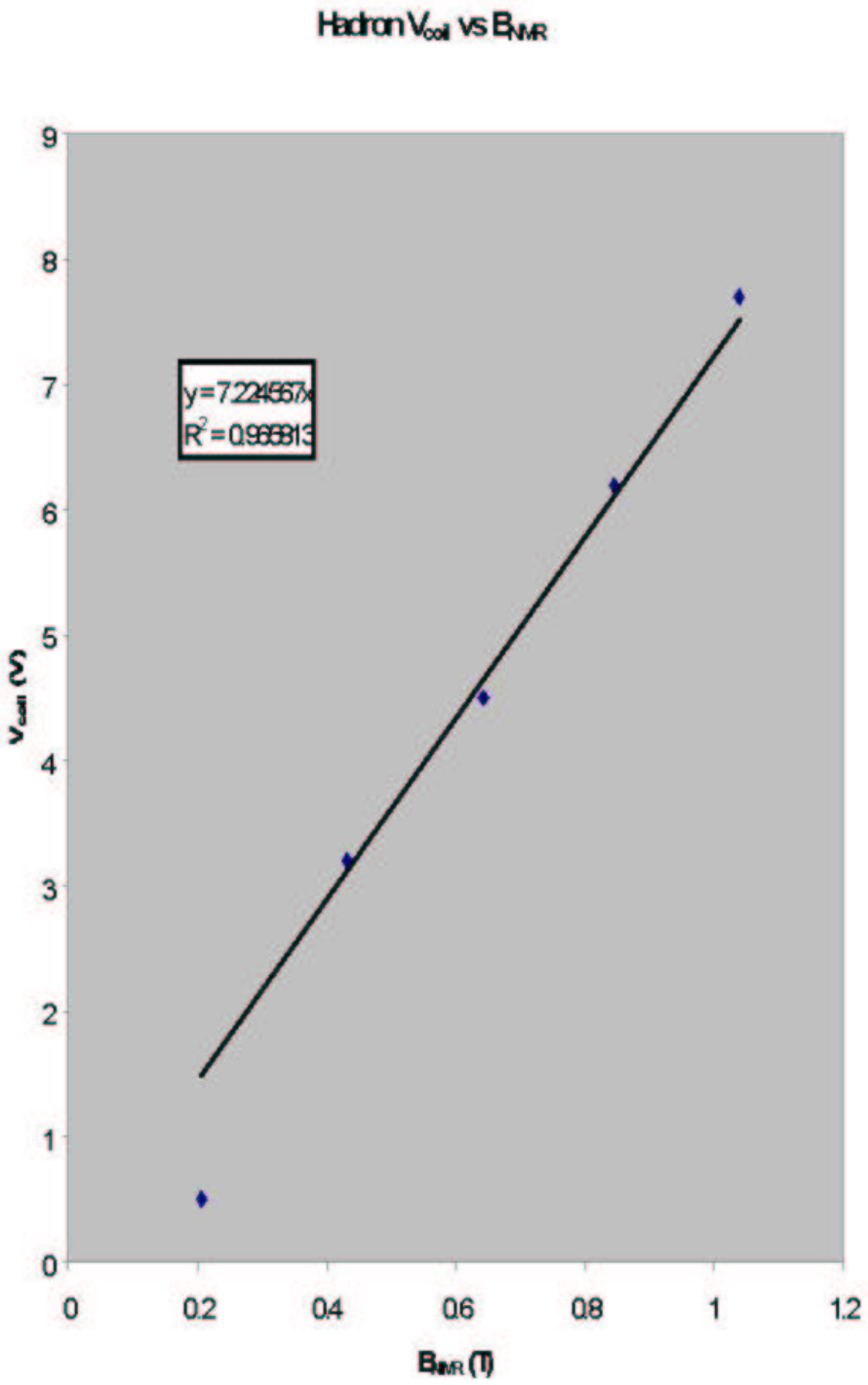

Figure 15.14: Control Voltage calibration for the Right Dipole.

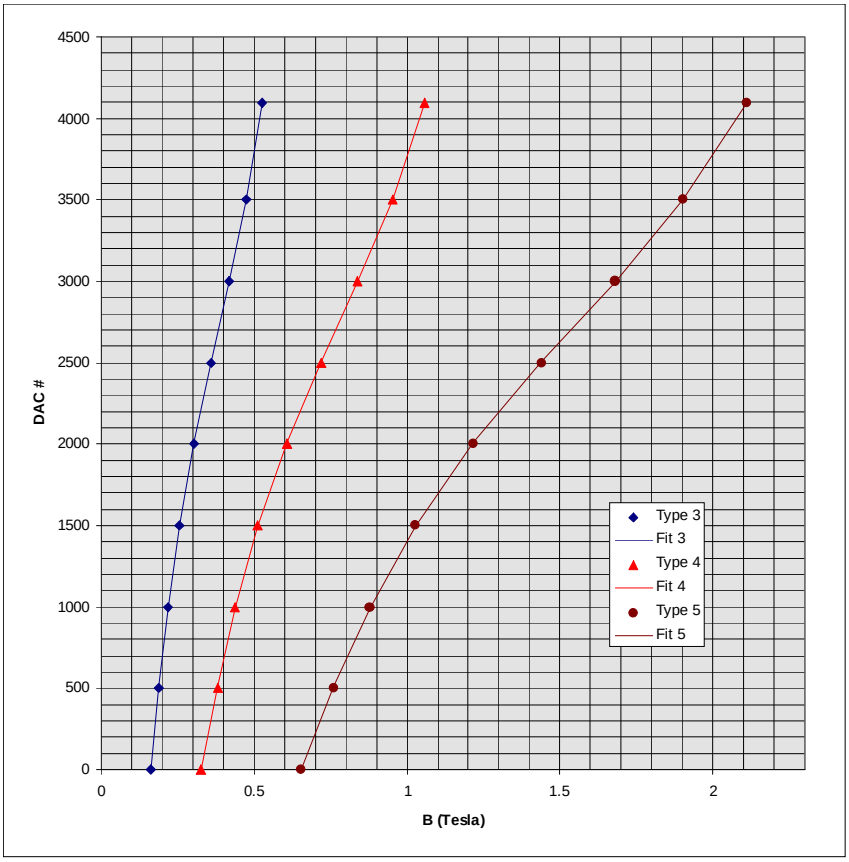

$$DAC = C_0 + C_1 \cdot B + C_2 \cdot B^2 + C_3 \cdot B^3$$

Probe type	C_0	C_1	C_2	C_3	Group 0 Probes	Group 1 Probes
3	-5157.04	45026.48	-95678.57	82559.35	0,3	
4	-5157.39	22514.30	-23920.73	10320.28	1,4	
5	-5156.74	11255.70	-5979.12	1289.79	2,5	

Figure 15.15: DAC Calibration for manual operation of NMR probes.

using the NMR gaussmeter in situations where Autopilot doesn't work or some special supplemental measurements are required.

In principle it is possible to make the field measurements using the SEARCH mode in the Teslameter. In this mode you select a probe and the meter explores the whole field range of the probe until it finds and "locks" on the resonant signal indicating that it has a field measurement. A "lock" is indicated on the controls display by an "L" to the left of the field values. This has the advantage of simplicity but in practice can be time consuming and doesn't always work. The problem being, in situations where there is a lot of noise mixed in with the signal, the circuitry has problems distinguishing the signal from the noise and gets lost before it ever finds a lock. The problem is exacerbated when the field being measured is at the high end of the probe's range. In this case the search starts at the low end and keeps getting hung up on the noise and never gets to the field range of interest. The solution to this problem is to tell the device approximately what field it's looking for and use the AUTO mode to find the lock. In the procedure below that is what we will be doing.

In any case, for "gap probes" (group 0) you must energize and adjust the gradient compensating coils for the field ranges to be measured before trying to make measurement.

For studies involving 10% changes in the field settings the compensating coil current can be set once and left alone.

Recommended Procedure:(turn the **REGULATOR OFF** for all non-autopilot field measurements)

For group 0 probes set compensating coils appropriately (see figures).

Put meter in MANUAL mode with SEARCH OFF

Select a probe **and** polarity (**Group 0: Probes 0, 1, 2 negative;** Probes 3, 4, 5 positive)

Type in DAC number for the field range being measured (see below)

Select AUTO and wait for a lock (positive field reading)

Verify that you have a good lock by checking the oscilloscope for a clear resonant signal.

If you have problems see the table listing problems and possible solutions.

Selecting DAC #'s

In selecting the DAC # to use for the field of interest use either the graph in Figure 15.15 or the polynomial at the bottom of the same figure.

Problems and Solutions

Symptom	Diagnosis and Cure
Weird numbers on displays, controls for all magnets fouled up	Need to reboot. See instructions below.
NMR Teslameter does not respond to commands and display shows all zeros.	Meter's communications are somehow hung up. Push **RESET**.
Will not lock	Very high noise level makes resonance hard to find. Search for the resonance manually by adjusting the DAC in manual mode until you see the resonant signal. (It helps if you know what field you expect so you'll know where to look).
You find resonance manually but still can't get a lock	Check probe polarity. Try decreasing and increasing DAC number by 1. Optimize signal by adjusting compensating coils.
Can't find resonance manually	Try a different probe. Use readings from other probes to tell you where to look for the resonance with the probe that's giving you trouble. Make sure compensating coils are energized properly. Make sure magnet is on.

Table 15.10: NMR: Problems and solutions

Problems	Explanation	Action
NMR not locked but current is changing in the right direction	Normal operation for large field changes	Wait. (see above)
NMR locked but current going in the wrong direction.	Normal operation.	Wait.
NMR locked but field not correct and current not changing	Field regulation is disabled or software is confused.	Check that field regulation is enabled. Enter desired field value or one very near the desired value again.
NMR field display freezes. (Usually but not always shows -#.0000000)	NMR Gaussmeter is not communicating with software.	Push **RESET**.

Table 15.11: NMR troubleshooting

15.5.3 Authorized Personnel

The individuals shown in Table 15.12 are responsible for NMR operation problems.

Name (first,last)	Dept.	Call [4]		e-mail	Comment
		Tel	Pager		
Javier Gomez	JLab	7498	584-	gomez@jlab.org	*Contact*
John LeRose	JLab	7624	584-	lerose@jlab.org	

Table 15.12: NMR: authorized personnel.

15.6 Collimators and Sieve Slits [5] [6]

Both spectrometers have front-end devices for calibrating the optical properties of the spectrometers. These are known as the collimator boxes. These boxes are positioned between the scattering chamber and the first quadrupoles (Q1). Each box is carefully aligned and rigidly attached to the entrance flange of the Q1 of the respective spectrometer. The boxes are part of the vacuum system of the spectrometer. In the septum configuration sieve slits and collimators are installed and removed manually.

Inside each box a ladder is mounted which is guided by a linear bearing and moved up and down by a ball screw. On this ladder 3 positions are available to insert collimators. Below this ladder a special valve is mounted that can isolate the vacuum in the spectrometer from the target system. This valve should be activated when it is moved in front of the holes connecting the box with spectrometer and target chamber. A schematic view of the collimator box is shown in Fig. 15.16.

Vacuum requirement is 10^{-6} Torr. The material for the box is aluminum. It is possible to open one side of the box so that collimators can be exchanged. The reproducibility of collimator positions after moving the ladder and/or after replacing a collimator is better than 0.1 mm in horizontal and vertical direction. The dimensions of the box are roughly height=175 cm , width=35 cm and depth=15 cm. The tolerance in the dimension of the 7 msr collimator hole is $\pm$0.5 mm in each direction. The tolerance in the position of each of the sieve-slit holes is $\pm$0.1 mm in each direction.

A typical sieve slit collimator (shown in Fig. 15.17) consists of a plate of roughly 14 cm x 20 cm containing 49 holes positioned in a regular 7x7 pattern. This slit is made out of 5 mm thick tungsten. The holes have a diameter of 2 mm except for the central one and one positioned off-diagonal which have a diameter of 4 mm. The horizontal distance between the holes is 12.5 mm while the vertical distance is 25.0 mm.

To get the latest information on the dimensions and locations of the collimators see the Hall A homepage on the web[7].

15.6.1 Safety Assessment

The collimator boxes form part of the vacuum system for each spectrometer. All hazards identified in the spectrometer vacuum section apply to the collimator box as well.

In addition, safe access to the top of the collimator boxes is needed during manual operation of the box as outlined below. Due to the proximity of the collimator boxes to the scattering chamber, and Q1 quadrupoles, all necessary safety precautions with regards to vacuum windows, electrical power cables, cryogenic transfer lines, and high magnetic field should be taken. The same precautions also apply to the collimators and sieves in the septum configuration. In that case the sieve and collomators can be considered part

[5] *CVS revision* Id: slit.tex,v 1.7 2008/04/01 16:52:31 lerose Exp

[6] Authors: J.LeRose lerose@jlab.org

[7] http://hallaweb.jlab.org/

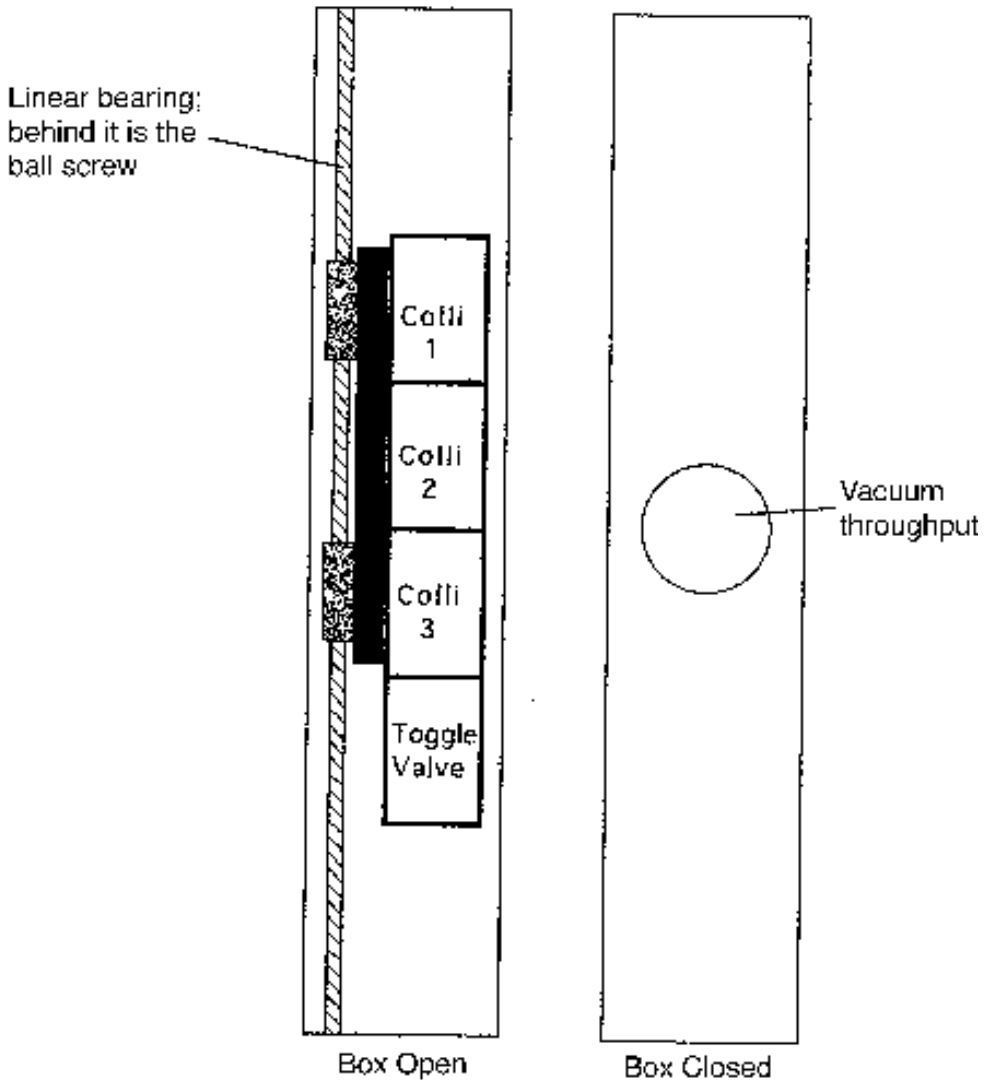

Figure 15.16: Schematic layout of the collimator box.

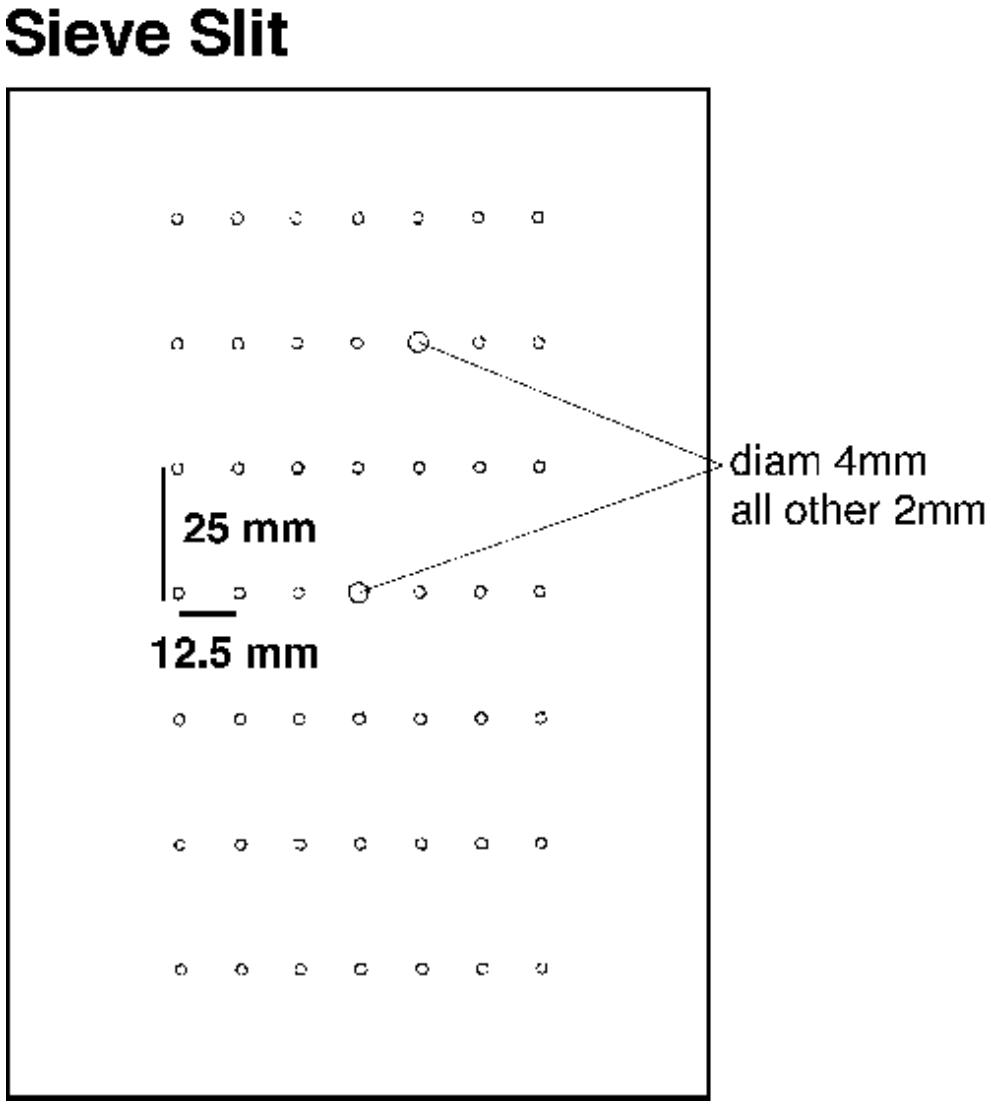

Figure 15.17: Sieve slit collimator for optics calibration.

of the beamline. A survey and appropriate RADCON designated proceedures must be followed when dealing with septum sieves and collimators.

15.6.2 Operating Procedure

Slit position is changed remotely from the standard Hall A control screen. In the case of a spectrometer configuration involving the septum magnets collimators and sieves are changed manually in the Hall.

15.6.3 Authorized Personnel

The authorized personnel is shown in table 15.13.

Name (first,last)	Dept.	Call [4]		e-mail	Comment
		Tel	Pager		
Ed Folts	JLab	7857		folts@jlab.org	Mechanics and vacuum
Javier Gomez	JLab	7498	584-	gomez@jlab.org	Controls

Table 15.13: Collimator: authorized personnel.

15.7 Spectrometer Alignment [8] [9]

At present, the systems implemented to determine the alignment of each spectrometer (roll, vertical angle/pointing and horizontal angle/pointing) without the help of the Accelerator Division Survey group are limited to roll, vertical angle and horizontal angle. All alignment information is displayed in the "ALIGNMENT" mosaic of the Tools MEDM screen (see Fig. 25.4) ("Hall A Menu $--> $ "Tools").

A bi-axial inclinometer is used to determine the roll and vertical angle (also known as pitch) of each spectrometer. These inclinometers are attached to the back of the dipoles at the power supply platform level. The raw inclinometer measurements, in Volts, are displayed as "Tilt X" and "Tilt Y". The inclinometer temperature is also given (" Tilt T"), in degree Celsius. From these values, the "ROLL" and "PITCH" values are calculated Agreement between the inclinometer readings and survey measurements are better than $\pm$ 0.1 mrad over all presently available history.

The horizontal spectrometer angle is determined from floor marks set in place by the survey group. Floor marks have been placed every 0.5 $^\circ$ covering the useful range of both spectrometers. There are two concentric rings of floor marks in the hall. We will concentrate in the inner ring which covers the angular range of both spectrometers. The outer-ring covers only small angular sections but these floor marks are made on metal plates which allow to read them with higher resolution. The inner-ring floor marks are located at a distance of $\sim$10 m from the target center. A ruler attached to each spectrometer dipole runs over the floor marks and it acts as a vernier to interpolate between marks. The location of a given floor mark on the ruler can be viewed from the Hall A Counting House through a TV camera (labeled "Front Camera") . The camera is able to move along the length of the ruler so that any parallax effect can be eliminated. The camera motion is controlled from the "Tools" screen through two push buttons ("FRONT CAMERA" - "MOVE +" and "MOVE –"). Two fields in the "ALIGNMENT" mosaic ("Flr Mrk" and "Vernier") allow to input the values read from the TV monitor. The effective spectrometer angle is then calculated and displayed as "Angle". The application "HRS Floor Marks" calculates the floor mark and vernier value to which the spectrometer should be set to obtain a given angle. Spectrometer horizontal angle surveys and floor mark determinations agree to $\pm$ 0.2 mrad.

[8] *CVS revision* Id: AlignmentOps.tex,v 1.8 2003/12/17 03:59:48 gen Exp

[9] Authors: J.Gomez gomez@jlab.org

15.7.1 Authorized Personnel

The authorized personnel is shown in table 15.14.

Name (first,last)	Dept.	Call [4]		e-mail	Comment
		Tel	Pager		
Javier Gomez	JLab	7498	584-	gomez@jlab.org	*Contact*

Table 15.14: HRS alignment: authorized personnel.

Part V

HRS Detectors

Chapter 16

Overview [1] [2]

16.1 Overview of the Detector Package

The detector packages of the two spectrometers are designed to perform various functions in the characterization of charged particles passing through the spectrometer. These include: providing a trigger to activate the data-acquisition electronics, collecting tracking information (position and direction), precise timing for time-of-flight measurements and coincidence determination, and identification of the scattered particles. The scintillators provide the timing information, as well as the main trigger. The particle identification is obtained from a variety of Cherenkov type detectors (aerogel and gas) and lead-glass shower counters. A pair of VDCs provide tracking information. The main part of the detector package in the two spectrometers (trigger scintillators and VDCs) is identical; the arrangement of particle-identification detectors differs slightly. The HRS-L can be equipped with a focal-plane polarimeter to determine the polarization of detected protons. The focal-plane-polarimeter operates for proton momenta up to 3 GeV/c with a figure-of-merit of 0.03. The side view of the detector stacks are shown in Fig. 16.1.

The optics of the HRS spectrometers, results in a narrow distribution of particle trajectories in the transverse direction, leading to an aspect ratio of the beam envelope of about 20:1 at the beginning of the detector package and 4:1 at the end.

The detector package and all data-acquisition (DAQ) electronics are located inside a Shield Hut (SH) to protect against radiation. The SH is also equipped with air conditioning and fire suppression systems. The individual detectors are installed on a retractable frame, so that they can be moved out of the SH for repair or reconfiguration. The DAQ electronics are mounted on the same frame.

The concept of the VDCs fits well into the scheme of a spectrometer with a small acceptance, allowing a simple tracking analysis algorithm and high efficiency, because multiple tracks are rare. The VDCs are bolted to an aluminum frame which slides on Thomson rails attached to the box beam. Each VDC can be removed from its SH for repair using these Thomson rails. The position of each VDC relative to the box beam

[1] *CVS revision* Id: overview.tex,v 1.12 2005/04/04 22:27:25 gen Exp

[2] Authors: B.B.Wojtsekhowski bogdanw@jlab.org

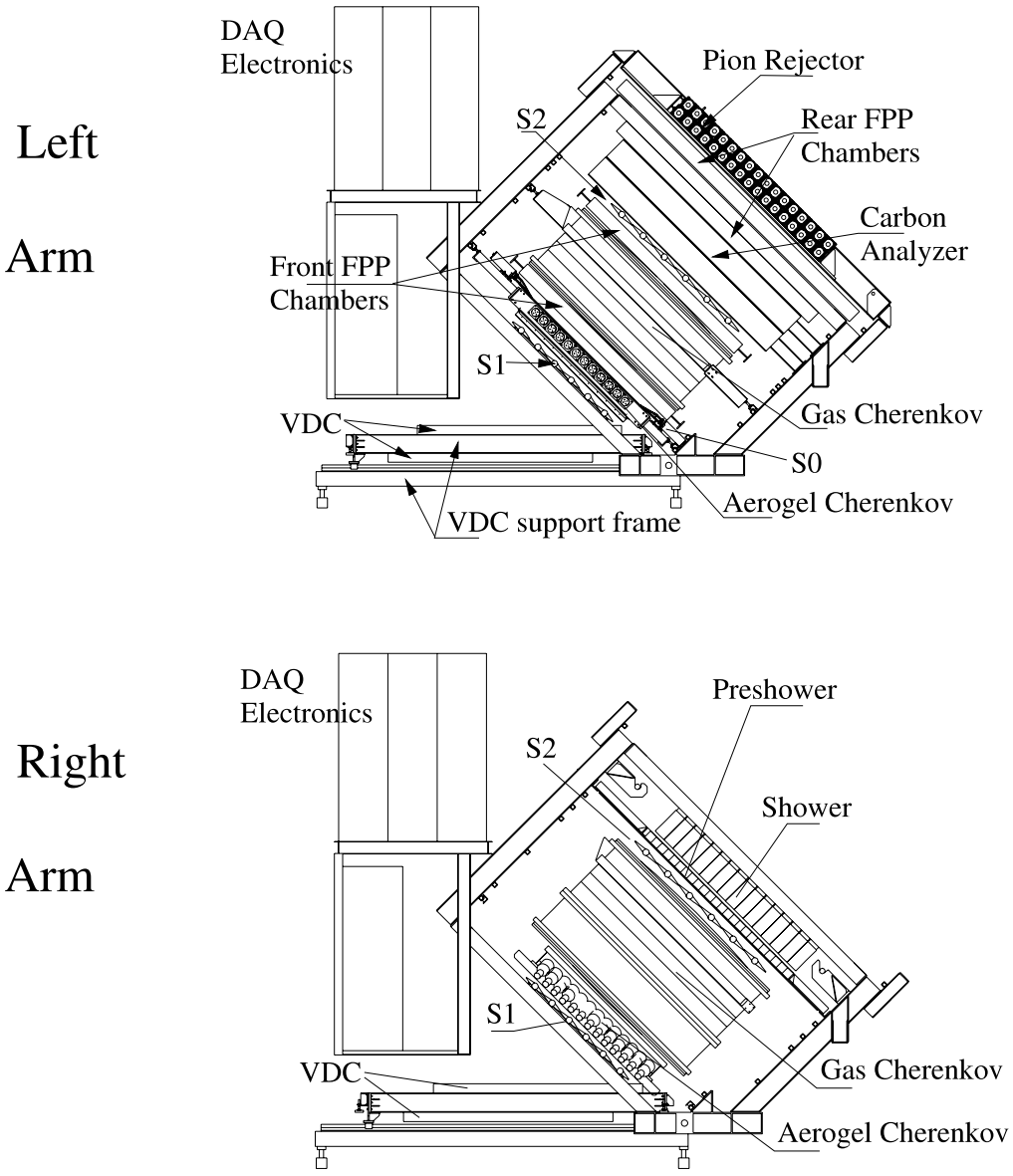

Figure 16.1: The side view of the detector stacks.

can be reproduced to within 100 μm.

There are two primary trigger scintillator planes (S1 and S2), separated by a distance of about 2 m. The long path from the target to the HRS focal plane (25 m) allows accurate particle identification via time-of-flight in coincidence experiments if the accidental rate is low. After correcting for differences in trajectory lengths, a TOF resolution of $\sigma_T \sim 0.5$ ns is obtained. The time-of-flight between the S1 and S2 planes is also used to measure the speed of particles β, with a resolution of 7% (σ).

A gas Cherenkov detector filled with CO_2 at atmospheric pressure is mounted between the trigger scintillator planes S1 and S2. The detector allows an electron identification with 99% efficiency and has a threshold for pions at 4.8 GeV/c. For electrons, the gas Cherenkov detector in the HRS-R has about twelve photoelectrons. In the HRS-L, the gas Cherenkov detector in its standard configuration has a pathlength of 80 cm, yielding seven photoelectrons on average. The total amount of material in the particle path is about 1.4% X_0.

Two layers of shower detectors are installed in each HRS. The blocks in both layers in the HRS-L and in the first layer in the HRS-R are oriented perpendicular to the particle tracks. In the second layer of the HRS-R, the blocks are parallel to the tracks. The front layer in the HRS-R is composed of 48 lead glass blocks, 10 cm by 10 cm by 35 cm. The second layer is composed of 80 lead glass blocks, 15 cm by 15 cm by 35 cm each. The front layer in the HRS-L is composed of 34 lead glass blocks, of dimensions 15 cm by 15 cm by 35 cm. Some blocks are shorter - 30 cm instead of 35 cm. The second layer is composed of 34 similar blocks. Because of its reduced thickness, the resolution in the HRS-L is not as good as that of the shower detector in the HRS-R. The combination of the gas Cherenkov and shower detectors provides a pion suppression factor of $2 \cdot 10^5$ above 2 GeV/c, with a 98% efficiency for electron selection in the HRS-R.

There are three aerogel Cherenkov counters available, with various indices of refraction, which can be installed in either spectrometer and allow the clean separation of pions, kaons and protons over the full momentum range of the HRS spectrometers. The first counter (AM) contains hygroscopic aerogel with an index of refraction of 1.03 and a thickness of 9 cm. The aerogel is continuously flushed with dry CO_2 gas. It is viewed by 26 PMTs (Burle 8854). For high-energy electrons the average number of photo-electrons is about 7.3.

The next two counters (A1 and A2) are diffusion-type aerogel counters. A1 has 24 PMTs (Burle 8854). The 9 cm thick aerogel radiator used in A1 has an index of refraction of 1.015, with a threshold of 2.84 (0.803) GeV/c for kaons (pions). The average number of photo-electrons for GeV electrons in A1 is $\simeq 8$. The A2 counter has 26 PMTs (XP4572B1 made by Photonis). The aerogel in A2 has an index of refraction of 1.055, giving a threshold of 2.84 (0.415) GeV/c for protons (pions). The thickness of the aerogel radiator in A2 is 5 cm, producing an average number of about 30 photo-electrons for GeV electrons.

16.2 Geometry of the Detector Packages

Tables 16.1 and 16.2 give geometry information for the Left arm and Right arm detector packages. The values in the tables indicate the position of the central point of the detector. The origin of coordinate system (0,0,0) is located at the intersection of the mid-plane of the spectrometer and the nominal focal plane ($\sim$ middle of the Bottom VDC). The configurations can be modified to meet experimental needs, for example the short gas Cherenkov counter can be made longer to increase the pion rejection, the two aerogel counters can be installed on one spectrometer, an additional CH2 analyzer for FPP can be added and so on. The locations of the VDC, S1, and shower detectors are fixed, but some of the other detectors can be moved.

detector	location actual	location IDEAS model	width X	width Y	BEAM X(+)	X(−)	ENVELOPE Y
VDC1*	0		1942	271	843	- 824	+/- 57
VDC2*	572		1942	271	932	- 911	+/- 85
S1	1311	1321	1718	356	696	-1022	+/- 163
AERO	1646		199	414	709	- 888	+/- 182
GAS	2535		2200	650	886	-1110	+/- 279
S2	3358	3378	2197	540	897	-1124	+/- 285
preSHOW	3502	3546	2400	700	925	-1158	+/- 301
SHOW2	3780	3912	2400	900	964	-1207	+/- 322

Table 16.1: Locations of the detectors on Right Arm in mm.

detector	location actual	location IDEAS model	width X	width Y	BEAM X(+)	X(−)	ENVELOPE Y
VDC1*		0	1942	271	843	- 824	+/- 57
VDC2*		500	1942	271	932	- 911	+/- 85
S1		1287	1760	360	675	- 845	+/- 163
AERO		1617	1872	414	709	- 888	+/- 182
SC1		1837	1780	480	738	- 924	+/- 198
GAS		2409	2200	650	857	-1073	+/- 263
SC2		2952	2080	640	865	-1083	+/- 268
S2		3141	2220	640	877	-1099	+/- 274
Analyzer		3495	2190	680	916	-1147	+/- 296
SC3		3907	2540	1000	1099	-1343	+/- 457
SC4		4264	3170	1500	1382	-1645	+/- 705

Table 16.2: Locations of the detectors on Left Arm in mm.

Chapter 17

Vertical Drift Chambers [1] [2]

17.1 Overview

The High Resolution Spectrometer Vertical Drift Chambers provide a precise (± 125 μm) measurement of the position and angle of incidence of both recoil electrons (in the HRSe) and knockout protons (in the HRSh) at the respective spectrometer focal planes. This information may be combined with the knowledge of the spectrometer optics to determine the position and angle of the particles in the target.

Each Hall A spectrometer boasts its own VDC detector package. These packages are located on permanent rails mounted on the spectrometer decks in the shielding huts above the outrun windows but beneath the space frames. The packages consist of two VDCs, and are identical in all aspects. The VDCs have been constructed without guard wires. Each VDC is composed of two wire planes in a standard UV configuration - the wires of each plane are oriented at 90° to one another, and each plane is oriented at 45° with respect to the nominal particle trajectories (see Figures 17.1,17.2).

Operation of the VDCs requires the application of both High Voltage (HV) across the chambers themselves and Low Voltage (LV) across the preamp/disc cards, which are mounted on the sides of the VDCs, within the confines of the protective aluminum Faraday cage. The chamber gas is a combination of argon (Ar) and flammable ethane (C_2H_6) which is bubbled through alcohol. Gas is routed from bottles located in the Hall A gas supply shed to gas supply control panels located on the main level of the space frames in the detector huts.

As charged particles pass through the chamber gas in the VDCs, they produce ionization. This ionization drifts along the electric field lines defined by the high voltage planes and the signal wires. Ionization is collected in the form of analog pulses on the signal wires. The pulses are then amplified, discriminated and used to start multihit TDCs, which are subsequently stopped by the overall event trigger. The TDCs are read out by the CODA [20] acquisition software. In-depth data analysis requires the offline software (see Sec. 28.1).

[1] *CVS revision* Id: vdc.tex,v 1.8 2008/04/24 18:52:17 gen Exp

[2] Authors: J.Segal segal@jlab.org

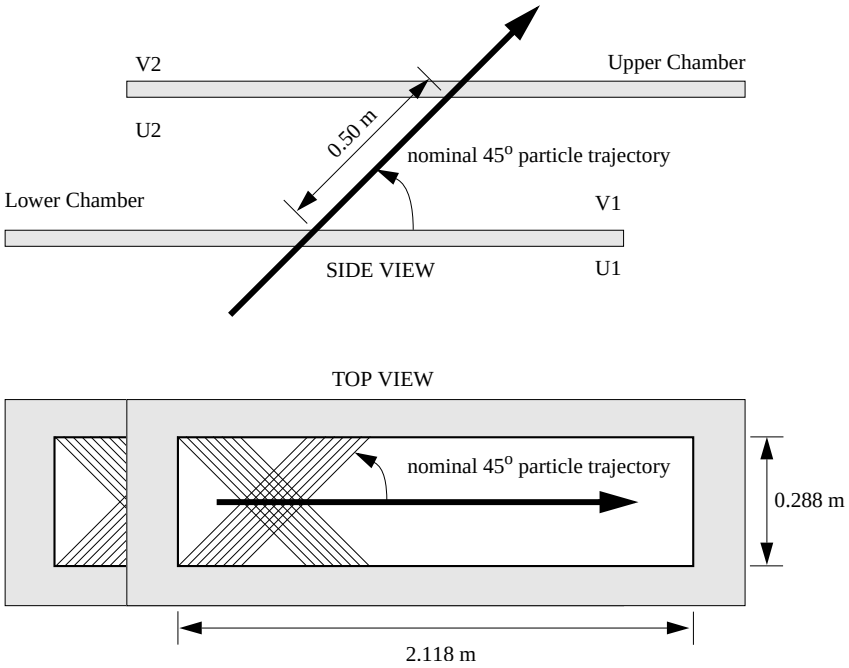

Figure 17.1: Relative VDC geometry

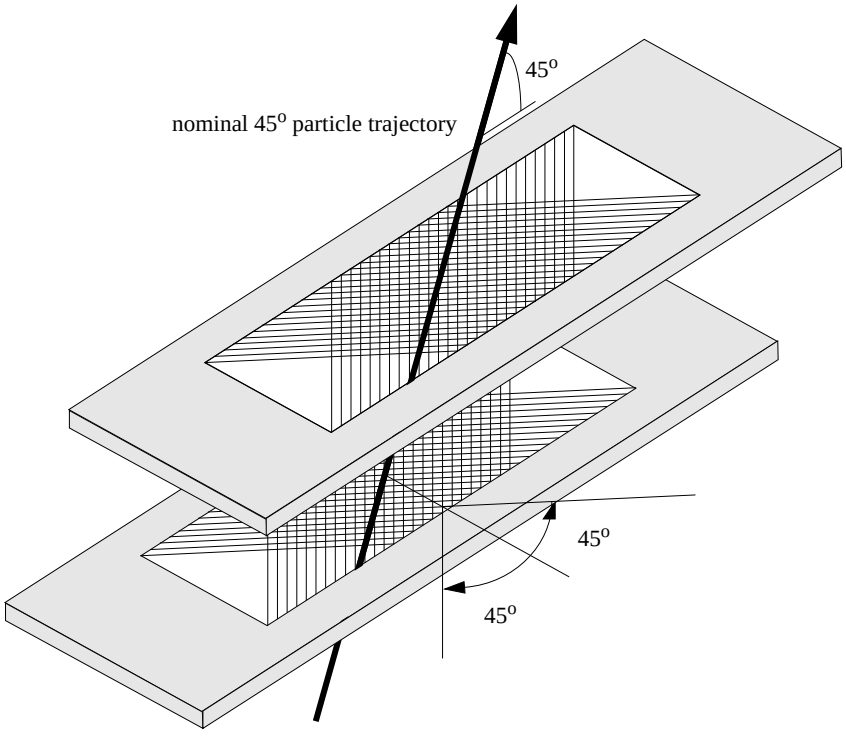

Figure 17.2: Relative VDC geometry

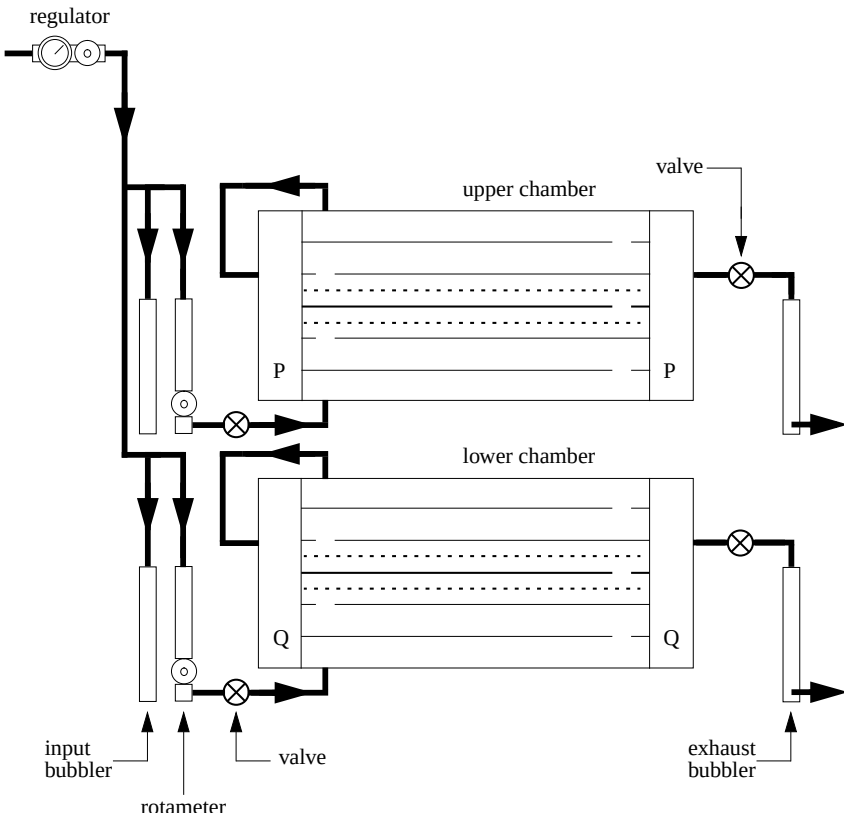

Figure 17.3: Gas flow schematic

17.2 Operating Procedure

Gas Flow Operating Procedures Chamber gas is delivered to a given VDC detector package via HAGS, the Hall A Gas System. Complete details of this system are presented elsewhere in this manual.

Each VDC detector package consists of two VDCs connected in parallel (see Figure 17.3). All gas connections are made using Polyflo^{TM} tubing and Jefferson Lab specified connectors. Gas enters the chamber assembly after bypassing an overpressure bubbler containing 15 mm of (edible) mineral oil. Gas is exhausted from the VDC package through a second bubbler containing 5 mm of mineral oil. Each chamber has a volume of approximately 30 ℓ and is operated slightly above atmospheric pressure. Standard flow rate set points are clearly labeled next to the control panel flow meters. The gas flow through the chambers may be independently varied and is typically set to 7 ℓ/hr. A typical chamber leakage rate measured against the 5-mm mineral oil load is $\leq$ 3 ℓ/hr. The flow rate of 7 ℓ/hr when combined with the leak rate of $\leq$ 3 ℓ/hr ensures a complete exchange of gas in the chambers roughly every 8 hours. When a bottle is nearly empty (say 90%), it should be changed since the quality of the gas at the bottom tends to be low. Gas bottles may only be changed by authorized personnel.

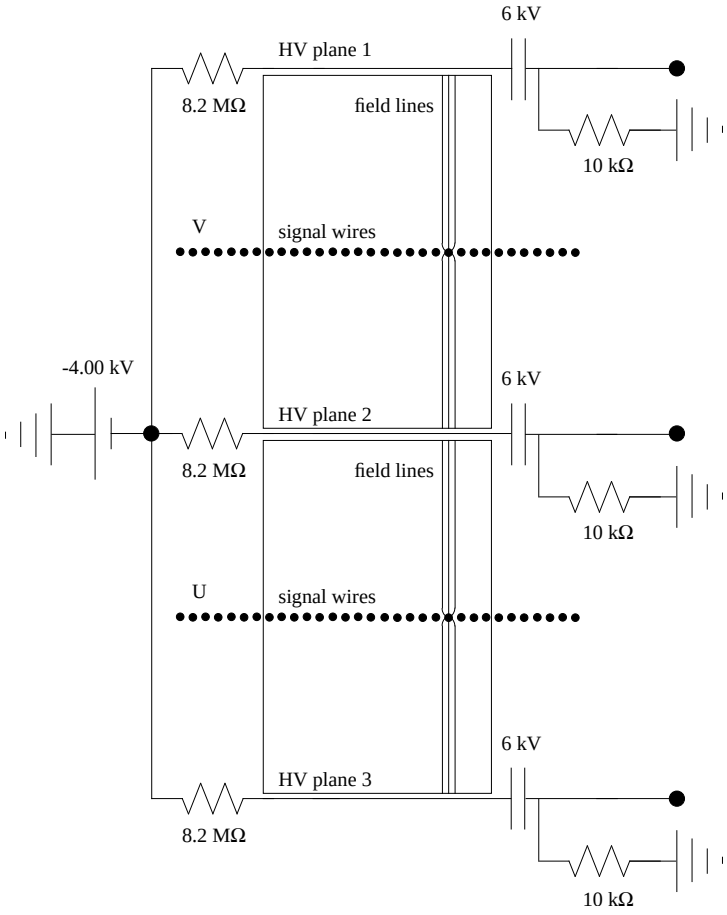

Figure 17.4: VDC overview.

The status of the gas handling system should be monitored carefully every shift. Manual logging is not required as the system status is constantly logged via EPICS [14]. Any substantial deviation from the median parameters can result in a change in the operational parameters of the VDCs and should be immediately investigated. If at all possible, gas flow should be continuously maintained, even in no-beam time periods. This avoids time loss to reconditioning and maintains the desirable steady-state operating condition. Further, it is critical that gas flow has been maintained for 24 hours prior to any power up.

Power Supplies and Electronics Procedures The power supplies and readout electronics associated with the HRS VDCs are all commercially designed. The reader is directed towards the manuals made available by the manufacturer for the detailed information not provided here.

A Bertan 377N HV power supply, modified to allow a remote reset, provides -4.00 kV nominal to each of three HV planes in a given VDC detector package via a 10 MΩ

Hammond splitter box (see Figure 17.4). The power supply is located in the detector hut in a NIM bin on the upper level of the space frame. This unit may be controlled either manually or remotely via the EPICS control software, and also provides a monitor of the current drawn (nominally 70 nA) by the VDCs to which it is attached. Connections from the power supply to the Hammond splitter box, as well as from the Hammond splitter box to the VDCs are made using standard SHV connectors on red RG-59/U cable good to 5 kV.

A Kepco ATE 15-3m discriminator power supply provides +3.0 V (92 cards draw $\leq$ 2 A) and the Kepco ATE 6-100m pre-amp power supply provides $\pm$5 V nominal to the LeCroy 2735DC pre-amp/discriminator cards used to instrument the chambers via a heavy-duty fuse panel. The precise voltages provided are +5.0 V (92 cards draw 22 A) and -5.2 V (92 cards draw 58 A). These LV supplies are located in the detector hut on the main level of the space frame for the HRS_e and on the upper level of the space frame for the HRS_h. Complete connection schematics and instructions for making or breaking the connections are located on the aluminum Faraday cage protective plates covering the respective interface nodes between the power supplies and the VDCs.

Each VDC wire plane consists of 400 20 μm ϕ, Au-plated tungsten wires. The first 16 wires on each end of the wire plane are connected to ground for field-shaping purposes. There are 368 wires per wire plane which act as signal wires. Thus, each spectrometer is instrumented with 1472 channels of LeCroy 1877 multihit Fastbus TDCs. These TDCs are located in a Kinetic Systems F050 Fastbus crate with a BiRa FB8189-4 power supply located on the main level of the spectrometer space frame in the detector hut. The connections between the pre-amp/discriminator cards mounted on the VDCs and the TDCs are made with 34-conductor twisted-pair cables. Clip-on ferrites are used to filter noise. A connection schematic is posted on the side of the rack holding the Fastbus crate on the space frame in the detector hut.

Power-up Procedure

1. ensure gas flow has been established in the chambers as previously outlined. If it has not, *STOP RIGHT HERE!* Gas flow must be well-established and steady-state *BEFORE* the HV may be enabled.

2. Ensure that all power supplies as well as the Fastbus crate are off and then connect the LV, HV, and TDC cables.

3. enable the LV. Set points are clearly labeled on the face of the power supplies. Note that they have overcurrent setpoints, and some fine adjustments over the first 30 minutes after a cold start power-up may be required. Appropriate LEDs should all be active on both the power supplies and the pre-amp/discriminator cards.

4. slowly (steps of no more than -300 V) ramp the HV to its nominal set point of -4.00 kV using either the manual or the remote controls. While the trip current is set to 10 μA, do not allow the chambers to draw more than 1 μA during the ramping procedure or serious damage may result. If the power supply trips during

the ramping procedure, you are moving too fast. Rezero things and begin the procedure again. *NEVER USE THE AUTO-RESET FUNCTION.* If the power supply trips again, *STOP IMMEDIATELY AND INVESTIGATE.*

5. enable the Fastbus crate. Appropriate LEDs should all be active.

6. check for poor signal connections evidenced by hot wires (wires counting extremely fast) or dead wires (wires with no counts) using the histograming software and cosmic rays. Remake any connections as necessary by first powering down the Fastbus crate.

If at all possible, the HV and LV power supplies should be left on continuously if and only if gas is available to the chamber. This avoids time loss to reconditioning and maintains the desirable steady-state operating condition.

17.3 Handling Considerations

The VDCs are very delicate devices which are absolutely essential to the instrumentation of the Hall A spectrometers. Thus, extreme care must be exercised whenever they are moved or used.

- Before moving a VDC detector package, ensure that the protective plates are in position. Plates include tapped aluminum sheets to be bolted over the entrance and exit aperatures, as well as aluminum sheets which slide in between the two chambers.

- Disconnect and reconnect all TDC cables with extreme care. The conductor pins are relatively fragile, and should one be broken off, repair will be *extremely* difficult.

- When initiating gas flow, pay strict attention to the feedback parameters. Over-pressure may damage the chambers.

- Never attempt to apply HV to the chambers until gas flow conditions have reached steady-state.

- As the amount of heat generated by the pre-amp/discriminator cards it substantial, always make sure adequate cooling is provided before attempting to run. This cooling takes the form of four 12VDC fans mounted in the aluminum Faraday cage.

- When ramping the HV, never allow the chambers to draw more than 1 μA instantaneously. If they do, something is wrong!

17.4 Other Documentation

See the URL[3].

17.5 Safety Assessment

The following potential hazards have been clearly identified.

The High Voltage System The Bertan 377N HV low current power supply provides a nominal -4.00 kV. Red HV RG-59/U cable good to 5 kV with standard SHV connectors is used to connect the power supply to a Hammond splitter box, and then to connect the splitter box to each of the three high voltage planes in a given VDC. A given chamber draws a current from 50-100 nA.

The Low Voltage System Kepco LV power supplies are used for the the LeCroy 2735DC pre-amp/discriminator cards. Each card (23 per chamber) requires +5.0 V (92 cards draw 22 A), -5.2 V (92 cards draw 58 A) and +3.0 V (92 cards draw $\leq$ 2 A).

Explosive Gas The Ar C_2H_6 chamber gas is explosive and must be handled accordingly. Further, gas flow should be maintained for at least 24 hours prior to the enabling of HV.

High Pressure Gas Bottles The gas used in the chambers is supplied in high pressure ($\geq$ 2000 psi) gas bottles. This confined high pressure gas represents a tremendous (potentially lethal) amount of stored energy.

17.6 Authorized Personnel

The individuals responsible for the operation of the VDC are shown in Table 17.1.

Name (first,last)	Dept.	Call [4]		e-mail	Comment
		Tel	Pager		
Jack Segal	JLab	7242		segal@jlab.org	*Contact*
Bogdan Wojtsekhowski	JLab	7191	584-	bogdanw@jlab.org	

Table 17.1: VDC: authorized personnel.

[3] http://www.jlab.org/~fissum/vdcs.html

Chapter 18

Trigger Scintillator Counters [1] [2]

18.1 Overview

In the standard detector configuration each HRS has two trigger scintillator planes, S1 and S2. The paddles in each plane are arranged to provide segmentation along the detector-x direction. An additional un-segmented scintillator plane, S0, can optionally be inserted into the detector stack for experiments that require a high hadron trigger efficiency. Fast signals from these planes are used to form the trigger, as well as providing timing information useful for particle identification. Typically a coincidence between two-or-more scintillator planes is used to form the trigger, and through different combinations the triggering effiency of each plane can be measured.

The S1 scintillator plane consists of six paddles, each with an active area of 29.5 cm by 35.5 cm. The counters are made of 5 mm thick BICRON 408 plastic scintillator and use multi-strip adiabatic light guides which end in a long cylindrical spool. There is an inlet for optical fiber mounted on the side of the cylindrical light guide. Each paddle is viewed by a 2" photo multiplier tube (Burle 8575) on each end. The S1 paddles are installed at a small angle to the S1-plane and overlap by 10 mm. The detectors are clamped to the detector frame through an additional A1 channel, and supported from the PMT housings. Figure 18.1 shows the mounting scheme for S1. Signals from the PMTs are sent to Camac modules on the second level of the shielding hut for processing.

The S2 plane (also called S2m) consists of sixteen bars mounted on a steel frame, as shown in Figure 18.2. The bars are made a fast plastic scintillator (EJ-230) with dimensions of 17 in by 5.5 in by 2 in thick. Since the S2 detector is located after the tracking and PID detectors in the HRS, the extra material does not compromise the particle detection while providing a greater photon yield for an improved timing resolution as compared to S1. The bars are individually wrapped with 25 μm of mylar and 50 μm of black tedlar. The bars do not overlap, but are pressed together by a force 60 lbs to minimize the dead area between adjacent bars. Trapezoidal lucite light guides on both ends couple the bar to 2" photo multiplier tubes (Photonis XP2282B). S2 is assembled

[1] *CVS revision* Id: scin.tex,v 1.11 2005/04/04 22:27:25 gen Exp

[2] Authors: Robert Feuerbach feuerbac@jlab.org, Bogdan Wojtsekhowski bogdanw@jlab.org

Figure 18.1: S1 mounting

on a sub-frame mounted on rails in the detector frame. The bars are supported by two thin aluminimum honeycomb panels placed over the scintillators, leaving the PMTs and bases accessible for servicing. On the frame are mounted analog splitters and threshold discriminators for the initial signal processing.

The optional S0 plane is made of 10 mm thick BICRON 408 plastic scintillator with an active area 170 cm long by 25 cm wide. This area is covered by a single paddle, viewed from each end by 3" PMTs (XP4312B). The signals from these PMTs are sent to Camac modules on the second level of the shielding hut for processing.

18.2 PMT regime and time resolution

High energy electrons passing perpendicular to the S1 detector plane yield about 400-500 photons at the photo cathode of each PMT. In a fresh PMT this leads to 80-100 photo electrons. On the HRS the discriminators have a threshold of 45 mV and a typical PMT has gain $3*10^6$. The HV for a fresh PMT should be in the range -1800 to -2000 V. Based on PMT pulse rise time (2.8 ns) and photo electron statistics the time resolution for the counter is about $\sigma_t \approx 0.2\,\mathrm{ns}$. The propagation time of the light inside the detector is about 10 ns, which needs to be corrected by using track position information.

Due to its thicker cross-section, the initial photon yield in S2 is larger than in S1. With cosmic rays around 900 photo electrons per PMT were observed. To match the gains, the HV on the PMTs were adjusted, and set between -1700 and -2000 V. The signals from each PMT are sent to a passive 90/10% splitter, with the greater and lesser portions sent to the on-frame discriminator and Fastbus ADCs,respectively. The discriminator is

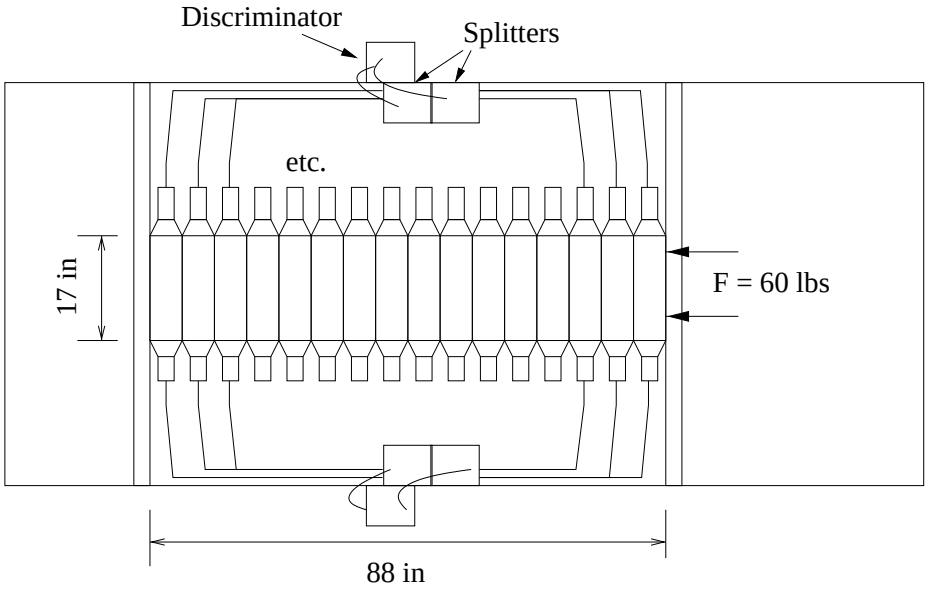

Figure 18.2: The layout on the frame of the S2 paddles and electronics.

a Phillips-Scientific model 706 with the threshold set at 10mV. Both NIM outputs are used on each channel, with one line as input for the trigger-logic and the other going to a TDC after passing through a NIM-ECL converter and a delay of some 880ns. The average resulting timing resolution for a single PMT was measured to be better than $\sigma_{pmt} < 150\,\text{ps}$.

The geometry of S0 counter limits its timing resolution. In 1999 the resolution was measured to be $\sigma_t \approx .2\,\text{ns}$.

LeCroy HV 1460 modules are used to supply HV power for the trigger counters. The HV can be controlled from a VT100 terminal connected through a terminal server or through the EPICS [14] system based on the HAC computer. Current HV settings for the trigger counters should be found from a printout of the EPICS control in the last experimental logbook.

Figures 18.3 and 18.4 give examples which are included for guidance only. The settings used in the plots may be not correct.

18.3 PMT operation monitoring

There are two ways to monitor PMT/detector performance. The first is based on a scaler display program which provides information about PMT counting rates and coincidence counting rates. A large variation of the rates between paddles is an indication of a possible problem. The second technique is to track the average amplitudes of each PMT for good track events after a complete event reconstruction. For high efficiency of the trigger it is

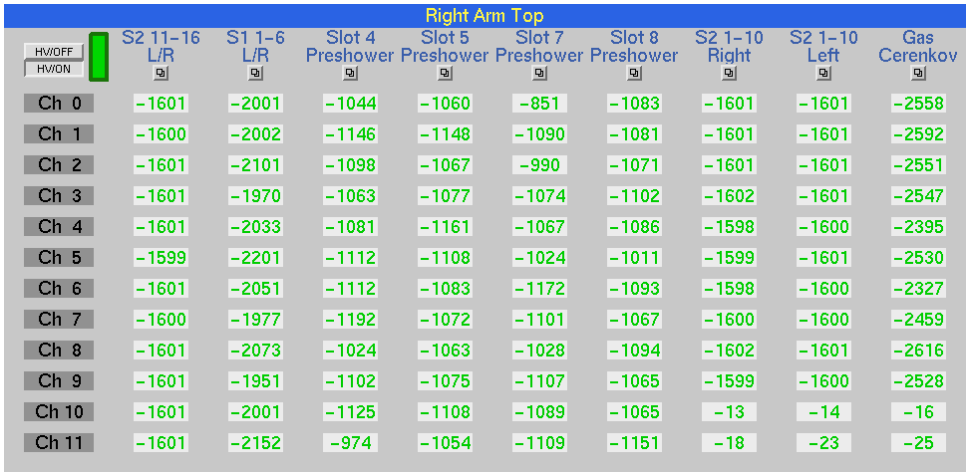

Right Arm Top

HV/OFF HV/ON	S2 11–16 L/R	S1 1–6 L/R	Slot 4 Preshower	Slot 5 Preshower	Slot 7 Preshower	Slot 8 Preshower	S2 1–10 Right	S2 1–10 Left	Gas Cerenkov
Ch 0	−1601	−2001	−1044	−1060	−851	−1083	−1601	−1601	−2558
Ch 1	−1600	−2002	−1146	−1148	−1090	−1081	−1601	−1601	−2592
Ch 2	−1601	−2101	−1098	−1067	−990	−1071	−1601	−1601	−2551
Ch 3	−1601	−1970	−1063	−1077	−1074	−1102	−1602	−1601	−2547
Ch 4	−1601	−2033	−1081	−1161	−1067	−1086	−1598	−1600	−2395
Ch 5	−1599	−2201	−1112	−1108	−1024	−1011	−1599	−1601	−2530
Ch 6	−1601	−2051	−1112	−1083	−1172	−1093	−1598	−1600	−2327
Ch 7	−1600	−1977	−1192	−1072	−1101	−1067	−1600	−1600	−2459
Ch 8	−1601	−2073	−1024	−1063	−1028	−1094	−1602	−1601	−2616
Ch 9	−1601	−1951	−1102	−1075	−1107	−1065	−1599	−1600	−2528
Ch 10	−1601	−2001	−1125	−1108	−1089	−1065	−13	−14	−16
Ch 11	−1601	−2152	−974	−1054	−1109	−1151	−18	−23	−25

Figure 18.3: EPICS HV HRSR summary screen.

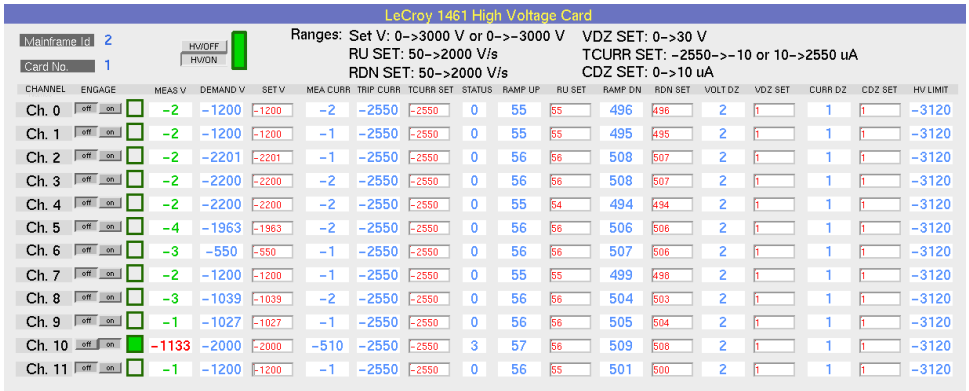

LeCroy 1461 High Voltage Card

Mainframe Id. 2
Card No. 1
HV/OFF HV/ON

Ranges: Set V: 0–>3000 V or 0–>−3000 V
RU SET: 50–>2000 V/s
RDN SET: 50–>2000 V/s
VDZ SET: 0–>30 V
TCURR SET: −2550–>−10 or 10–>2550 uA
CDZ SET: 0–>10 uA

CHANNEL	ENGAGE	MEAS V	DEMAND V	SET V	MEA CURR	TRIP CURR	TCURR SET	STATUS	RAMP UP	RU SET	RAMP DN	RDN SET	VOLT DZ	VDZ SET	CURR DZ	CDZ SET	HV LIMIT
Ch. 0	off on	−2	−1200	−1200	−2	−2550	−2550	0	55	55	496	496	2	1	1	1	−3120
Ch. 1	off on	−2	−1200	−1200	−1	−2550	−2550	0	55	55	495	495	2	1	1	1	−3120
Ch. 2	off on	−2	−2201	−2201	−1	−2550	−2550	0	56	56	508	507	2	1	1	1	−3120
Ch. 3	off on	−2	−2200	−2200	−2	−2550	−2550	0	56	56	508	507	2	1	1	1	−3120
Ch. 4	off on	−2	−2200	−2200	−2	−2550	−2550	0	55	54	494	494	2	1	1	1	−3120
Ch. 5	off on	−4	−1963	−1963	−2	−2550	−2550	0	56	56	506	506	2	1	1	1	−3120
Ch. 6	off on	−3	−550	−550	−1	−2550	−2550	0	56	56	507	506	2	1	1	1	−3120
Ch. 7	off on	−2	−1200	−1200	−1	−2550	−2550	0	55	55	499	498	2	1	1	1	−3120
Ch. 8	off on	−3	−1039	−1039	−2	−2550	−2550	0	56	56	504	503	2	1	1	1	−3120
Ch. 9	off on	−1	−1027	−1027	−1	−2550	−2550	0	56	56	505	504	2	1	1	1	−3120
Ch. 10	off on	−1133	−2000	−2000	−510	−2550	−2550	3	57	56	509	508	2	1	1	1	−3120
Ch. 11	off on	−1	−1200	−1200	−1	−2550	−2550	0	56	55	501	500	2	1	1	1	−3120

Figure 18.4: HV screen for a single card.

important to keep the average amplitude for the S1 PMTs above 600 channels. Due to the passive splitting, the S2 amplitudes should be expected to be only about 50 channels above the pedestal.

18.4 Measures to Protect the PMTs from Helium

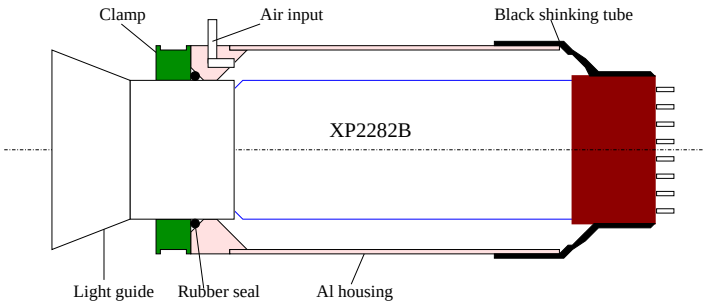

Figure 18.5: Details of the PMT Housing for S2.

There has been found in the past large He concentrations in Hall A, which can lead to a dramatic reduction in the PMT lifetime. To mitigate this problem, each PMT for S0, S1 and S2 is enclosed in a hermetic housing. Air from outdoors is supplied to the housing at a slight over-pressure. Figure 18.5 shows a schematic of the housings used for the S2 PMTs.

18.5 2" PMT Bases for S1 Trigger Counters

A schematic diagram of the 2" PMT Base is shown in Figure 18.6. The Base consists of three main components. These are the front tubular housing (06), which encloses the PMT, part of the scintillator counter's light guide (01), and the mu-metal shield (10). The actual base with the socket and the dynode chain is a separate part, actually an assembly of parts (09-19). The rear tubular housing (07) completes the assembly and encloses the dynode chain and wiring. The three main sections join at the coupling nut (14), which threads partly inside the front tubular housing, while the rear tubular housing threads on the remaining part.

The PMT and the electronic amplification components are mounted on a P.C. board (15) which is enclosed in an aluminum Faraday cage. This assures rigidity and protection from stray RF fields. The mu-metal shield is at cathode potential to minimize the dark current due to capacitive discharge in the photo cathode glass window.

The Electronic Amplification Chain The arrangement of the resistor dynode chain is shown in Figure 18.7. The cathode is connected to the mu-metal shield through a 10

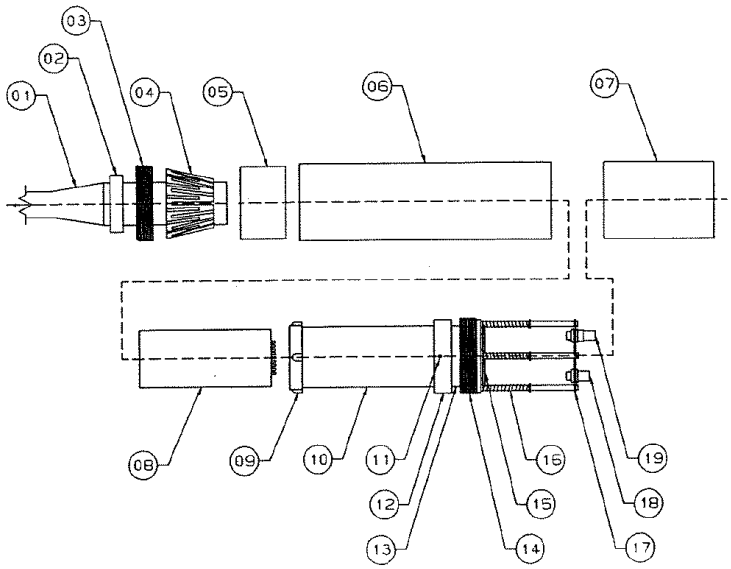

Figure 18.6: The 2" PMT base used in S1 trigger scintillators.

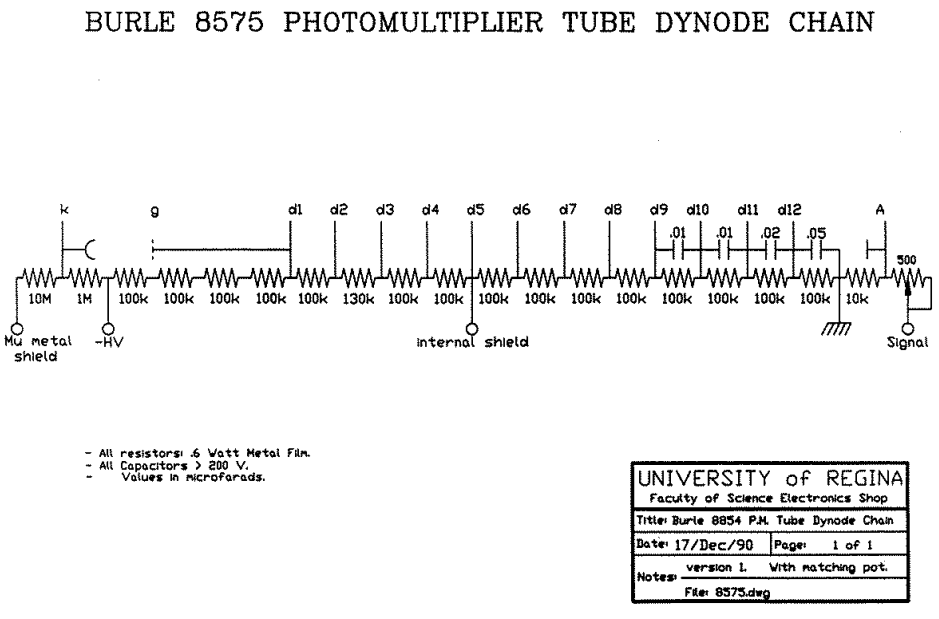

Figure 18.7: The 2" PMT base used in the S1 trigger scintillators.

MΩ resistor, in addition to the 1 MΩ resistor between the cathode and the negative HV. The dynode chain incorporates an adjustable potentiometer (0-500 Ω) to allow a match between the PMT and the external load, in order to eliminate after-pulse ringing. This potentiometer should be adjusted at first to 250 Ω and then make fine adjustments as needed by observing the anode pulses on the oscilloscope for critical matching. It is not advisable to do the adjustments with HV on. Instead, the process should be done with HV off; remove the rear tubular housing, adjust the potentiometer, replace the rear housing, and then turn the HV on again. Iterate until the matching is accomplished. In addition to the obvious safety concerns, one does not want to remove the light sealing rear housing from an active PMT and induce a large light leak which could destroy the PMT.

The bases have been extensively tested under beam conditions. They have several safety related features but these cannot protect anyone who is bent on violating operating procedures and common sense. They allow the removal of the PMT/Base assembly, for repairs of the electronics or replacement of a PMT, without decoupling the housing and collets from the light guide. Thus, replacement of PMTs can be done in minutes without the need to remove the scintillator counters from their subframes.

18.6 Safety Assessment

WARNING: The bases are high voltage devices: the high voltage should be turned off before handling.

The maximum (negative) voltage for both the PMTs and dynode chain is 3 kV. In actual use, however, there should be no need to exceed the 1.8-2.1 kV operating parameters, since both PMTs and dynode chain have high gain. Nevertheless, the bases are high voltage devices and care should be exercised during handling and setup. The external aluminum parts, the front and rear housing, and the back plate (17), are all grounded via the ground of the BNC (18) and SHV (19) connectors. Since the back plate is connected to the coupling nut via the three steel posts, the front plate is also grounded via the coupling nut and the back plate. Common sense, however, dictates that the bases are not to be handled while under high voltage, even when multiple grounding connections are provided.

The mu-metal shield is also under high voltage, since it is connected to the cathode. Electrical isolation between the mu-metal shield and the front tubular housing is assured by the high dielectric retainer ring (12) and the plastic insulator (09) at the free end of the mu-metal shield. The air gap between the mu-metal shield and the front tubular housing is 6 mm, thus the breakdown value (18 kV) far exceeds the maximum 3.0 kV of the PMT.

In the event that the mu-metal shield is inserted without the plastic insulator ring, or someone decides to operate the base without the outside housings, the 11 MΩ resistors between the -HV and the mu-metal shield will restrict the current flow through the mu-metal shield (and the person's hands) to less than 0.2 mA with 2.1 kV on the base.

18.7 Authorized Personnel

The individuals responsible for the operation of the trigger counters are shown in Table 18.1.

Name (first,last)	Dept.	Call [4]		e-mail	Comment
		Tel	Pager		
Bogdan Wojtsekhowski	JLab	7191	584-	bogdanw@jlab.org	*Contact*
Jack Segal	JLab	7242		segal@jlab.org	

Table 18.1: Trigger counters: authorized personnel.

Chapter 19

Gas Cherenkov Counters [1] [2]

A gas Cherenkov detector filled with CO_2 at atmospheric pressure is mounted between the trigger scintillator planes S1 and S2. The detector has an electron identification efficiency of 99% and a threshold for pions of 4.8 GeV/c. The detector has ten spherical mirrors with 80 cm focal length, each viewed by a PMT (Burle 8854); the light-weight mirrors were developed at INFN. The focusing of the Cherenkov ring onto a small area of the PMT photo-cathode leads to a high current-density near the anode. To prevent a non-linear PMT response, even in the case of few photoelectrons, requires a progressive HV divider. The length of the particle path in the gas radiator is 130 cm for the gas Cherenkov in the HRS-R, leading to an average of about twelve photoelectrons. In the HRS-L, the gas Cherenkov detector in its standard configuration has a path length of 80 cm, yielding seven photoelectrons on average. The total amount of material in the particle path is about 1.4% X_0.

19.1 Concept of the design

Two similar threshold gas Cherenkov counters have been constructed as a part of the particle identification equipment to be included in the focal plane detector package of the High Resolution Spectrometers (HRS) in the TJNAF experimental Hall A (see Fig. 19.1). Each counter's housing is made of steel with thin entry and exit windows made of Tedlar^{TM}. Light-weight spherical mirrors have also been built, resulting in a very thin total thickness traversed by particles.

These two counters have identical sections but different lengths of the gas radiator, 80 cm for the left arm and 130 cm for the right arm. There is an additional section 50 cm long which can be attached to the short counter if needed. Each Cherenkov is made of 10 tubes (PMT) and 10 spherical mirrors. Each mirror has a rectangular shape, the radius of a curvature of the reflective surface is 80 cm. The mirror is 1 cm thick, it is built of a very light honeycomb structure, which consists of the following materials: the MgF_2

[1] *CVS revision* Id: gas-cer.tex,v 1.6 2005/04/04 22:27:25 gen Exp

[2] Author: B. B. Wojtsekhowski bogdanw@jlab.org

Figure 19.1: Gas Cherenkov counter.

layer, which protects the aluminum; the aluminum, which assures the reflectivity; the plexiglas, which assures a good surface; and a sandwich backing (carbon-epoxy, phenolic honey comb, carbon epoxy), which assures the rigidity of the mirror.

The 10 mirrors are placed just before the output window and are grouped in two columns of 5 mirrors. Each mirror reflects the light on a PMT placed at the side of the box. The mirrors of the same column are identical and the two columns are almost symmetrical. The positions and angles of the PMTs are not placed regularly, as like the mirrors, but were adjusted by an optical study in order to maximize the collection of light coming from the particular envelope of particles to be detected. The PMTs are fixed and mirrors orientation can be adjusted by hand.

The alignment procedure uses a small light source located about 820 cm from the mirror plane on the symmetry axis of the counter. The pictures in figs 19.2 and 19.3 show the image of the small light source on the PMT photo-cathodes during the mirror alignment procedure.

The five photomultiplier tubes are fixed to the two side walls. Each one is surrounded by high magnetic-permeability shielding (mu-metal). The fixing provides high voltage insulation between the PMT and the steel vessel. A set of optical fibers provides light pulses to each PMT for their calibration.

19.2 Safety Assessment

The PMTs are under high voltage and care is required when handling any components of the counter. The body of the Cherenkov counter must be grounded.

19.3 Operating Procedure

Operating Voltage The operating voltage on the PMTs is about -2,500 V. The voltage must be set to zero before the HV cable will be connected or disconnected from HV divider. The HV cables must be disconnected from all HV dividers before the replacement of any PMT on the gas Cherenkov counter.

The high voltage has to be adjusted in order to have the position of the photoelectron peak for each PMT at the same place, which is around 100 channels above the pedestal. For a good PMT the noise counting rate should not exceed 10 kHz. Past experience shows that PMTs need to be replaced on average every three years due to aging. Such a short life-time is about 3-4 times less than normal, due to He content in Hall A, which leads to a loss of the PMT's quantum efficiency.

19.4 Responsible Personnel

The individuals responsible for the operation of the gas Cherenkov counters are given in Table 19.1.

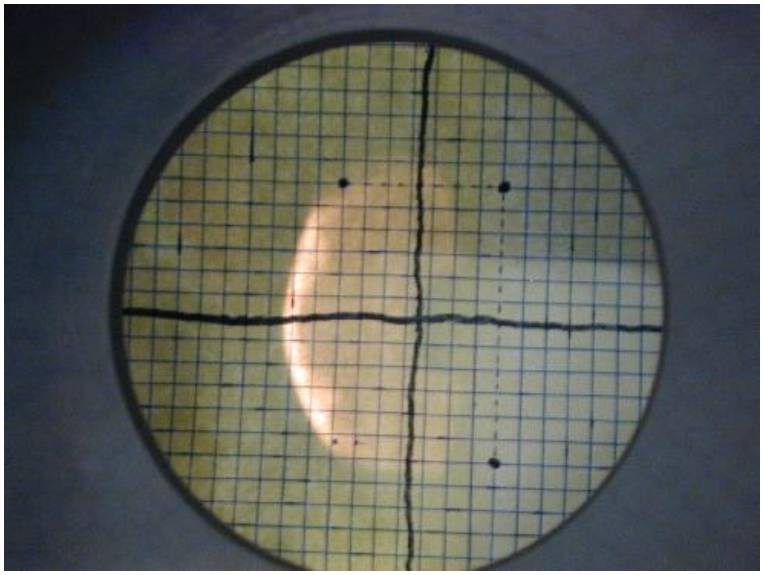

Figure 19.2: The image from the mirror #1 on the PMT photo-cathode.

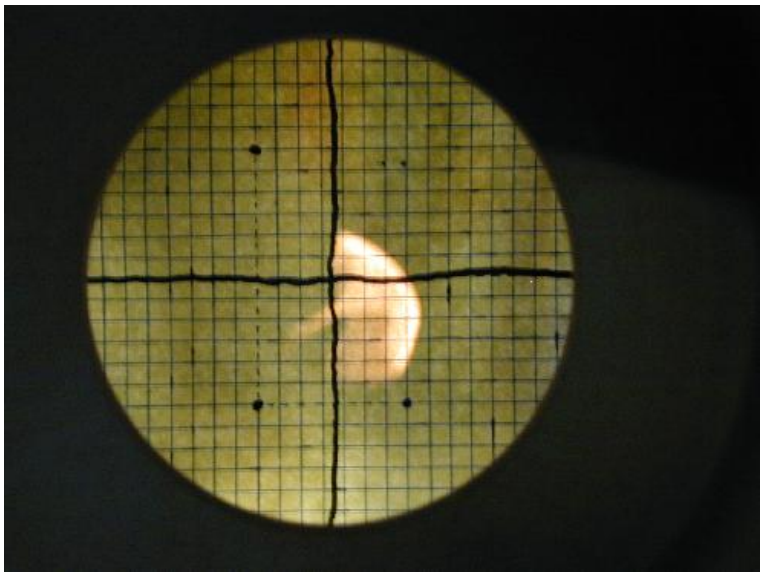

Figure 19.3: The image from the mirror #6 on the PMT photo-cathode.

Name (first,last)	Dept.	Call [4]		e-mail	Comment
		Tel	Pager		
Bogdan Wojtsekhowski	JLab	7191	584-	bogdanw@jlab.org	*Contact*
Jack Segal	JLab	7242		segal@jlab.org	

Table 19.1: Gas-Cherenkov: authorized personnel.

Chapter 20

Electromagnetic Calorimeters [1] [2]

20.1 Purpose and Layout

Electromagnetic calorimeters, or shower detectors, provide very good particle identification (PID), separating electrons from hadrons or muons [29], [30]. The electron's energy is fully absorbed in a shower detector. For a typical shower detector thickness, about 20% of hadrons pass through it without interaction, releasing only the ionization energy. The other 80% interact strongly in the detector. Still, many particles carrying a large fraction of the initial energy escape from the detector. For electromagnetic showers, the energy-release density peaks at a detector depth of about 5 radiation lengths (the full detector depth is about 20 radiation lengths), while the energy release of other particles is more evenly distributed along the depth. Therefore, two factors are used for PID:

1. the ratio of the shower's energy to the particle's momentum;
2. the longitudinal shower profile.

The HRS spectrometers are equipped with 2-layer segmented shower detectors (see Fig. 20.1) built of lead glass.

A photo in Fig. 20.2 shows the HRS-R first layer ("pre-shower") detector installed, while the second layer ("shower") detector was removed.

The particle identification parameter R_{sh} is defined in Eq. 20.1 as:

$$R_{sh} = \frac{E_{tot}}{p} \times \frac{\ln(E_{presh})}{\ln(E_{ave})} \tag{20.1}$$

where E_{tot} is the total energy deposited in the shower detector, p the particle's momentum, E_{presh} the energy deposited in the front layer and E_{ave} the average energy deposited by an electron with momentum p.

[1] *CVS revision* Id: shower.tex,v 1.8 2008/04/28 15:51:05 gen Exp

[2] Authors: E.Chudakov gen@jlab.org

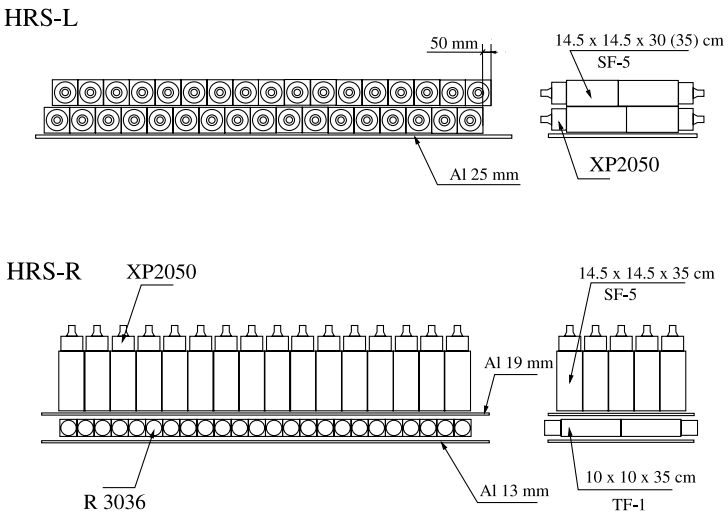

Figure 20.1: Schematic layout of part of the shower detectors in the HRS-L (top) and HRS-R (bottom). Particles enter from the bottom of the figure.

20.2 Description of Components

20.2.1 Detectors

The detector components are summarized in Table 20.1. Because of its reduced thickness,

HRS	layer	historic name	# of blocks	cols ×rows	Sizes, cm X	Y	Z	glass	PM type
L	1	pion rejector 1	34	2×17	14.7	35.0	14.7	SF5	XP3540B$^{(c)}$
L	2	pion rejector 2	34	2×17	14.7	35.0	14.7	SF5	XP3540B$^{(c)}$
R	1	pre-shower	48	2×24	10.0	35.0	10.0	TF1	XP5312B$^{(b)}$
R	2	shower	75	5×15	15.0	15.0	32.5	SF5	XP3530B$^{(a)}$

Table 20.1: The number and sizes of the lead glass blocks used in the shower detectors of the HRS. "X" denotes the dispersive plane of the HRS, while "Z" is along the average particle direction, perpendicular to the focal plane. Some of the large blocks are 30 cm long, instead of 35 cm. The photo-multiplier tubes were from: (a) - Photonis [31], a 130 mm tube, they have been replaced by (c) Photonis XP3540B [31]; (b) - Photonis [31]; (c) Photonis [31].

the resolution in the HRS-L is not as good as that of the shower detector in the HRS-R.

The High Voltage is controlled via EPICS [14] and the Hall A MEDM [18] (see Chapter 25). The MEDM windows and the voltages are shown in Figs. 20.3, 20.4 and 20.5.

Figure 20.2: HRS-R first layer ("pre-shower") detector installed, while the second layer ("shower") detector was removed.

Right Arm Top

HV/OFF HV/ON	S1/S2 Left	S1/S2 Right	Slot 4 Preshower	Slot 5 Preshower	Slot 7 Preshower	Slot 8 Preshower	Aerogel Cerenkov	Aerogel Cerenkov	Gas Cerenkov
Ch 0	-2001	-2051	-1044	-1060	-852	-1083	-21	-20	-2401
Ch 1	-2000	-1977	-1147	-1148	-1090	-1081	-19	-19	-2427
Ch 2	-2101	-2071	-1098	-1067	-989	-1071	-18	-23	-2401
Ch 3	-1972	-1950	-1063	-1077	-1073	-1570	-16	-20	-2501
Ch 4	-2031	-2003	-1081	-1161	-1067	-1086	-18	-27	-2401
Ch 5	-2201	-2151	-1112	-1108	-1024	-1011	-20	-22	-2500
Ch 6	-2051	-1971	-1112	-1083	-1171	-1093	-20	-29	-2351
Ch 7	-1851	-1952	-1192	-1072	-1571	-1068	-21	-24	-2451
Ch 8	-1941	-2051	-1025	-1063	-1028	-1095	-18	-24	-2551
Ch 9	-1901	-2002	-1102	-1075	-1107	-1065	-19	-24	-2501
Ch 10	-2021	-2021	-1125	-1108	-1088	-1065	-20	-23	-16
Ch 11	-2101	-2022	-974	-1053	-1109	-1001	-18	-22	-25

Figure 20.3: HRS-R: HV, "top" crate - includes the "pre-shower"

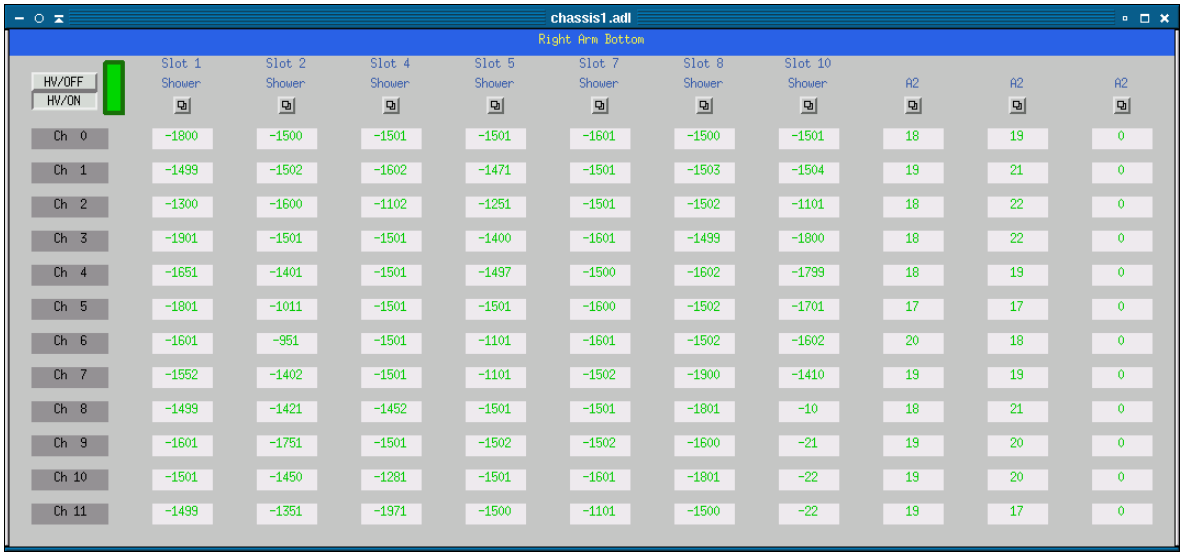

Figure 20.4: HRS-R: HV, "bottom" crate - includes the "shower" detector.

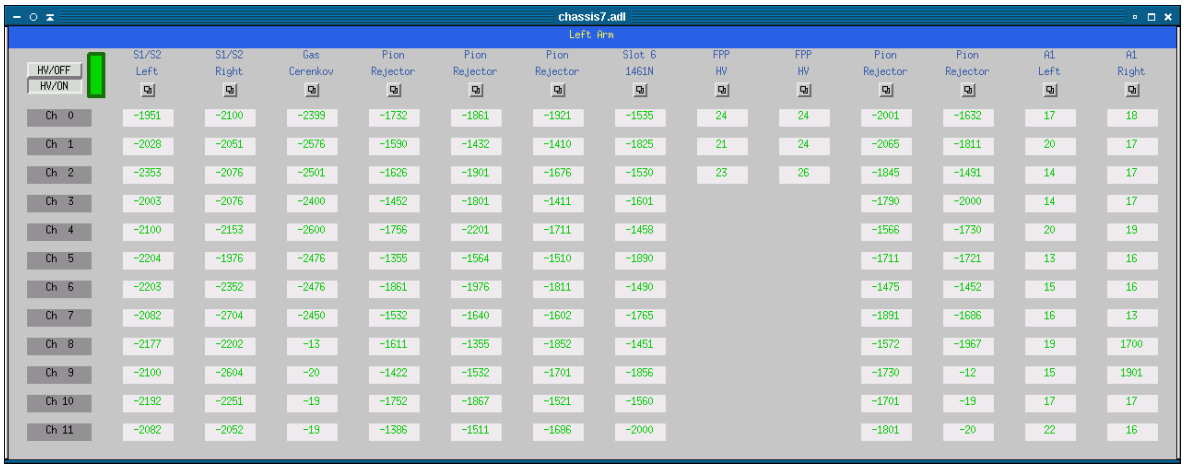

Figure 20.5: HRS-L: HV, includes the "pion rejector".

20.2.2 Electronics

The signals from PM tubes (see Table 20.1) are delivered via the 1 μs delay lines to LeCroy ADC 1881M.

20.3 Safety Assessment

Before handling the HV bases on the detector stack:

1. Turn off the HV.
2. Make sure the HV can not be turned on remotely - turn off the HV crate, or put it in the "local" mode using the key at the front panel of the crate. . In order to ensure that the crate HV would not be turned on one can also turn off the power switch at the rear panel of the crate.

Keep in mind that each $15 \times 15 \times 35$ cm^3 detector has a mass of about 35 kg.

20.4 Authorized Personnel

Name (first,last)	Dept.	Call [4]		e-mail	Comment
		Tel	Pager		
Eugene Chudakov	JLab	6959	584-	gen@jlab.org	*Contact*
Bogdan Wojtsekhowski	JLab	7191	584-	bogdanw@jlab.org	
Jack Segal	JLab	7242		segal@jlab.org	
Hakob Voskanyan	ErPhI	OFF		voskania@jlab.org	

Table 20.2: Electromagnetic calorimeters (shower detectors) : authorized personnel.

Chapter 21

Aerogel Cherenkov Counters [1] [2]

21.1 Overview

There are three aerogel Cherenkov counters available with various indices of refraction, which can be installed in either spectrometer and allow a clean separation of pions, kaons and protons over the full momentum range of the HRS spectrometers. The first counter (AM) contains hygroscopic aerogel[3] with a refraction index of 1.03 and a thickness of 9 cm. The aerogel is continuously flushed with dry CO_2 gas. It is viewed by 26 PMTs (Burle 8854 [32]).

For high-energy electrons the average number of photo-electrons is about 7.3 [33].

The next two counters (A1 and A2) are diffusion-type aerogel counters. A1 has 24 PMTs (Burle 8854). The 9 cm thick aerogel radiator used in A1 [4]. has a refraction index of 1.015, giving a threshold of 2.84 (0.803) GeV/c for kaons (pions). The average number of photo-electrons for GeV electrons in A1 is $\simeq$ 8(see Fig. 21.1). The A2 counter has 26 PMTs (XP4572B1 from Photonis [31]). The aerogel in A2 also hygrophobic has a refraction index of 1.055, giving a threshold of 2.8 (0.415) GeV/c for protons (pions). The thickness of the aerogel radiator in A2 is 5 cm, producing an average number of about 30 photo-electrons for GeV electrons.

21.2 Mirror Aerogel Cherenkov Counter [5] [6]

AM is a silica aerogel Cherenkov counter with a compact reflection mirror design, which was dictated by the available space (36.3 cm along the incident particle direction). In addition, the high singles rates expected in Hall A are better handled with segmented detectors covering the focal plane; this requires short pulse decay times. Even though the

[1] *CVS revision* Id: aerogel.tex,v 1.14 2005/04/04 22:27:25 gen Exp
[2] Author: B. B. Wojtsekhowski bogdanw@jlab.org
[3] Airglass AB, BOX 150, 245 22 Staffanstorp, Sweden.
[4] Matsushita Electric Works, `www.mew.co.jp`.
[5] *CVS revision* Id: aerogel.tex,v 1.14 2005/04/04 22:27:25 gen Exp
[6] Author: G.J. Lolos gjlolos@jlab.org

diffusion length in silica aerogel can be quite short for low λ light generated in the SiO_2 radiator [34], enough directionality remains in the visible λ region, where the selected PMTs have good quantum efficiency, to make light collection with mirrors an attractive and practical alternative.

An effective segmentation of the aerogel Cherenkov counter, matching the segmentation of the trigger scintillators, can be used to separate multiple tracks through the focal plane and will allow an additional element of selectivity and track sensitivity in the focal plane instrumentation. This means that specific sections of the focal plane can be physically disabled from the trigger if the experimental conditions require it. It will also provide the capability to identify and separate pions and protons traversing the focal plane trigger scintillators and the vertical drift chambers (VDCs) within the resolving time of the system (double hits). For example, in the off-line analysis, the aerogel counter PMT with the highest number of photoelectrons can be matched with the trigger counter and VDC information to identify the actual path of a pion, thus separating it from a simultaneously detected proton which has no Cherenkov signature. Such a capability of double hit resolution is not possible with diffusion Cherenkov counter designs, because the photon collection efficiency does not have a strong spatial correlation with the incident particle track within the aerogel material.

The segmentation, in addition to supplementing the information on the individual particle position along the focal plane, couples well with the desire to increase the active solid angle viewed by the PMTs in the counter. Although the photon detection probability is not as directly proportional to the solid angle covered by PMTs as in the case of a diffusion box, clearly the larger effective coverage leads to a higher probability that a photon will end up on a PMT. Given the divergence of the beam envelope incident on the aerogel and the diffusion of the light in the low λ region by the aerogel material, an increase in the area covered by PMTs results in an increase in the number of photons detected. As a result, a total of 26 PMTs are used in the counter, as shown in Fig. 21.2, with minimal spacing between their μ-metal shields (2.8 mm). The total area covered by the PMT photo-cathode windows comprises 72% of the area of the counter opposite the planar parabolic mirrors. A cross sectional schematic of the detector is shown in Fig. 21.3, clearly illustrating the planar parabolic design of the mirror surfaces and their relative orientation with respect to the PMTs, and the orientation of the counter relative to the central axis of the spectrometers.

The close spacing of the μ-metal shields creates dielectric breakdown problems. The μ-metal shields are at cathode potential (-2950 V) to avoid the capacitive discharge from a grounded μ-metal shield to the glass of the photo-cathode; discharges would contribute to the noise level in the PMT and adversely affect their performance at high operating voltages. This necessitates extra precautions in order to avoid dielectric breakdown between adjacent shields and between the shields and the aluminum structure of the counter, which is at ground potential. The solution was to wrap the outer surfaces of the μ-metal shields with a high dielectric value (12,000 V/mm), thin (0.254 mm) Teflon film[7]. In addition, the PMT housings consist of fiberglass-epoxy composites, with added

[7]DuPont Canada Inc., Box 2200, Streetsville, Mississauga, ON L5M 2H3, Canada.

inner and outer skins of 0.0254 mm thick Tedlar[1], with a further combined insulating value of 3,000 V. Such a combination of insulating materials eliminates any breakdown or small leakage current induced noise and simultaneously satisfies all safety requirements.

The final construction of the counter, described in this report, is built around the two sides of the main (PMT) section. Each section consists of two pieces of aircraft quality aluminum alloy, with stiffening aluminum rods formed integrally on the top and bottom. The openings for the PMT housings were machined on these structures using CNC milling machines to keep tolerances to fine levels. The double-walled structure, on both sides of the enclosure, further increases the rigidity of the exoskeleton by forming a second "outer" wall on each side - very similar in configuration to the inner one - and attached to the latter with cross-bolt braces. Each end plate is made out of the same aluminum alloy as the side walls, and also incorporates stiffening lips folded integrally to each plate, one at the top and one at the bottom. Each end plate has been provided with inlet and outlet gas line connections, which will be used to fill the counter enclosure with dry CO_2 gas to protect the silica aerogel from water vapor absorption.

All internal surfaces of the detector, except the planar parabolic mirrors are lined with aluminized mylar[8] to increase the overall reflectivity of the counter. The mirrors are made of $45 \times 20.5 cm^2$ moulded surfaces, formed in one rigid structure. The rigidity is provided by two layers of carbon fiber epoxy composite backing, with a combined thickness of 0.28 mm, and a single sheet of mylar with thickness 0.127 mm. The special mylar material was obtained from exposed negative film used in the cartographic industry, and is of high smoothness and uniformity. One side was aluminized at CERN, while the other side remains in its exposed negative (black) state, further adding to the successive light penetration barriers into the enclosure.

The upper section of the counter containing the mirrors is mounted on its own aluminum sub-frame, which is bolted to the main frame that houses the PMTs. The light and gas sealing action is provided by continuous twin parallel rubber strips along the joint area, and by Tedlar film of 0.025 mm thickness covering the top of the outer planar parabolic area.

The third major component of the counter is a removable tray where the silica aerogel is placed. The tray occupies the bottom part of the counter and has inner dimensions of $195 \times 41 cm^2$. It is formed by a frame with twin aluminum panels which secure the removable frame strung with fishing line in a criss-cross pattern to hold the aerogel panels in place. This "fish-net" frame is secured by screws and is easily removed without disturbing the aerogel panels or requiring re-stringing. The bottom of the tray is formed out of a single layer of carbon fiber epoxy skin (0.127 mm thick) and a layer of aluminized mylar of equal thickness. Externally, it is covered by a single layer of Tedlar film to assure integrity from light penetration; further environmental isolation is provided by two parallel strips of rubber gasket seals enclosing the circumference of the tray and containing the feed-through spacers for the retaining bolts. The tray is equipped with SMA-type fiber optic feed through connectors for the gain and timing monitor system, which utilizes fiber optic cables. Each fiber illuminates two adjacent PMTs, except for

[8]National Metalizing , P.O. Box 5202, Princeton, NJ 08540, USA.

the last PMT on either side (13T and 13B in Fig. 21.2) which have their own dedicated fiber. The light is generated in a gas plasma discharge unit[9] and duplicates the spectrum expected from Cherenkov radiation. In addition, the fibers terminate beneath the silica aerogel; thus the light reaching the PMTs will have the absorption characteristics of real Cherenkov light produced in the aerogel radiator.

Due to the nature of Cherenkov detectors, where only a few photoelectrons (PEs) are emitted by the photo-cathodes in the PMTs, any extraneous light entering the enclosure is very troublesome. As a result of the small number of PEs expected, the PMTs operate either near to or at maximum high voltage, and thus at maximum gain. As such they can suffer damage if a sudden light leak develops. In testing we verified the extreme sensitivity to minute light leaks across the whole length of the structure because of the mirrored surfaces inside the enclosure. With 26 PMTs operating at maximum gain - and viewing, effectively, a giant mirror - sealing the enclosure against single photon penetration requires extra care during initial testing and operations.

The PMTs chosen for the counter were Burle model number 8854 with a 127 mm photo-cathode diameter [10]. The PMT amplification electronics have been described in Refs. [35, 36]. The dynode chain incorporated a 600 $k\Omega$ resistance between the cathode and first dynode instead of the nominal 300 $k\Omega$. This generates a $V_{dyn} = 885V$ voltage drop across the cathode to dynode gap, thus increasing the photo-electron collection efficiency and peak to valley (P/V) ratio. This modification has proven successful in increasing the PE collection efficiency and the single PE resolution. The dynode amplification chain also incorporates a 11 $M\Omega$ resistor in series with the μ-metal shield to eliminate the possibility of electric shock through careless handling; this high impedance also limits the current drawn in the unlikely event of a complete dielectric breakdown between the shields and the aluminum parts of the detector. A schematic diagram of the electronic amplification chain is shown in Fig. 21.4.

The operation of the aerogel detector is discussed in Ref. [33].

21.3 Operating Procedure

Operating Voltage The operating voltage on the PMTs is -2,950 V. This is a near the maximum rated voltage and it has been shown to provide high efficiency, good P/V ratio, and long PMT life. The overall gain of the PMT is not at maximum, as measured by BURLE, since the dynode chain of the 13 dynodes (2nd dynode to 14th dynode) is kept at a -2,600 V equivalent with the original 300 $k\Omega$ resistor value between the cathode and 1st dynode. However, the gain is more than sufficient to separate single PEs from the pedestal on all ADCs we have used so far. It should not be necessary to increase the voltage above the recommended value.

[9] Optitron Inc. 23206 S. Normandie Ave. #8, Torrance, CA 90502, USA.
[10] Burle Industries Inc., 1000 New Holland Ave., Lancaster, PA 17601, USA.

21.4 Handling Considerations

It is generally not advised to open up the counter if the persons involved are not thoroughly familiar with the assembly and specific component function. Routine operation does not require any hands on modifications to the detector, as long as the following operating principles are followed:

Installation and Removal of PMTs The replacement of a PMT or repairs of the electronic amplification chain can be accomplished by the removal of that specific PMT-Base combination. Turn the HV off on all PMTs and remove the rubber hood covering the base and housing interface region. Now remove the three small screws attaching the base to the integral housing. Note that the base can only be secured to the housing in one specific orientation.

Carefully slide out the base with the PMT and μ-metal shield mounted as one unit. Remove the elastomeric ring positioned between the PMT and the μ-metal shield. Loosen the nut securing the μ-metal shield to the base and carefully apply upward force on the shield while someone else is holding onto the base. This will remove the PMT and the μ-metal shield from the socket and base, respectively.

The replacement of the PMT requires experience because it has to be done with the μ-metal shield installed in, but not secured to, the base. The PMT pins need to be aligned with the socket pins in a specific geometry, thus the insertion has to be done by feel and experience. Once the PMT is inserted in the socket, the μ-metal shield is secured the base with the nut. Make sure the shield protrudes past the photo-cathode as much as the tapered design allows. Carefully insert the elastomeric ring between the PMT rim and the μ-metal shield. This ring supports the PMT and prevents it from sliding out of the pins during movement; it also helps seal the interior of the counter from the outside environment and reduces the CO_2 leakage rate. Reverse the process for installation.

Installation and Removal of the SiO_2 Tray **PLEASE NOTE**: The SiO_2 aerogel panels are extremely fragile and sensitive to water and chemical vapor. Do not handle with bare hands: use clean cotton, or another fabric type, gloves instead. Surgical gloves often are contaminated with lubricants and are not suitable for this purpose.

The tray is secured to the main section by hex bolts. The removal of the bolts results in the straightforward removal of the tray. There is minimum clearance between the tray walls and the main section; as a result, the tray has to be removed and installed in a uniform translation with respect to the main body. The frame supporting the fish net (or tennis racket) can be removed from the tray proper by removal of the two small screws in the middle of the tray walls; a tool (hook) is provided for this operation. The SiO_2 aerogel panels can now be removed or replaced. Reverse the procedure for installation. The securing bolts do not need to be tightened very much and, although spacers are inserted between the rubber strips to prevent damage, care and common sense should be exercised. Light and gas sealing is provided by the rubber strips - NOT by brute force.

WARNING: After each removal of any components of the counter, check for light

leaks before turning the HV on at operating values. Even a small light leak can destroy the PMTs if they are at -2,950 V! Check for light leaks with lights out, using a small portable light and a reduced voltage around -2,000 V.

21.5 Diffusion aerogel counters [11]

For a reliable PID of kaons with momenta up to 2.84 GeV/c an aerogel detector with a low refraction index of 1.015 (A1) was constructed. With a low index the light yield is expected to be less, a new design of the counter was evaluated and optimized. The result is an average number of 8 photo-electrons.

For the reliable positive identification of kaons and rejection of protons, a large number of photo-electrons is very important. The second diffusion aerogel counter (A2) was constructed with an aerogel index of refraction of 1.055. With only a 5 cm thickness of aerogel, almost 30 photo-electrons were collected. The large collection efficiency was achieved through several design considerations and use of different type of PMT - XP4572B.

Each detector consists of a tray for the aerogel radiator and a diffusion box which holds the PMTs. The surface of each box is covered with millipore paper. Hydrophobic aerogel was used for both detectors, however the boxes are gas tight so hygroscopic aerogel also can be used. The positive HV used in the detector allows the increase of the solid angle viewed by each PMT and as result the increase of the light collection efficiency. The PMTs don't have μ-metal shields because the magnetic field at the location of these detectors doesn't effect the light collection efficiency. The schematics of A1 and A2 are shown in figs 21.5 and 21.6.

The structure of the diffusion box is shown in Fig. 21.7. The picture was taken before installing the millipore paper.

Fig. 21.8 shows the view of the A1 counter from the inside. The semi-spherical photo-cathodes of the 8854 are on left and right sides. The white wires on the bottom were installed to prevent the motion of the aerogel blocks during detector transportation.

Fig. 21.1 shows performance characteristics of the A1 and A2 counters.

21.6 Safety Assessment

The PMTs are under high voltage and care is required when handling any components of the counter. As stated earlier on in this report, the insulating material between the μ-metal shield and the aluminum exoskeleton far exceeds the requirements dictated by the operating voltage. In addition, the 11 $M\Omega$ resistor between the μ-metal shield and the HV source restricts the current flow below the critical 1 mA level. The combination of Tedlar film, Plexiglas composites, and injection moulded bases are all safe to handle but care should be exercised when handling the aluminum parts of the counter or touching

[11] Author: B. B. Wojtsekhowski bogdanw@jlab.org

the metal back plate of the base. It is strongly recommended to ground the aluminum exoskeleton of the counter, at several spots to a common ground with the HV and signal cable ground. This will further enhance safety and eliminate potential ground loops in the unlikely event of a slow, and otherwise difficult to diagnose, dielectric breakdown between the μ-metal shield and aluminum structure or aluminized mylar of the interior.

21.7 Authorized Personnel

The individuals responsible for the operation of the aerogel Cherenkov counters are given in Table 21.1.

Name (first,last)	Dept.	Call [4]		e-mail	Comment
		Tel	Pager		
Bogdan Wojtsekhowski	JLab	7191	584-	bogdanw@jlab.org	*Contact*
Jack Segal	JLab	7242		segal@jlab.org	

Table 21.1: Aerogel counters: authorized personnel.

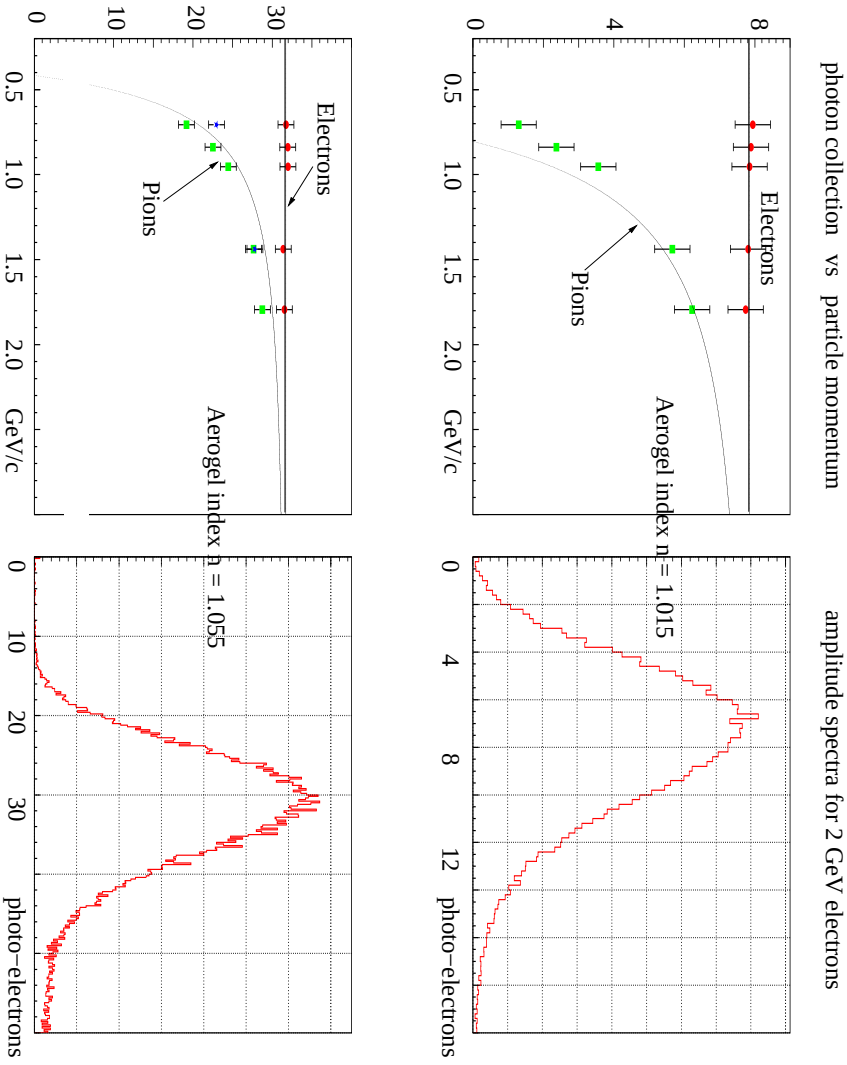

Figure 21.1: Number of photo-electrons in A1 and A2 vs particle momenta and the amplitude spectra.

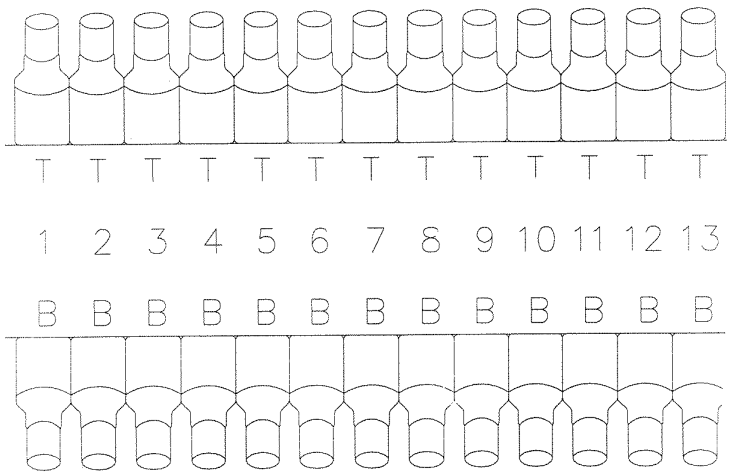

Figure 21.2: Schematic diagram of the aerogel Cherenkov counter as viewed by the incoming particles. The numbers indicate the sections, 1 to 13, in the counter. Each section is viewed by two PMTs, one on the top (T) and one in the bottom (B). The labeling carries no significance other than identifying the PMTs during the testing phase, as described in the text.

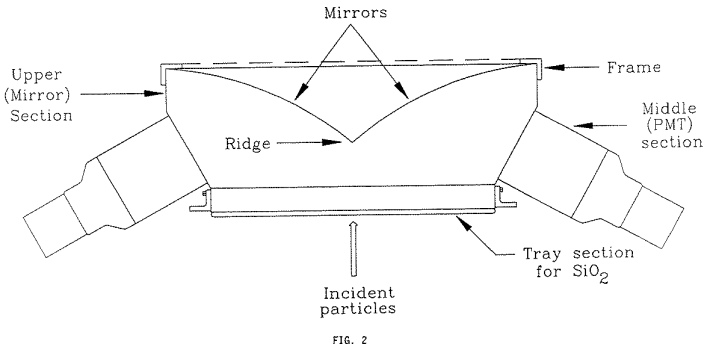

Figure 21.3: Cross sectional drawing of the counter, along the particle direction, showing the planar parabolic nature of the mirrors and the geometry of the PMTs. The joint of the two mirror surfaces in the middle of the counter defines the mirror "ridge".

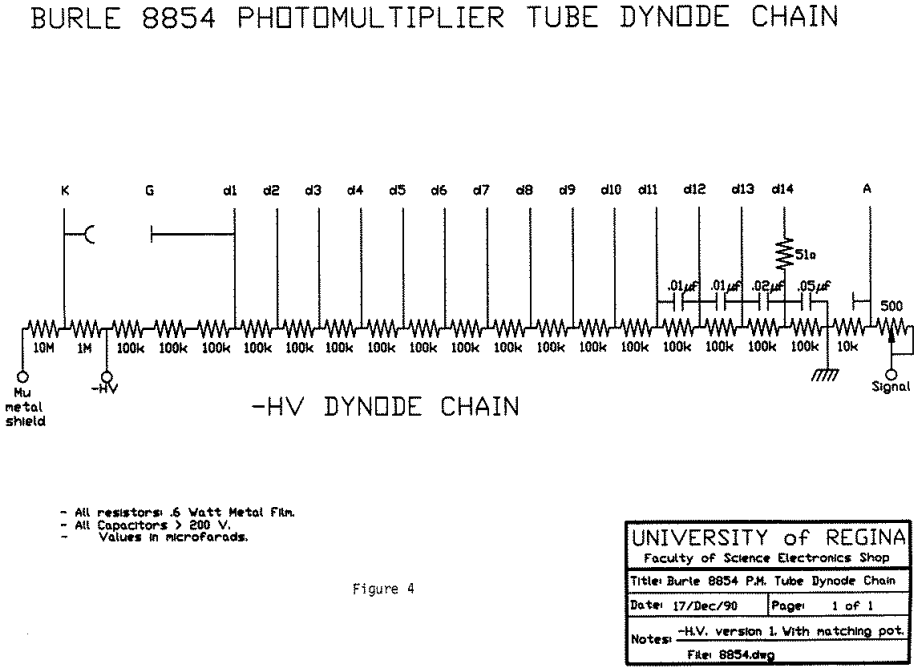

Figure 21.4: Schematic diagram of the electronic amplification chain. The total resistance of 600 $k\Omega$ between the cathode and the first dynode is shown as three 200 $k\Omega$ resistors for sake of clarity. In the actual PC boards, the arrangement is of six resistors of 100 $k\Omega$ each, in order to keep the voltage across each resistor low and avoid surface discharge between the closely packed resistors.

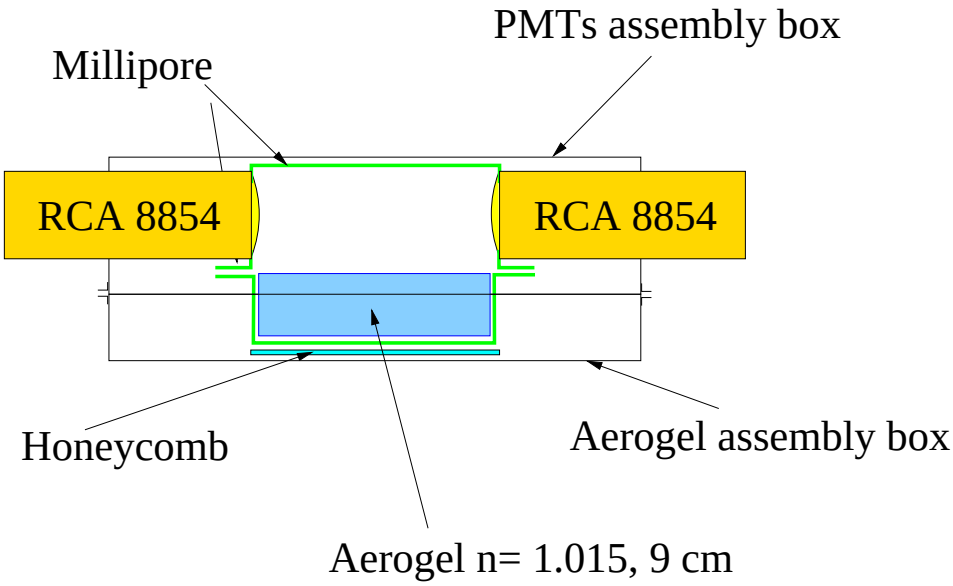

Figure 21.5: The scheme of A1 detector.

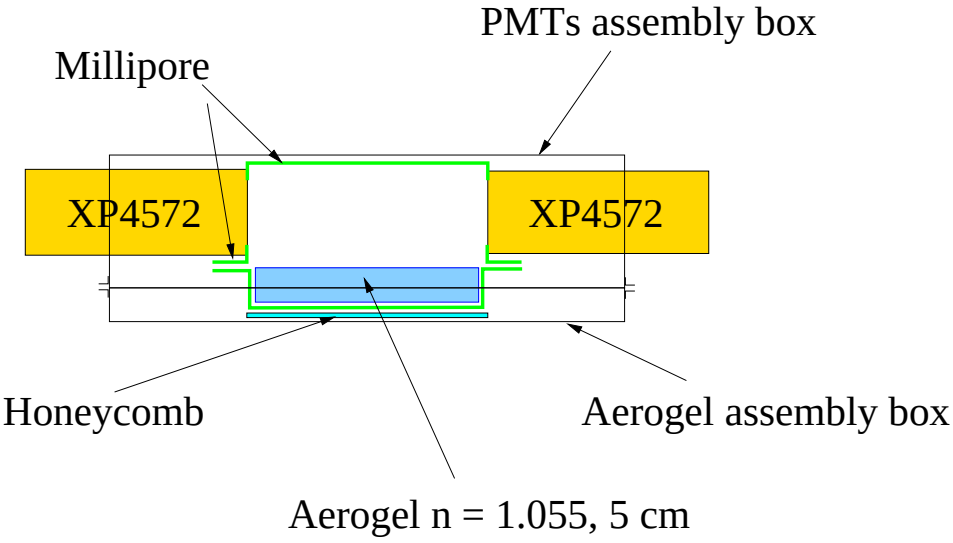

Figure 21.6: The scheme of A2 detector.

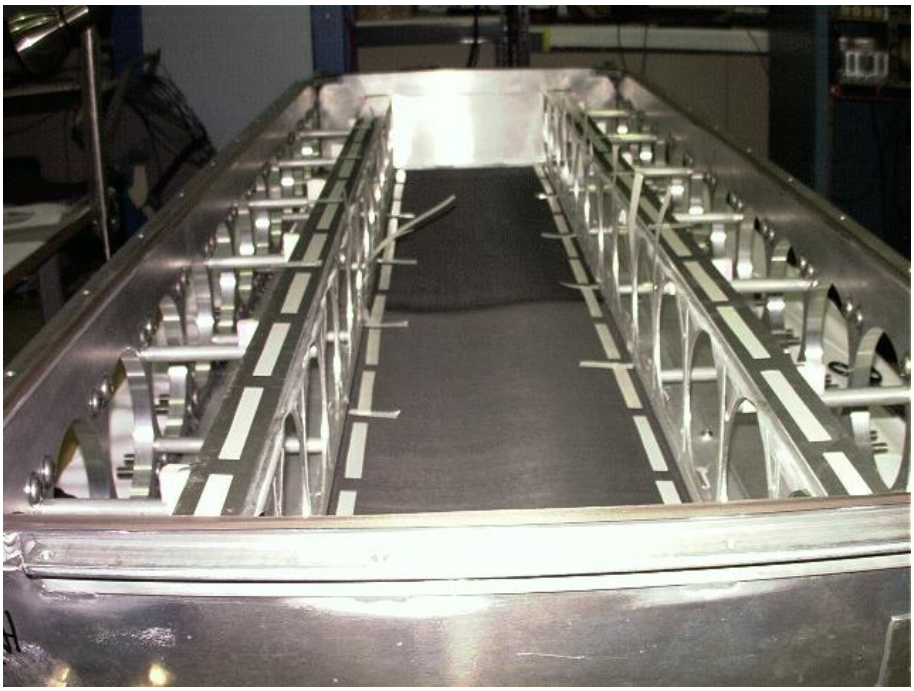

Figure 21.7: The diffusion box of A2 detector.

Figure 21.8: Aerogel A1 detector from inside of the diffusion box.

Chapter 22

RICH [1] [2]

22.1 Purpose and Layout

The Hall A RICH detector is designed to be used for particle identification purposes, mainly to identify kaons from a large background of pions and protons. The detector can be mounted in the detector stack of the left HRS, between the trigger scintillator planes S1 and S2 (S2m), together with the two Aerogel Cherenkov detectors.

Its design is conceptionally identical to the CERN Alice HMPID detector [37], but adapted to the special needs of the Hall A environment. A detailed description of the Hall A RICH detector can be found in [38]. The RICH has a proximity focusing geometry (no mirrors involved) which makes the detector compact (total thickness less than 50 cm) and relatively thin (18% X_0). Figure 22.1 shows the working principle of the adopted solution. The Cherenkov effect takes place in the liquid freon when a charged particle crosses it. The liquid radiator, 1.5 cm thick, is housed in a vessel made of NEOCERAM[3] on all sides but at the exit window, which is made of 0.5 cm thick.pure quartz. The use of a liquid radiator has been imposed by the momentum range (around 2 GeV/c) of the particles to be identified. The Cherenkov photons, emitted along a conical surface, are refracted by the freon-quartz-methane interfaces and strike a pad plane after traveling a proximity gap of 10 cm filled with methane.

The pad plane is covered by a thin substrate of CsI which acts as the photon converter. The emitted photo-electron is accelerated by an electrostatic field (2100 V/2 mm) between the pad plane and an anode wire plane in front of the pads, forming a MWPC (Multi Wire Proportional Chamber). While the anode wires collect the electron avalanche, the counterpart ions are collected by clusters of pads, each of which is connected to the input channel of multiplexed track-and-hold electronics, housed on the back of the pad plane. At the end of this process, the clusters of pads hit by the photons should be

[1] *CVS revision* Id: rich.tex,v 1.6 2008/10/14 13:54:36 camsonne Exp

[2] Authors: B.Reitz reitz@jlab.org, A. Camsonne camsonne@jlab.org,E. Cisbanievaristo.cisbani@iss.infn.it

[3] NEOCERAM is a glass-ceramic material with mechanical and thermal properties almost identical to quartz.

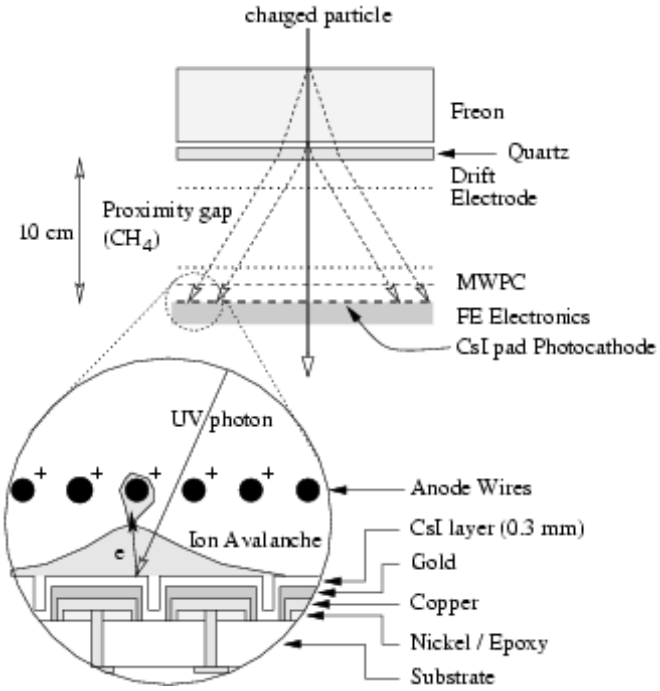

Figure 22.1: *Working principle of the freon CsI proximity focusing RICH.*

scattered around a ring (ellipse) while one cluster coming from the charged particle track should be located in the central region of the ring. A drift electrode operated at 250 V and located close to the quartz window prevents electrons produced by the ionization of the counting gas by charged particles in the proximity gap from reaching the MWPC. The MWPC of the RICH detector has to be operated with pure methane to achieve the designed performances. The first stage of the front-end electronics is mounted on the backside of the detector. Table 22.1 presents a detailed list of the RICH components.

The RICH detector is mounted together with the standard HRS detector package in the shield hut of the left HRS in Hall A. For the operation of the RICH detector the following systems must be installed in Hall A.

22.2 Description of Components

22.2.1 Gas System

The MWPC needs to be flushed with ultra high purity methane, when the detector is operated or in stand-by, or with an ultra high purity inert gas (argon) when the RICH is not used. If the detector is not flushed with clean gas for extended periods, there is a risk of damage or degradation of the CsI photo-cathode. The choice of using methane as the counting gas is based on experience with comparable detectors at CERN and STAR: it is the optimal choice concerning detector efficiency. However methane, like

Table 22.1: Detailed list of the RICH components.

RICH size	$90 \times 210 \times 40$ cm^3
Optics	proximity focusing
Radiator	15 mm of liquid freon (C_6F_{14}) $n = 1.28$
Quartz window	5 mm, $n = 1.56$
Position detector	MWPC, with one cathode of pads, size: 2015×646 mm^2, anode wire pitch: 4. mm, anode-cathode gap: 2 mm, amplification gas: CH_4 at STP, operating voltage: 2 kV
Pad surface	5 pad planes, 630×400 mm^2 each; 19200 pads, 8.4×8 mm each
Photon converter	300 nm of CsI coating the pad surface
Electronics	analog, charge sensitive sample and hold, 19200 channels multiplexed into 40 ADCs

other hydrocarbons, is flammable so care must be taken to mitigate the hazards involved with its use. The methane supply is an addition to the Hall A Wire Chamber Gas System HAWGS [39]. The complete gas system is described elsewhere in this document. Devices to monitor water and oxygen contamination and filters to clean out oxygen contamination are installed in the lines close to the detector itself. The flow is restricted by

- an Excess-Flow valve (maximum flow is 4 l/min, standard flow is 1 l/min) located in each gas supply line just prior to the entry to the gas shed;
- by the mass-flow control system which meters the gas delivered out of the gas shed to the two shield houses.

Metal tubing is used throughout the whole gas system, besides 10 m of nylon tubing around the pivot and in the flexible cable tray. The remote controls for the RICH gas system is integrated into the standard Hall A EPICS controls.

22.2.2 Freon System

The liquid freon needs to be constantly purified when operating the RICH detector. A freon recirculation and purification system is installed close to the RICH detector on the floor of the left detector hut. Besides the filtering and refilling stages, which control the high solubility and volatility of the freon, a device to measure the transparency of the freon is integrated. The slow controls and DAQ for the freon system are integrated into the Hall A EPICS system.

22.2.3 DAQ, Low- and High-Voltage Supplies

The high voltage for the MWPC is provided by a CAEN HV power supply which can be controlled remotely by EPICS. The low voltage for the front-end electronics is provided

by two power supplies which can only be controlled locally, but whose status can be monitored via EPICS. All power supplies are located on the first or second level platform of the left arm detector stack. The DAQ system is integrated into the standard Hall A DAQ system; however it requires one additional VME-Crate, a PC for the PCI based readout and one additional NIM-Bin.

22.3 Operating Procedure

22.3.1 Installation

Before moving the detector into the Hall, it shall be filled with an inert, ultra high purity gas: either carbon dioxide, argon, or nitrogen. After mounting the detector in the detector stack, the appropriate routing for the outlet tubing shall be determined (Hall A exhaust line). This tubing is equipped with a gas bubbler and ends outside the Hall, vented to atmosphere. The outlet tube will be connected to the gas outlet of the detector. The inlet tube will be connected to the detector. Prior to using methane in the RICH detector, the tubing shall be flushed completely with an inert gas (argon) - bypassing the RICH detector - to displace any oxygen in the system.

The low voltage cables and front-end electronics cards need to be installed next (if they aren't already installed) to ensure proper electrical grounding of all parts of the detector. **Now the chamber can be flushed with methane** The signal and control cabling can be installed, as well as the tubing for the freon system. Low- and high-voltage supplies, all VME-crates/NIM-bins for DAQ, and slow controls should now be connected and can be powered up.

22.3.2 De-Installation and Mechanical Work

Before removing the detector from the detector stack or before mechanical work on the detector is performed it shall be flushed with argon. The radiator needs to be drained and the freon tubing removed before the RICH detector can be moved out of the detector stack.

22.3.3 During Data-Taking

The data-taking with the RICH detector can be done remotely from the Hall A Counting House. All necessary monitor and control functions are integrated into the Hall A EPICS system. These functions include:

- Setting and monitoring of the high voltage for the MWPC.
- Monitoring of the freon purity and freon flow.
- Measurements of the freon transparency.

- Monitoring and controlling the gas selection and gas flow for the MWPC.
- Monitoring of the water and oxygen contamination of the counting gas for the MWPC.
- Monitoring of the currents for the low voltage supply of the front-end electronics.

The EPICS controls will be described in more detail in the following subsections. The DAQ of the RICH itself is fully integrated into the Hall A DAQ software. By choosing the appropriate CODA configuration, data from the RICH will be included into the data stream.

22.3.3.1 EPICS Controls

All slow controls for the RICH detector are written in EPICS and run on the IOC iocha3.jlab.org (129.57.188.40). The controls are accessible from a single EPICS screen, which can be started from the HLAMAIN menu [14] by pressing the button "RICH Detector".

22.3.3.2 Normal Operation

Figure 22.2 shows the EPICS screen for the RICH detector for standard operation. The fields which should be monitored are marked with red circles and are described in the following paragraphs.

22.3.3.3 Radiator

The radiator pressure should be monitored. The signal is given in V, with a conversion factor of 1 Torr per 10 mV. If the radiator is filled, the pressure should be at roughly 950 Torr (9.5 V). If the pressure increases, there is a risk of breaking the freon vessel. On the other side, a decreasing pressure indicates either a leak, a wrong setting of a valve, or the freon system is nonoperational. For normal operation the Radiator fill valve has to be open, and the Radiator drain valve closed. If both valves would be closed, the freon would not be purified any longer and its transparency would decrease. If the drain valve is opened the radiator will be emptied. During and after an IOC crash/reboot the Radiator remains in the same state as before. If anything is wrong in this part of the screen, contact the "RICH on call" person.

22.3.3.4 Condensor

The pump control should be on. During and after an IOC crash reboot the status of the Condensor controls remains the same as before.

22.3.3.5 Gas system

Shift workers have to watch the status of the Gas System frequently. The methane flow should be at 500 SCCM (look at the White Board for more up-to-date numbers), and the argon flow at 0 SCCM. Under these conditions the oxygen content should be below 25 ppm, and the moisture below 10 ppm. All six valves have to be in the state "RegFlow". Be aware that the oxygen sensor is flow sensitive - at larger gas flows the readings decrease. See Sec. 22.3.3.9 for details about what to do if the readings are not at the appropriate values.

22.3.3.6 Power Supplies

The low-voltage power-supplies are located inside the shield hut of the left HRS. They can only be controlled locally. The read-back should always be at ± 3.8 V. If this is not the case, the "RICH on call" has to be informed immediately. (Check the White-Board for notes as well.)

22.3.3.7 Fluid Purity

The measurement of the purity of the freon is fully automated. Shift workers should verify that the lamp control is on. The button to start the controls of the CAEN HV power supplies is also located here.

22.3.3.8 High Voltage

The control screens for the HV of the MWPC are started by pressing the button "CAEN", which is in the lower right corner of the EPICS screen in the "Fluid Purity" section. The next level screen allows one to clear alarms and to choose between different modules in the CAEN CRATE. The channels for the RICH are in module 2. Clicking on this button brings up the status screen of the HV module. The RICH uses channel 16 for the anode wires and channel 17 for the shield wires in front of the radiator. They should be at roughly +2100 V and +250 V. The current is typically very low (less than 0.1 uA). If the HV trips the alarm should be cleared, and then one can try to turn the chamber back on (go to the Module 2 controls screen). The ramp-up rate is low and it takes several minutes. If the chamber trips again, or if it trips frequently, the "RICH-on-call" should be informed, and no further attempt to reset the chamber should be made.

22.3.3.9 Procedures for the Gas System

There are two common problems with the gas system for the MWPC of the RICH. If the IOC crashes and does not reboot, the Interlock system takes over. In this status the RICH detector is flushed with whatever gas is in the line with a very high flow. This is safe, as long as the detector was in normal condition before the crash. However due to the large flow, the methane bottle(s) would run empty very fast. Also the operator has no control to remotely stop the gas flow in case something happens. Therefore the shift

workers should contact the "RICH-on-call" if the IOC hangs and does not come up by itself.

After an IOC crash it should reboot by itself. However, initially the IOC turns down the gas flow, and puts the valves in the RegFlow position (see Fig. 22.3). If the gas does not flow there is a slight chance that it becomes contaminated. Therefore the procedure to recover is the following:

- Set all six valves to "Purge" mode.
- Set Methane Flow to 800 SCCM (see Fig. 22.4).
- Purge the lines for at least 15 min, or until the Gas Oxygen reading is below 30 ppm.
- Set the Methane flow to the nominal flow rate.
- Set the six valves back to "RegFlow".

If there is any other problem with the gas system of the RICH, the "RICH on call" should be contacted.

22.3.4 Exchange of Gas Bottles

The gas system automatically switches to the second methane bottle if the first one runs empty. With the standard gas flow a single bottle will last for two weeks. When a gas bottle is exchanged, a very tiny amount of air (several ml) can in principle enter the system. This amount would not generate any fire hazard, since it is small compared to the volume of any subsystem of the RICH. However, since the CsI-photocathode suffers from any exposition to oxygen or water, the following procedure is recommended. Before switching the bottles the RICH gas system should be set in by-pass mode. After the new bottle is installed, the gas system should be forced to use the new bottle until the water and oxygen contamination (measured by the sensors in front of the detector) has first increased, and then decreased and stabilized. Then the RICH detector can be flushed again, and the gas system can be turned back to use any of the two available bottles.

22.4 Safety Assessment

22.4.1 Flammable Gas

The gas used for the RICH detector is methane, which is flammable. The detector is installed inside the left detector hut, together with the standard Hall A detector system. This following section will show that the addition of the RICH with its gas system, although increasing the amount of flammable gas, does not change the Gas System Risk Class assessment of the standard detector package. The necessary measures to mitigate the fire hazards are part of the standard equipment and procedures for operating the Hall A equipment. The following sections will only point out the additional precautions required by the RICH detector.

22.4.1.1 Detector Hut

As methane is flammable there can be no smoking, open flames, or any operation nearby which generates sparks. Another important precaution is to prevent any mixing of methane with air or oxygen. The detector (including all plumbing inside the shield hut) holds less than 250 l of gas (old RICH: 78 l, new RICH 169 l). This leads to the following Q_{RICH} value: V_{Rich} is the volume of the detector, $\rho_{methane}$ is the density of methane, and $X_{methane}$ is the gross heat of combustion of methane relative to that of hydrogen:

$$Q_{RICH} = V_{rich}\ \rho_{methane}\ X_{methane} = 0.25\mathrm{m}^3\ 0.668\frac{\mathrm{kg}}{\mathrm{m}^3}\ 0.39\ =\ 0.07\ \mathrm{kg} \tag{22.1}$$

This is in addition to the Q_{hadron}-value for the hadron detector stack (which is the one installed in the left detector hut). According to [40] $Q_{hadron} = 0.15$ kg. This leads to a total $Q = Q_{RICH} + Q_{hadron} = 0.22$ kg hydrogen equivalent, implying an unchanged Risk Class 0. Precautions relevant to this class are already implemented in the procedures for the Hall A shield hut [39]. Only the additional measures for the RICH gas system are listed here:

- Combustibles and ignition sources shall be minimized within three meters of the RICH–detector and associated plumbing.
- The gas cylinders for the RICH detector shall be located in the gas storage area next to the gas shed.
- All gas lines containing flammable gas shall be so labeled.
- Bubblers, flow meters, and other instruments shall be securely mounted and protected from possible breakage.
- Provisions shall be made to purge the entire system with an inert gas.
- Pressure relief devices shall be provided to limit the pressure to the maximum working pressure in various parts of the system. In the case of low pressure equipment, dedicated bubblers may be used as relief devices.
- The detector shall be leak checked with handheld flammable gas sensors.

22.4.1.2 Gas Mixing Room

Without the RICH gas system the Q value in the gas mixing room was estimated to be 0.007 (see [40]). Besides the use of pure methane instead of 50% ethane, the RICH gas system is an identical copy of the system for the VDCs. Under this assumption the additional Q_{RICH} value from the RICH system is:

$$Q_{RICH} = V\ \rho_{methane}\ X_{methane} = 0.032\mathrm{m}^3\ 0.668\frac{\mathrm{kg}}{\mathrm{m}^3}\ 0.39\ =\ 0.008\ \mathrm{kg}. \tag{22.2}$$

Therefore the total Q is 0.015 kg, which is still below 0.6 kg and implies Risk Class 0. The necessary precautions are already taken and described in [39]. The additional devices and tubing for the RICH gas system shall be accordingly labeled.

22.4.1.3 Bottle on-line / Storage Area:

Each bottle of methane contains 410 scf and therefore increases the Q value by

$$Q_{methane,1cyl} = 410\ \mathrm{scf}\ 0.0283\frac{\mathrm{m}^3}{\mathrm{scf}}\ 0.668\frac{\mathrm{kg}}{\mathrm{m}^3}\ 0.39;\ =\ 3.02\ \mathrm{kg}. \tag{22.3}$$

The RICH gas system uses at most two bottles at any time, therefore the maximum Q value in this outside area increases from 21.1 kg to 27.1 kg. This value is well below 200 kg, and there are no obvious ignition sources within $\sqrt{2+2Q} = 7.5$ m, therefore suggesting that the risk class 1 is unchanged. The safety precautions for this risk class are already implemented in the standard Hall A procedures [39]. For the RICH gas system

- A pressure regulator appropriate for the gas and its environment shall be used.
- An orifice, excess flow valve or other fixed means of limiting the flow to no higher than 4 l/min shall be installed. This value corresponds to four times the maximum operational flow rate of 1 l/min methane.

22.4.2 High Pressure Gas Bottles

The gas used in the MWPCs is supplied in high pressure (2000 psi) gas bottles. This confined high pressure gas represents a tremendous amount of stored energy. The gas bottles are located in the Bottle on-line/Storage Area outside the gas shed.

22.4.3 Trip Hazard

Inlet and outlet tubing for the gas system, tubing for the freon system, and signal- and HV-cables can constitute a trip hazard if not properly routed. Care must be taken to ensure this is not the case.

22.4.4 High Voltage

The CAEN HV crate provides up to 3 kV of low current power. RG-59/U HV cables, certified for up to 5 kV, with standard SHV connectors are used to connect the power supply to the RICH detector. The anode wire plane is typically operated at +2100 V,

the drift electrode plane at +250 V. Before installing the HV cables and before applying the HV the LV cables have to be installed, and the grounding of the detector has to be ensured. The HV shall only be turned on after the detector is thoroughly flushed with the counting gas. The high voltage MUST be turned off during all work on the detector.

22.5 List of people working on the project

The list of presently authorized personnel for work on the RICH detector is given in Tab. 22.2. Other individuals must notify and receive permission from the contact person (see Tab. 22.2) before adding their names to the list.

When the RICH detector is used during an experiment, one authorized personnel of Tab. 22.2 shall be on-call, and his/her contact information posted in the counting house. Furthermore at least one shift worker shall be trained to perform the tasks described in Sec. 22.3.3. This training shall include a familiarization with this document and with the hazards involved in the operation of the RICH detector, and a demonstration of the EPICS and CODA interfaces to control and monitor the RICH. A list of trained RICH operators, together with their signature and with the sign-off of an authorized personnel of Tab. 22.2, shall be kept by the RICH contact person.

Name (first,last)	Dept.	Call [4]		e-mail	Comment
		Tel	Pager		
Alexandre Camsonne	JLab	5064	584-	camsonne@jlab.org	*Contact*
Jack Segal	JLab	7242		segal@jlab.org	Gas and Freon System
Brian Kross	JLab	7022		kross@jlab.org	Freon System
Evaristo Cisbani	INFN	OFF		cisbani@jlab.org	
Francesco Cusanno	INFN	OFF		cusanno@jlab.org	

Table 22.2: RICH: authorized personnel.

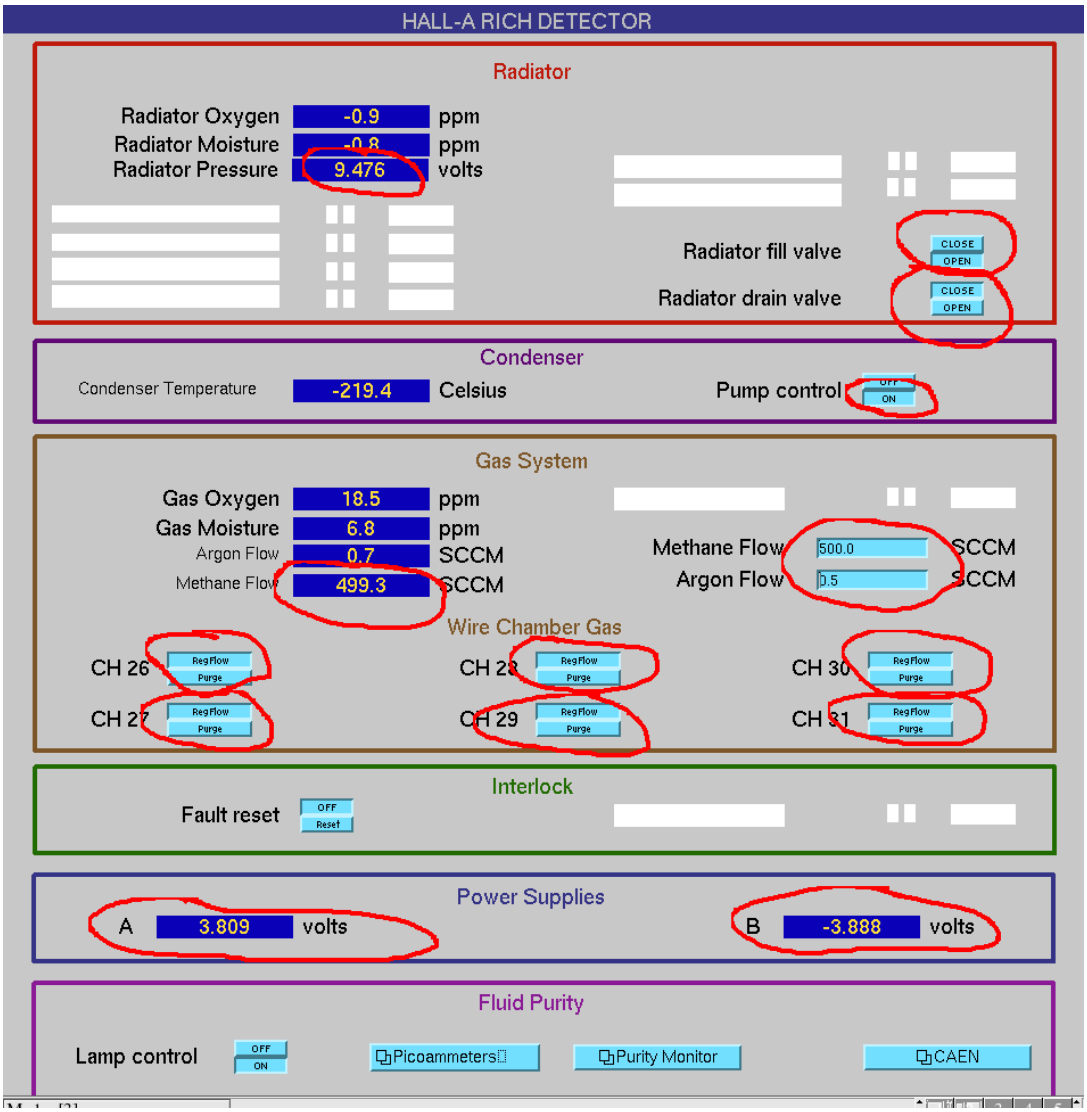

Figure 22.2: EPICS screen for the RICH slow controls. The fields which have to be checked frequently (once per hour) are marked with red circles. The snapshot shows values for normal operation of the RICH.

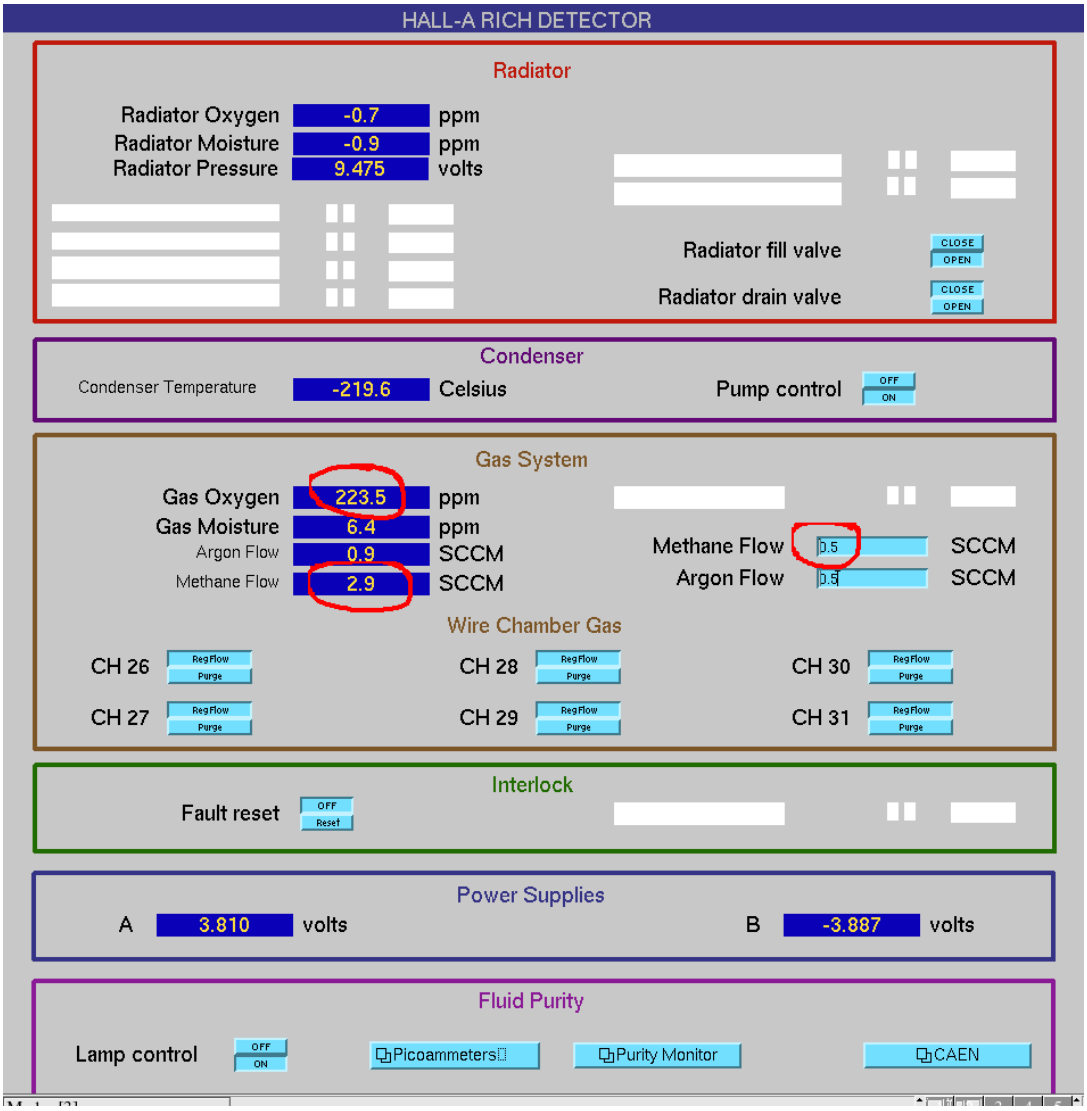

Figure 22.3: EPICS screen for the RICH slow controls after a reboot of the IOC.

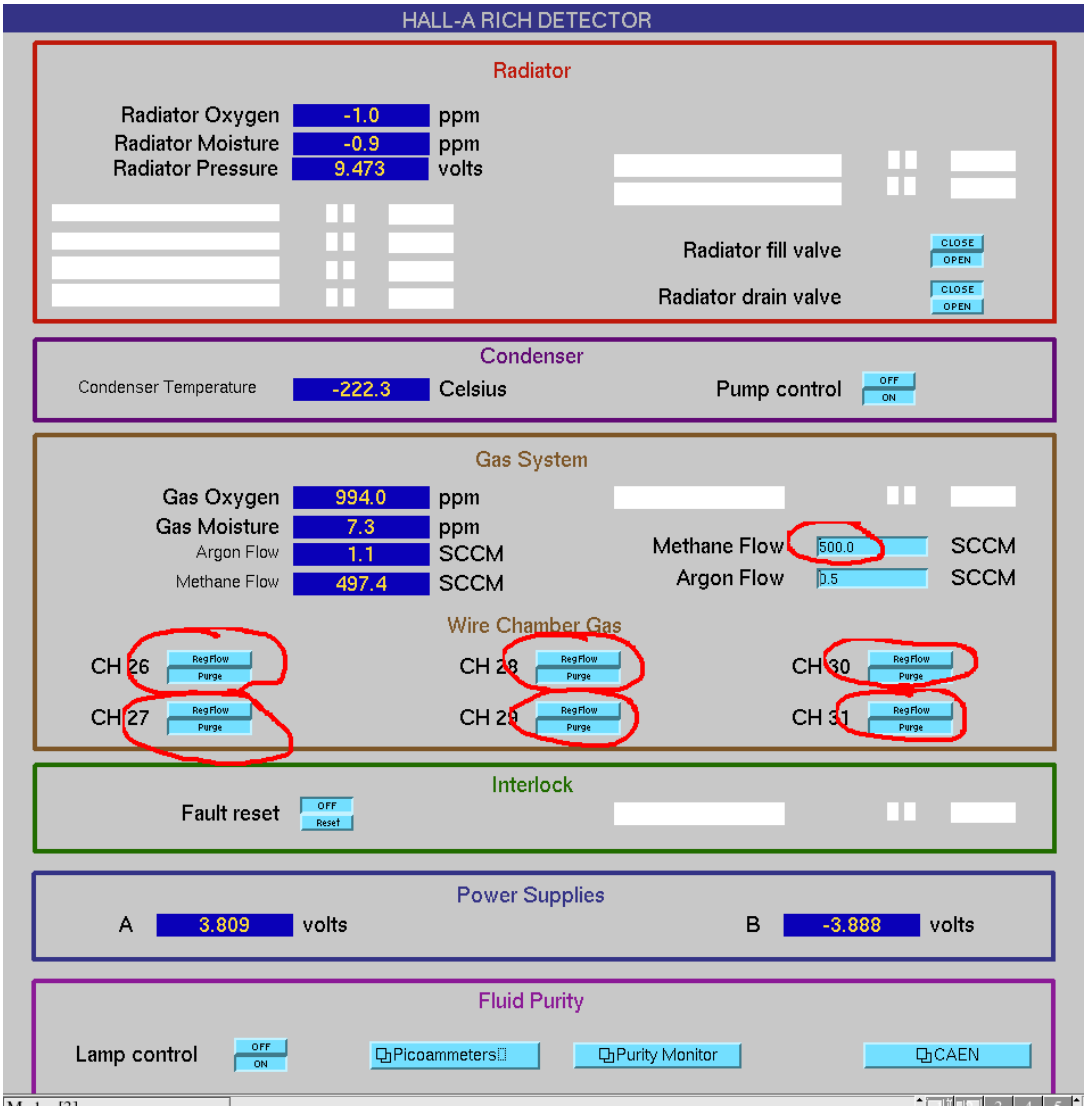

Figure 22.4: EPICS screen for the RICH slow controls while the gas-lines are purged and the detector itself is by-passed.

Chapter 23

The Focal Plane Polarimeter [1] [2]

23.1 Overview

The focal plane polarimeter measures the polarization of protons in the hadron spectrometer detector stack. When the protons pass through a carbon analyzer, the nuclear spin-orbit force leads to an azimuthal asymmetry in scattering from carbon nuclei, if the protons are polarized. The particle trajectories, in particular the scattering angles in the carbon, are determined by pairs of front and rear straw chambers, a type of drift chamber.

As shown in Figure 23.1, the front straw chambers are separated by about 114 cm, and are located before and after the gas Cherenkov detector. The second chamber is followed by scintillator 2, which is in turn followed by the polarimeter carbon analyzer. The rear chambers, chambers 3 and 4, are separated by 38 cm and are immediately behind the carbon analyzer.

The carbon analyzer consists of 5 carbon blocks. Each block is split in the middle so that it may be moved into or out of the proton paths, so that the total thickness of scattering carbon may be adjusted. The block thicknesses, from front to rear, are 9" (22.9cm), 6" (15.2cm), 3" (7.6cm) , 1.5" (3.8cm) , and 0.75" (1.9cm). The block positions are controlled through EPICS [14]; the controls may be reached through the Hall A / hadron spectrometer / detectors menus (see Fig. 25.4). Particles passing through the carbon analyzer can be absorbed in it.

The straw chamber planes are designated as X, U, and V planes. The central ray defines the z axis. X wires measure position along the dispersive direction. The UV coordinate system is created by a 45 degree rotation in the transverse plane of the XY coordinate system, with +U between the +X and +Y axes, and +V between the +Y and -X axes.

The straw chamber operation is described in the following paragraphs.

When a charged particle passes through the chamber in typical Jefferson Lab operating conditions, there will be about 30 primary ionizations of gas molecules. Positive high

[1] *CVS revision* Id: fpp.tex,v 1.7 2003/12/17 03:59:48 gen Exp

[2] Authors: S.Nanda nanda@jlab.org

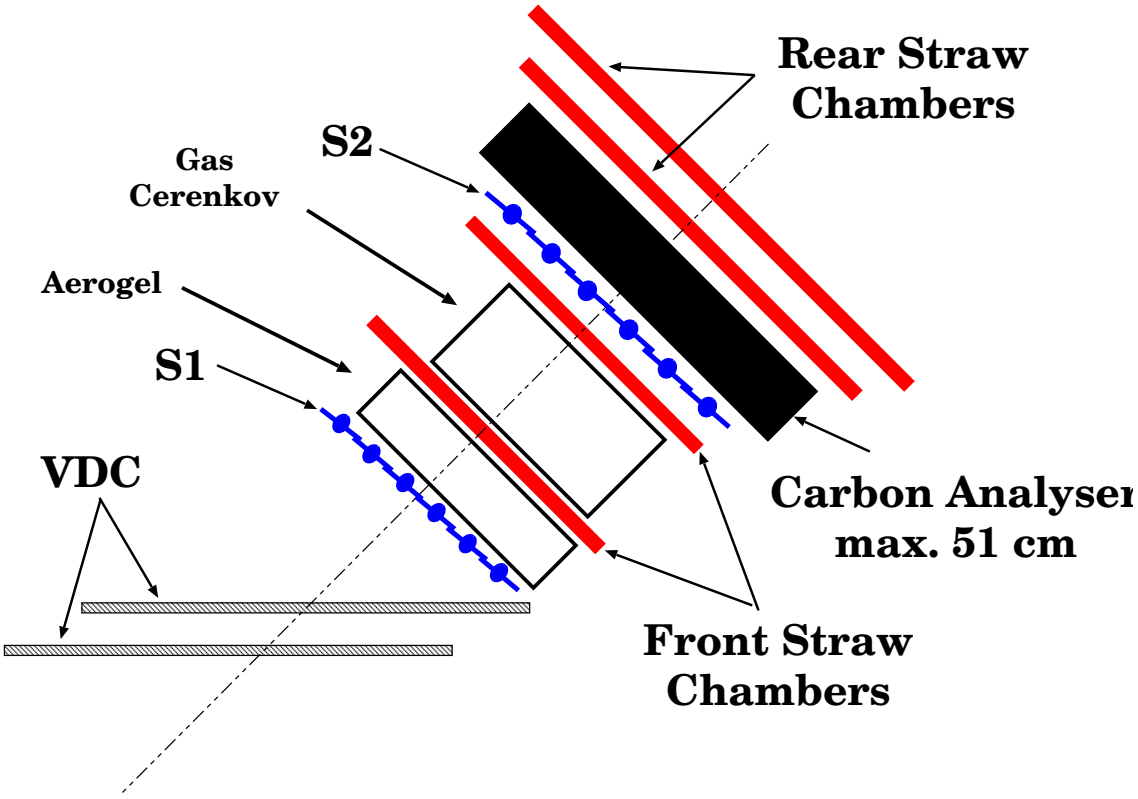

Figure 23.1: Schematic of the hadron detector stack.

voltage of about 1.8 - 1.9 kV is applied to the wire in the center of each straw. Electrons from the ionizations drift towards the wire. When the electrons get within about 100 μ of the wire, the gain in energy between collisions with gas molecules is sufficient that gas molecules are further ionized in collisions. This leads to an *avalanche*, and a gain of about 10^5 per primary ionization under the conditions in which the FPP is run.

The movement of the positive and negative ions leads to a voltage drop on the wire, or equivalently to a negative analog signal. The analog signal is about 20 ns long, with a (negative) peak current of about 40 μA, and propagates towards each end of the straw. At one end of each straw is a board that supplies high voltage (see Figure 23.2); impedance matching on this board, with a 1500 pF capacitor and a 370 Ω resistor, reduces reflection of the signal.

The other end of each straw is connected to a readout board, that amplifies, discriminates, and multiplexes the input signals – (see Figures 23.3 and 23.4). At the readout end, the signal is "coupled to ground" through a 1500 pF capacitor followed by 310 + 50 Ω resistors. In parallel with the 50 Ω resistor are diodes to limit the signal size, preventing damage to the readout board circuitry. An amplifier samples the signal over the 50 Ω resistor. The amp gain is about -10 mV/μA, resulting in a +400 mV signal to a comparator. A threshold voltage input to the readout board is put over a voltage divider

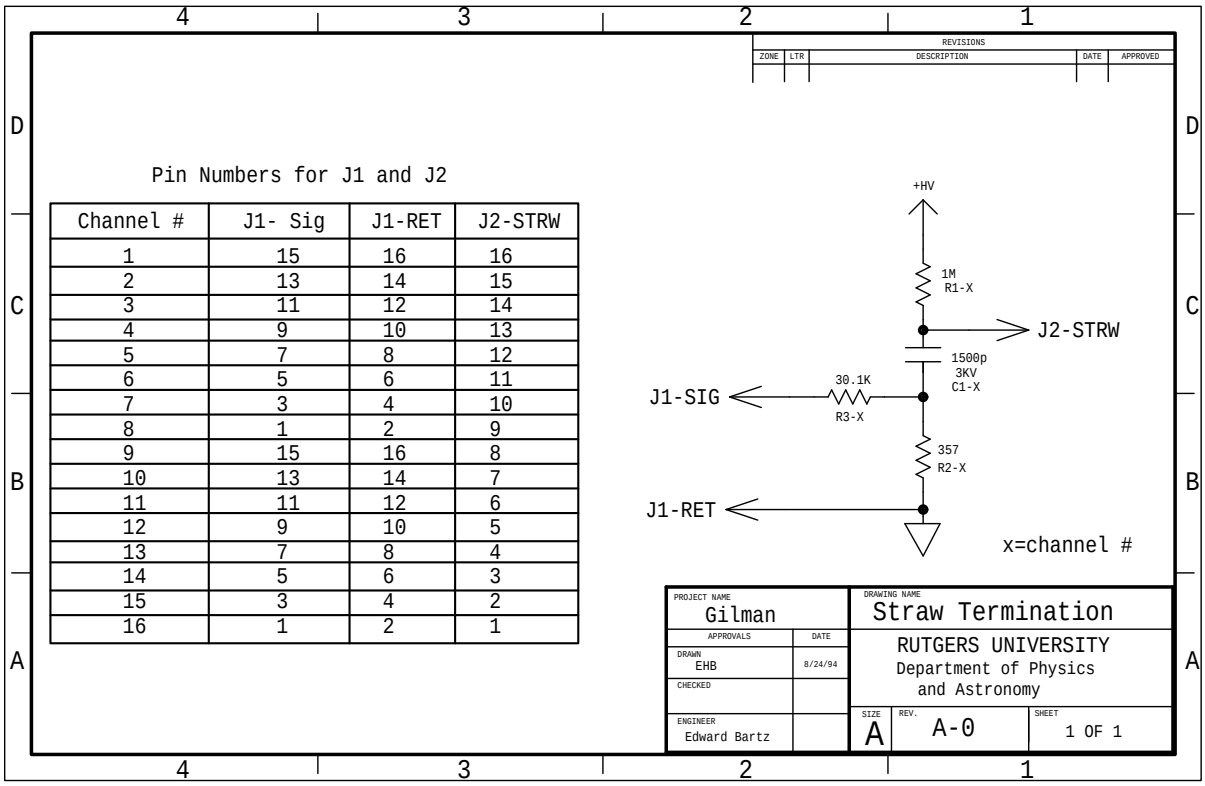

Figure 23.2: Circuit diagram for the high voltage / termination board.

consisting of 1500 + 10 Ω resistors. For the typical 4 V threshold applied to the board, the comparator puts out a logical pulse when the 400 mV (peak) signal rises above the 4 V / 151 = 26 mV threshold. One-shots are then used to fix the width of the logical pulse for each channel – the one-shot width is fine tuned by the use of high precision resistors in an RC circuit; these resistors are mounted in sockets so as to be easily replaced if the need arises. An OR circuit then combines eight individual straw outputs into a single electronics channel.

Internally, within the Faraday cages, the high voltage is distributed to stacks of high voltage / test pulser boards, through which it is connected to each straw via a 1 MΩ 1/4 watt resistor.

The readout cards require a high-current low-voltage power supply and a low-current low-voltage power supply for a threshold level. The readout electronics are mounted on the chamber, shielded within Faraday cages. The high-current power supplies were built by the Rutgers University Department of Physics & Astronomy Electronics Shop. These supplies are set to provide sufficient current at ±5 V for the boards to which they are hooked up. No adjustments, except for turning the supplies on / off, should be needed in normal operation. There are voltage setting, current limiting, and overvoltage protection potentiometers within the boxes; adjustment information is given in the FPP logbooks.

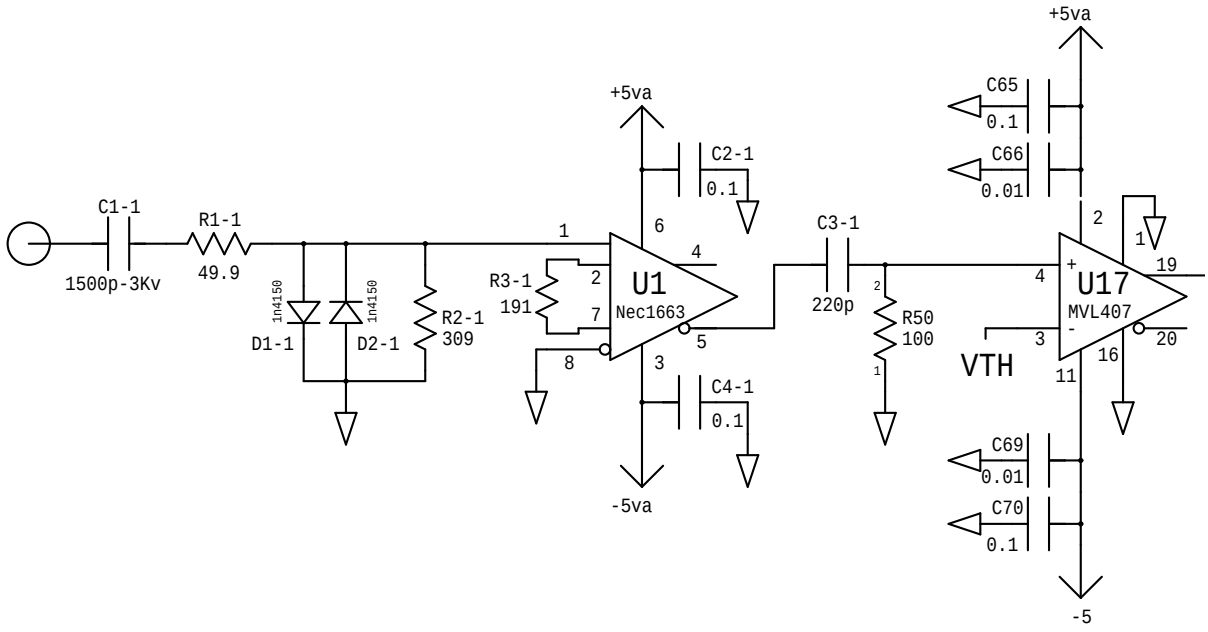

Figure 23.3: Circuit diagram for the amplifier / discriminator section of the readout board.

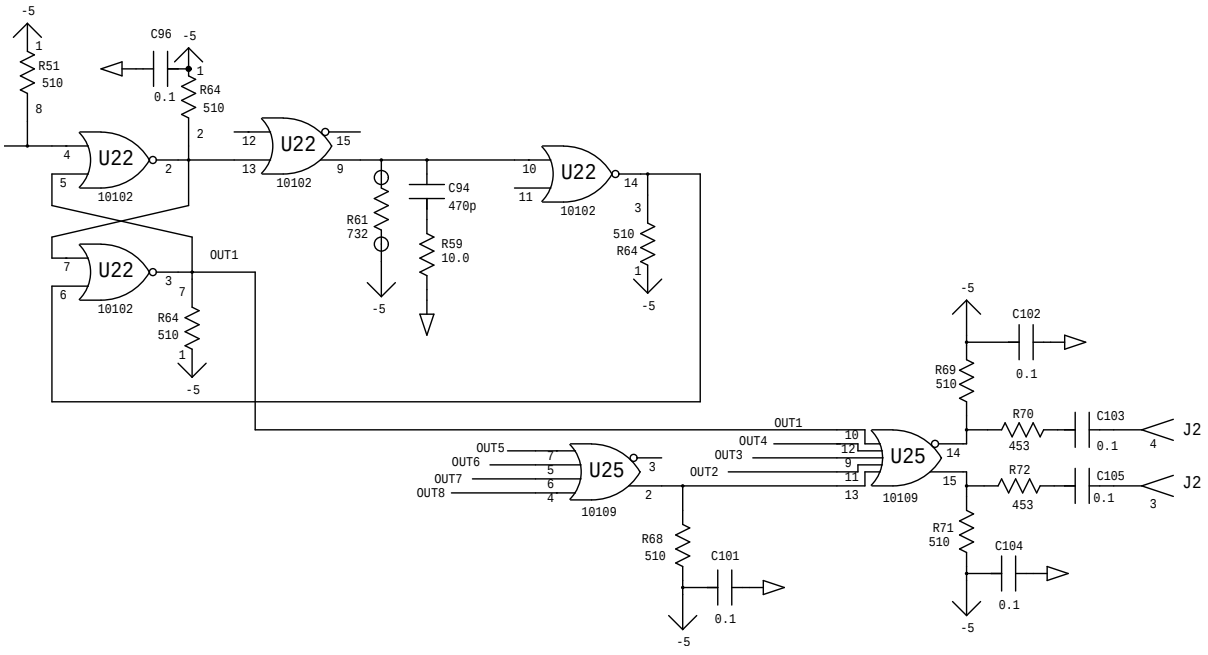

Figure 23.4: Circuit diagram for the logical / multiplexing section of the readout board.

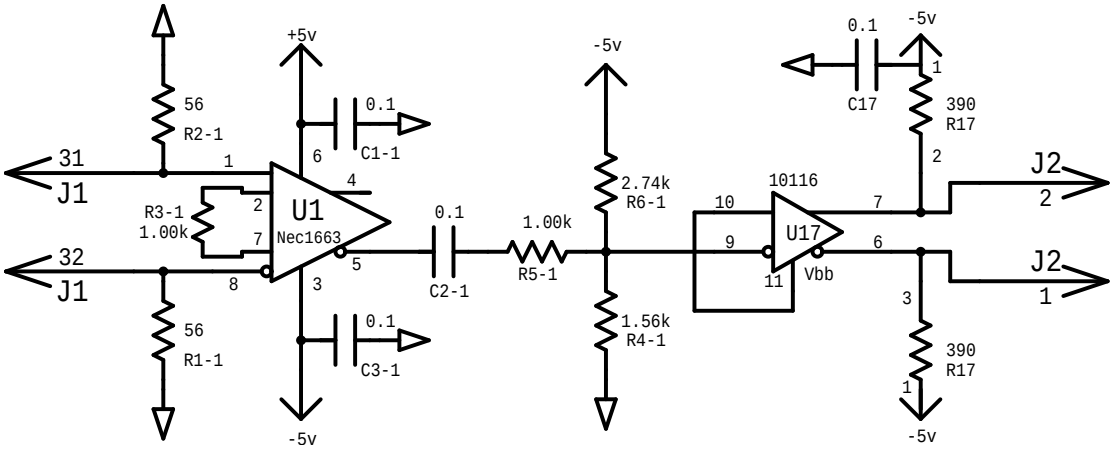

Figure 23.5: Circuit diagram for the level shifter / receiver board.

The low current supplies are *Hewlett-Packard* 6111A supplies. The 6111As can provide up to 1 A for voltage from 0 to 20 V. The supplies are currently hooked up through the rear panel to a DAC in the data acquisition panel; front panel controls on the supplies are disabled, except for the on/off switch. The voltage is controlled through an EPICS FPP threshold window, that is accessed through the Hall A / hadron spectrometer / detectors menus. The high-current supplies are not computer controlled. All supplies are mounted in the detector stack.

The multiplexed logical signals from the chambers have amplitudes smaller than ECL levels, to prevent noise at the chamber. These signals are fed to level shifter boards (see Figure 23.5), located in the FPP rack on the lower electronics level of the detector stack, on the beam right side. A high-current ±5 V power supply for the level shifter boards is located at the bottom of the same rack. The boards convert the signals to ECL standard levels. The level shifter outputs are connected to the starts of *LeCroy* Model 1877 FASTBUS TDCs, located in the lower electronics level on the beam left side. The TDCs measure both leading and trailing edge times to allow demultiplexing. The TDCs are subsequently stopped by the overall event trigger, and are read out by the *CODA* acquisition software. The data are histogrammed online by the *DHIST* software. In-depth offline data analysis requires the *ESPACE* software.

The chamber gas is presently a combination of argon and ethane, about 63% and 37% by weight. The Hall A gas shed is outside next to the entrance of the Hall A truck ramp. Gas is routed from the Hall A gas shed mixing system to the gas panel located on the lower electronics level of the space frame, and subsequently to the FPP chambers. The gas system is shared with the VDCs. A detailed description of the system has been written by Howard Fenker[3].

In addition, the chambers are outfitted with a test pulser capability. A pulse is

[3] http://www.jlab.org/Hall-A/document/HAWGS/HAWGS_OpMan.html

introduced into an 8 channel (16 wire) twisted pair cable on each chamber, which connects to the high voltage boards, at the opposite ends of each straw from the readout boards. The pulse is resistively coupled through a 20 kΩ resistor to the ground leg of a 1500 pF capacitor, and thence into the straws. After propagating through the straw, the pulse enters the readout board. A pulse of about 1 V amplitude in the twisted pair cable is sufficient to provide a few mV signal into the readout boards, resulting in a logical output signal. The system may be used to test the functionality of each readout channel and / or the continuity of the high voltage wire in each straw. The system currently is only implemented for manual operation, except that data may be read out through CODA. This procedure requires some familiarity with trigger logic and setup, should only be done by experts, and is not documented here.

23.2 Operating Procedure

Gas Flow Operating Procedures The chamber gas is mixed 63%-37% (by weight) Ar ethane. The gas is mixed in the Hall A gas shed which is located next to the entrance to the Hall A truck ramp. One needs key #8, which is located in a key box in the Hall A counting house, to get inside the shed where the gas mixing is done. The argon and ethane bottles which feed the gas mixing system are located outside the shed and can be exchanged when they are empty. The mixed gas is sent down into Hall A and to each of the detector huts. There are two each of argon and ethane bottles connected to the gas system and a Matheson 8590 controller switches between the two bottles when the gas pressure in the bottle drops below a certain level. At this point the one bottle can be replaced while the other is being used. The procedure for changing gas bottles is outlined below:

1. Warning: High pressure gas bottles contain significant stored energy and are potentially hazardous. Handling of gas bottles should be done only by qualified, trained personnel.

2. For smoothest operation, used gas bottles should be replaced before their internal pressure drops below the desired regulator output pressure.

3. Two possible cases exist in which a gas bottle needs to be replaced: only one empty gas bottle on a system or both bottles empty on a gas system.

4. For case 1 the sequence of steps is as follows:

   (a) Check in the Hall A Gas Shed. If all bottles have sufficient pressure each of the Matheson 8590 controllers will have one green "RUN" LED lit and one yellow "READY" LED lit. A red "EMPTY" LED lit indicates a bottle with low pressure, the corresponding bottle needs to be replaced. If a red "EMPTY" LED is lit the central "ALARM" LED should also show red. Nothing further needs to be done here; go outside to the Gas Bottle Pad.

(b) Visually verify that the corresponding pressure gauge on the flex line is showing a low pressure. A low pressure is not necessarily zero. Close the bottle valve for the empty bottle.

(c) Disconnect the empty bottle from the high-pressure flex-line. The in-line check-valves will prevent gas escaping from the manifold. Replace the bottle's cap, and move the empty bottle to the EMPTIES storage rack. Note that ethane bottle fittings, type CGA-350, have left-handed threads.

(d) Place a full bottle of gas in the on-line rack, remove the bottle cap, and connect the bottle to the flex-line.

(e) Open the new bottle's valve, check for leaks at the bottle fitting. The corresponding pressure gauge should now read full bottle pressure.

(f) The ALARM state of the Matheson 8590 controller should have automatically reset. Check inside the Hall A Gas Shed. Each controller should show a green "RUN" and yellow "READY" LED lit. If not, re-check the installation of the gas bottle.

5. For case 2 the sequence of steps is as follows:

(a) Check in the Hall A Gas Shed. If all bottles have sufficient pressure each of the Matheson 8590 controllers will have one green "RUN" LED lit and one yellow "READY" LED lit. If a Matheson 8590 controller shows two red "EMPTY" LEDs lit and the central red "ALARM" LED lit, both bottles of the corresponding manifold need to be replaced. Nothing further needs to be done here, go outside to the Gas Bottle Pad.

(b) Follow steps 2. through 5., as detailed immediately above, for both bottles.

(c) The ALARM state of the Matheson 8590 controller should have automatically reset. Check inside the Hall A Gas Shed. Each controller should show two yellow "READY" LEDs lit. If not, re-check the installation of the gas bottle. Press either of the two buttons labeled "LEFT BANK" and "RIGHT BANK". The lit LED above the button you pressed will change from yellow "READY" to green "RUN". You will most likely need to reset the Low Supply Pressure shutdown at this point.

The four FPP straw chambers are connected in parallel to the gas system. (see Figure 23.6).

(The FPP chambers are also in parallel with the VDC chambers.) All gas connections are made using POLYFLO^{TM} tubing and TJNAF-specified connectors. The chamber volumes range from approximately 120 to 220 ℓ. Gas pressure in the chambers is typically a few Torr above atmospheric pressure. The gas flow through the chambers may be independently varied and is typically set to 7 ℓ/hr, leading to a replacement of the chamber volumes about every 15 - 30 hours. Gas is exhausted from the FPP chambers through a bubbler containing $<$ 1 mm of mineral oil. A typical chamber leakage rate at

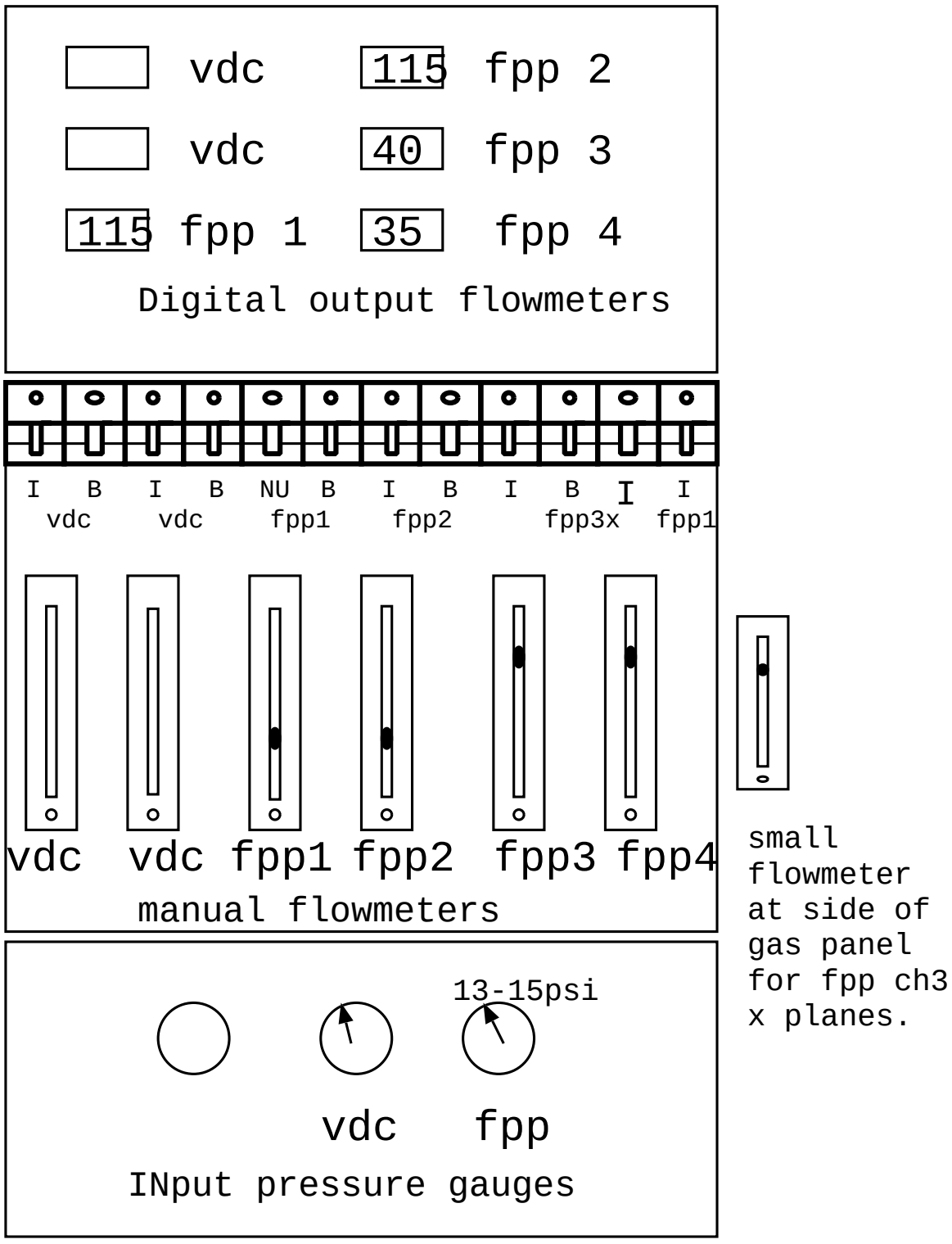

Figure 23.6: Drawing of the gas panel on the hadron detector stack.

this flow rate is 25 - 50 %. The flow rate of 7 ℓ/hr when combined with the leak rate of $\leq$ 3 ℓ/hr results in a complete exchange of gas in the chambers roughly every 1 - 2 days. At this level of consumption, a full gas bottle connected to the FPP system lasts approximately 10 days. When a bottle is nearing empty ($\approx$ 90%), it should be changed since there may be heavy contaminants in the gas. Gas bottles may only be changed by authorized personnel.

Gas-handling Procedures

1. Typically gas is continually flowing though the chambers. If at all possible, gas flow should be continuously maintained, even in no-beam time periods. This avoids time loss to reconditioning and maintains the desirable steady-state operating condition. If the chambers are not being used in an experiment, the flowmeters for the front chambers are set to 20 and the flowmeters for the rear chambers are set to 60. When the chambers are used in an experiment the standard setting for the front chambers is 40 and for the rear chambers it is 105.

2. Gas pressure at the gas panel on the detector stack should be in the range 13 - 15 psi. With the large leakage rate of the FPP chambers, we typically run at near the limit of the capacity of the gas mixer to supply the gas flow demanded by the FPP and VDC chambers. Therefore it is possible to demand too much flow rate from the mixer. If the gas pressure drops below 13 psi drop the flow to the FPP chambers and contact Jack Segal or Howard Fenker to determine the cause and remedy for the situation.

The status of the gas handling system should be monitored carefully as well as logged at least once per 8-hour shift. Any substantial deviation from the median parameters indicates a change in the operational parameters of the FPP and should be immediately investigated.

Power Supplies and Electronics Procedures The power supplies and readout electronics associated with the FPP are a mixture of commercially purchased equipment and equipment designed and/or assembled with the Rutgers University Department of Physics & Astronomy Electronics Shop. The reader is directed towards the manuals made available by the manufacturer for the detailed information not provided here for the commercial equipment. For the Rutgers constructed equipment, further documentation is available on the web page[4].
and through FPP notebooks (try for example contacting R. Gilman for notebooks maintained by Rutgers, CEBAF Center, phone 757.269.7011).

The LeCroy 1458 HV control crate houses the Lecroy 1469P modules which control the HV for the FPP chambers. The 1469P has 3 master HV channels and each master HV channel controls eight slave channels. In slot 7 of the 1458 is the 1469P module

[4] http://www.jlab.org/~gilman/fpp-homepage.html

which controls chamber 1 and chamber 2. In slot 8 of the 1458 is the 1469P module which controls chamber 3 and chamber 4. The individual slave channels can trip from high current faults or other trip faults, but all eight slave channels must be raised and lowered together by setting the master high voltage. The HV provides +1.8 - 1.9 kV nominal to each of the $\approx$ 5100 wires in the four FPP straw chambers. The power supply is located in the detector stack at the top of crate 6 in the upper electronics level. This unit is controlled through HAC13. Connections from the power supply to the chambers are made using standard SHV connectors mounted on red RG-59/U HV cable good to 5 kV.

The high-current low-voltage supply boxes were assembled by Rutgers University. They are designed to provide a maximum current of about 1.6 / 0.6 A at -5 / +5 V to each of the 318 readout cards on the four chambers. There are 63 / 63 / 90 / 102 cards on chambers 1 / 2 / 3 / 4. Typical operating currents are about two-thirds of this nominal maximum value. The +/-5 V power lines are independently fused to each card. Each of the eight supply boxes contains two or three power supplies, each rated for either 35 or 50 A. There are two power boxes for each chamber. Six boxes are located at the lower rear end of the detector stack. The second boxes for chambers 3 and 4 are located at the top of the detector stack, on an aluminum plate just off the upper electronics level. These power boxes are monitored through EPICS, but turned on/off though front panel switches.

Hewlett-Packard 6111A power supplies are used to provide typically 2 - 3 mA current per readout card. Each of the front and rear chambers have their own power supply. The front chambers thresholds are fused, to limit current drawn in case of a short on the board. The rear chamber cards use a 1.5 kΩ resistor external to the board to limit current drawn, in case of a short on the board. Board threshold circuitry also has a 1.5 kΩ to ground which with the external 1.5 kΩ makes a voltage divider. Therefore, the rear threshold supplies are typically set to a voltage which is a factor of two larger than the front threshold supplies to give the same threshold voltage at the readout board. Initial tests indicate that at least a 1.5 V threshold must be applied to the cards to prevent oscillations - this level will stop oscillations that arise when the voltage applied is reduced to about 1.0 V. In practice it has been found that the front chambers should be operated at 4 V and the rear at 7 V. Efficiency studies show that the chamber threshold could be raised by 50% with minor loss in efficiency. The HP supplies are also mounted in the hadron arm detector stack, on an aluminum panel located beneath the two upper high current supplies.

Each straw wire contains a 25μm ϕ, Au-plated tungsten-rhenium wire. The number of wires per plane varies from 176 to 272. Wires are multiplexed 8 wires into one electronics channel, leading to a required 636 TDC channels. In practice a few extra channels are used, so that each 34 wire (16 differential signal channels plus one ground pair) twisted pair cable contains only signals from one of the four chambers. LeCroy 1877 multihit FASTBUS TDCs are used to measure the leading edge time and width of the pulses, to demultiplex the wire hit. Within each group of eight wires, the widths are set to about 25, 45, 35, 55, 90, 65, 105, and 75 ns. The TDCs are located in the upper

FASTBUS crate located on the lower electronics level of the spectrometer space frame in the detector hut. The FPP rack, containing level shifter cards, is located opposite the FASTBUS crates on the lower electronics level. It shifts signals sizes from the reduced ± 50 mV readout card output levels to ECL standard levels, for input to the TDCs. The connections between the readout cards and the level shifter cards, as well as between the level shifter cards and the TDCs, are made with 16-conductor twisted-pair cables. A wiremap, detailing the cabling, is posted on the side of the FPP rack.

Power-up Procedure

1. Ensure that gas flow has been established in the chambers as outlined in the previous section. If it has not, *STOP RIGHT HERE!* Gas flow must be well-established and steady-state *BEFORE* the HV may be enabled.

2. Ensure that all power supplies as well as the FASTBUS crate are off and the LV, HV, and TDC cables are connected.

3. Turn on the threshold and LV power supplies. Use EPICS to turn the threshold voltages up to correct values, about 4.0 V for front chambers 1 and 2, and 7 V for rear chambers 3 and 4.

4. Use HAC13 to turn up the chamber voltages. Standard values are 1875 V for front and rear chambers. It is probably best to raise the HV in 300V steps. After each step wait for the current to settle below 1 μA, then go up to the next level until 1875V is reached. Peak currents during turn-on should not exceed about 40 μA. A 10 V/s ramp rate leads to a leakage current of several μA. Trip levels should be set to 110 μA both for turning on HV and for normal operation, so that bad spills do not trip the chambers. Current should settle to about a μA or less within a few minutes. If the power supply trips during the ramping procedure, it is possible that you are moving too fast, or that some problem has developed with a chamber. Rezero things and begin the procedure again. *NEVER USE THE AUTO-RESET FUNCTION.* If the power supply trips again, *STOP IMMEDIATELY AND INVESTIGATE. There is probably a problem and expert advice may be needed. Some detailed information, intended for experts debugging hardware problems, is available in the Rutgers web pages.*

5. Check for poor signal connections evidenced by hot wires (wires counting extremely fast) or dead wires (wires with no counts) using the histogramming software and cosmic rays. Be careful: apparent problems may result from bad demultiplexing rather than from poor signal connections. Remake any connections as necessary by first powering down the FASTBUS crate.

If at all possible, the HV and LV power supplies should be left on continuously if and only if gas is available to the chamber. This avoids time loss to reconditioning and maintains the desirable steady-state operating condition.

23.3 Carbon Doors

Four of the five doors operate remotely, the fifth needing further testing before it is certified reliable. The doors use the EPICS control system to activate and read back the various components.

Each layer of carbon doors has one relay board. Each board is identical in operation and there is one spare in the event one of them should fail. The global purpose of the relay board is as follows:

1. Turn on the 12V to power to rest of circuit board.
2. Set the polarity on the 90V used to power the motors.
3. Turn the 90V on.
4. Cut off the 90V to a motor if the appropriate limit switch is hit.
5. Read back the status of the limit switches.

The 12V used to power the circuit board runs through this relay and it is activated via an EPICS relay in VME crate 4 (hallasc4). Relay #1 turns on the 90V and it too is activated by an EPICS relay in VME crate 4. Relay #2 switches the polarity of the 90V being fed to the driving motors. When activated it reverses the polarity to the motors and it is controlled by a relay in VME crate 4. Relays #3 and #5 are activated by the inner limit switches of the carbon doors. When these switches are depressed the relay activates and the 90V is cut off. Relays #4 and #6 are activated by the outer limit switches of the carbon doors and like relays #3 and #5 cut off the 90V when activated. Relays #4 and #6 activate when opened rather than when depressed. It would be nice in the future to have relays #3 and #5 also activated by an open limit switch condition and deactivated when the switch is closed. This way the 12V could be off to one of the switches and the doors would stop moving. As it is now, a broken wire/short while the doors are closing could cause the doors to continue moving risking possible damage.

The status of the limit switches is readout via an ADC in VME crate 4. If the switches are closed a -4V is seen at the ADC input. This is effected via a voltage splitter of 3 kΩ - 6 kΩ resistors. The readouts are plugged in via telephone jacks (PJ4, PJ5, PJ6, and PJ7). A temporary fix has been put in place which sends the signals through a capacitor first to block voltage spikes going into the ADC. These voltage spikes caused the ADC to trip off-line which can only be fixed by resetting the VME crate.

The operation of the carbon doors is done via a GUI style control panel . This panel is located under the detector screen of the hadron arm (FPP Carbon Doors). The 3/4" carbon door has been disconnected at the 90V power supply and is not implemented in the software GUI. This door had what may have been some sliding problems. Since it may take a great deal of force to remove this door if it should jam, it will need to be tested so it can be removed easily if it should jam. The normal operating procedure with the GUI is to first make sure all the 90V power is off to each door (Blue switches), then

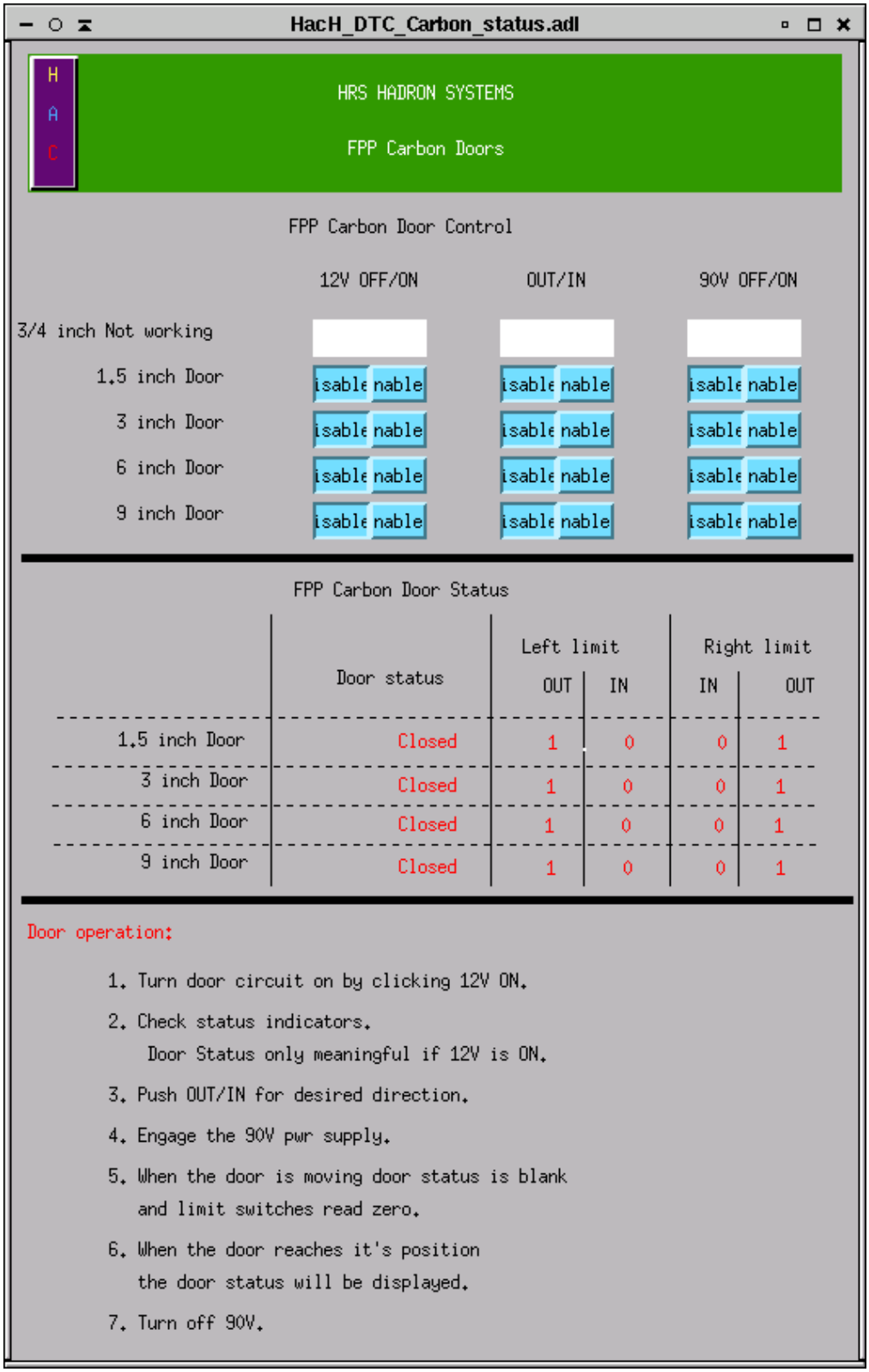

Figure 23.7: EPICS GUI for the carbon doors.

to turn on the 12V power to each door to see where it is located in the stack (in vs. out). If you wish to change the status of a door (in/out) then simply toggle the IN/OUT switch appropriately and turn on the 90V. It takes some time for the doors to move the entire range, so be patient. When the limit switches have been reached the appropriate indicators will light up. You should then turn the 90V off. The important aspect of this procedure is to make sure that you do not change the polarity of the 90V while the doors are moving. This place undue stress on the motors and the power supply as well.

23.4 Handling Considerations

The FPP straw chambers are very delicate devices which are absolutely essential to many Hall A physics experiments. Thus, extreme care must be taken whenever they are moved or used. Also, extreme care must be taken that other objects are not moved into them.

- Before moving a straw chamber, ensure that any protective plates are in position.
- Disconnect and reconnect all TDC, HV, and LV cables with care.
- When initiating gas flow, pay strict attention to the feedback parameters. Straw chambers are not very sensitive to overpressure of perhaps 50 - 100 Torr, but **the straw chambers can be easily destroyed by a few Torr underpressure**.
- Never attempt to apply HV to the chambers until gas flow conditions have reached steady-state.
- As the amount of heat generated by the pre-amp/discriminator cards is substantial, always make sure adequate cooling is provided before attempting to run. This is mostly ensured by making certain that the various cooling holes through the Faraday shields are not covered. The chambers have internally mounted fans where needed, which are powered up along with the readout cards.
- If the leakage current on the high voltage rises linearly with voltage, then a wire has broken and is shorted to ground!

23.5 Safety Assessment

The following potential hazards have been clearly identified.

The High Voltage System The LeCroy 1458 HV low current power supply provides a nominal +1.80 kV. Red HV RG-59/U cable good to 5 kV with standard SHV connectors is used to connect the power supply to the chambers. Each HV channel, of the 6 per chamber, typically will draw a few hundred nA.

The Low Voltage System LV power supplies are used for the pre-amp/discriminator/multiplexer cards. Each card requires up to 1.6 A at -5 V and 0.6 A at +5 V, plus a few mA threshold at 4 - 8 V.

High Pressure Gas Bottles The gas used in the chambers is supplied in high pressure ($\geq$ 2000 psi) gas bottles. This confined high pressure gas represents a tremendous (potentially lethal) amount of stored energy.

23.6 Authorized Personnel

The individuals shown in Table 23.1 are responsible for chamber problems. Generally, the non Jefferson Lab people are responsible for FPP detector problems, whereas the Jefferson Lab people are responsible for more general data acquisition problems or, e.g., gas / voltage supplies shared with other systems.

Name (first,last)	Dept.	Call [4]		e-mail	Comment
		Tel	Pager		
Sirish Nanda	JLab	7176	584-	nanda@jlab.org	*Contact*
Ronald Gilman	Rutgers	7011		gilman@jlab.org	
Charles Perdrisat	CWM	5304		perdrisa@jlab.org	
Vina Punjabi	CWM	5304		punjabi@jlab.org	
Xiaodong Jiang	Rutgers	7011	584-	jiang@jlab.org	
Jack Segal	JLab	7242		segal@jlab.org	

Table 23.1: FPP: authorized personnel.

Chapter 24

The Hall A Gas System [1] [2]

24.1 Overview

The Hall A detector gas systems are located in the Hall A Gas Shed alongside of the truck ramp for Hall A. The gas cylinders in use are along the outside of the Gas Shed in a fenced area. There are racks next to the Gas Shed for storage of full gas cylinders. On the other side of the truck ramp there are racks for storage of both full and empty cylinders. Hall A currently uses ethane, argon, ethanol, carbon dioxide, methane, and nitrogen. Details of these systems can be found in the Hall A Gas Systems (HAGS) manual. A copy of the current manual is in Counting Room A and on the Hall A web page.

Four systems are supplied from two cylinders of Coleman grade CO2. One system is for the gas Cherenkov counters in the HRS detector arrays. One system is for flushing the mirror aerogel Cherenkov counter in the HRS detector arrays. One system is for the gas Cherenkov counters in the (e,p) setup in the beamline. One system is for the FPP straw tube wire chambers. Argon and carbon dioxide for the FPP straw tube wire chambers are mixed inside the Gas Shed.

Three systems are supplied from two cylinders of UHP grade argon. One system is for the VDC wire chambers of both arms. Argon and ethane for the VDC wire chambers are mixed inside the Gas Shed and bubbled through ethyl alcohol. One system is for the FPP straw tube wire chambers. Argon and carbon dioxide for the FPP straw tube wire chambers are mixed inside the Gas Shed. One system is for flushing clean, inert gas through the RICH detector wire chamber.

One system is supplied from two cylinders of Chemically Pure grade ethane. This is for the VDC wire chambers of both arms. Argon and ethane for the VDC wire chambers are mixed inside the Gas Shed and bubbled through ethyl alcohol.

Two systems are supplied from two cylinders of UHP grade nitrogen. One system is used to provide pressurized gas for the automatic cylinder switch-overs in the systems. One system is used to flush impurities from the RICH detector freon resevoir.

[1] *CVS revision* Id: gas.tex,v 1.8 2005/04/04 22:27:25 gen Exp

[2] Authors: J.Segal segal@jlab.org

One system is supplied from two cylinders of UHP grade methane. The system is for the wire chamber of the RICH detector.

Jack(John) Segal - pager and phone are both extension 7242

Hall A Technician on call

24.2 Gas Alarms

In Counting Room A there are two alarm panels associated with the gas systems for the detectors. They are located on the far left end of the control console, mounted one above the other. The upper panel is a Gas Master flammable gas monitoring system. The lower panel is a gas systems status indicator. The Gas Master system will go into alarm if elevated levels of flammable gas are present in either of the Detector Shielding Huts or the Gas Shed. The gas systems status will alarm if any of a number of faults are detected in the Hall A Wire-chamber Gas System. The LED for the specific fault will turn red to indicate which fault caused the alarm.

Response to an alarm should be to contact either of the personnel listed below.

24.3 Authorized Personnel

Maintenance of the gas systems is routinely performed by the Hall A technical staff. Shift personnel are not expected to be responsible for maintaining the detector gas systems (see Table 24.1 for the names of persons to be contacted in case of problems).

Name (first,last)	Dept.	Call [4]		e-mail	Comment
		Tel	Pager		
Tech-on-Call Jack Segal	Hall-A JLab	W.B. 7242		 segal@jlab.org	*Contact*

Table 24.1: Gas for wire chambers: authorized personnel.

Part VI

Slow Controls

Chapter 25

Overview [1] [2]

A distributed computer system based on the Experimental Physics and Industrial Control System (EPICS) [14] architecture monitors and commands the various Hall A systems. The basic components of the system are:

- Input/Output Controllers (IOCs) - VME systems containing single board computers (SBCs) and I/O modules (i.e analog-to-digital converters (ADCs), digital I/O and RS-232C interfaces). Each SBC executes the real-time operating system VxWorks and the corresponding EPICS application (signal database and sequencers).
- Operator Interfaces (OPI) - Computers capable of executing EPICS tools to interact with the IOCs. The four most used tools in Hall A are (a) a Web-enabled version of the Motif-based Display Editor/Manager (MEDM) [18], (b) StripTool and, (c) a signal archiver. MEDM is the main interface used for monitoring and controlling both the hall and accelerator equipment. StripTool allows to monitor the behavior of one or more signals as a function of time. The signal archiver keeps a record of a selected set of signals.
- Boot Servers - IOCs load the various software components needed to perform their functions from these machines (i.e. operating system, signal database and controls algorithms).
- MEDM Servers - OPI computers obtain the framework of each MEDM screen from these machines.
- Local Area Network (LAN) - the communication path joining the IOCs, OPIs and various servers.

[1] *CVS revision* Id: HacOps.tex,v 1.12 2008/04/02 21:48:50 gomez Exp

[2] Authors: J.Gomez gomez@jlab.org

25.1 System's Components

Four Linux based computers are used as OPIs: hacsbc2 (Hall A counting house), hacweb4 (101B), hacweb2 (hall) and hacweb3 (laptop - as needed). Two computers act as boot servers: hacsbc2 and hlasrv (2nd-floor of counting house). Hlasrv also acts as MEDM server. The tasks assigned to the various IOCs are,

- hallasc7 Right HRS motion control.
- hallasc6 e-p energy measurement system.
- hallasc18 Left HRS motion control.
- iocha1 Arc energy measurement system - beam position and profile wire scanners.
- iocha2 Arc energy measurement system - 9th magnet $\int Bdl$ measurement.
- iocha3 RICH counter.
- iocha4 Electron detector stack - VDCs high voltage and discriminator thresholds, reset lines to various DAQ crates.
- iocha5 Beam current monitors.
- iocha11 Hadron detector stack - VDCs high volatge and discriminator thresholds, reset lines to various DAQ crates.
- iocha14 Left HRS - Q2, Q3 and Dipole power supplies and cryogenics, magnetic field probes and, collimator.
- iocha16 Right HRS - Q2, Q3 and Dipole power supplies and cryogenics, magnetic field proves and, collimator.
- iocha17 Monitors supply of various gasses to tracking chambers.
- iocha22 Electron detector stack - LeCroy high voltage supplies located at various points in the hall (i.e. beam-line and both electron and hadron detector stacks).
- iocha26 Polarized ^{3}He target system.
- iocha48 Left and Right HRS Q1 power supplies. BigBox power supply.
- iocha49 Septum magnets.
- iochawt1 Waterfall target system.
- iocha33 Polarized ^{3}He target system (lasers).

25.2 Operating Procedures

Log into the Hall A control system through one of the computers hacsbc2, hacweb4, hacweb2 or hacweb3. The task bar has a "tool box" icon with a small arrow on top. Clicking on the arrow brings up a menu of applications. To start any of these applications, use the left mouse button to click on the application name. These applications can also be started from a terminal by just typing their name.

25.3 AlarmHandler

The "AlarmHandler" notifies the user when either a signal being monitored is outside some pre-defined limits or communication with the IOC in which the signal resides has been lost. "AlarmHandler" will only detect an abnormal signal condition if the signal is included in the application configuration file and, the corresponding IOC database record is set to produce an alarm condition. The application configuration file is ∼/AlarmHandler/*EXP*/ALH-default.alhConfig where *EXP* represents the running experiment number. A detail description of the operation and configuration of this application can be found in the Alarm Handler Users Guide.[3]

25.4 ArchiverViewer

This application allows to look at the history of many EPICS signals (but not all) distributed over the whole accelerator complex including the halls. "ArchiverViewer" is a shell script which simply calls MyaViewer, an interface to the EPICS channel archiver Mya. A FAQ and User's Guide[4] are available for those interested in using this tool. These documents can also be accessed through the "help" button at the top of the application.

25.5 bogies_LEFT and bogies_RIGHT

These applications are used to move the left and right HRS spectrometers to the desired angle. The applications are very similar so, we will use "bogies_RIGHT" as an example. Upon starting the "bogies_RIGHT" application, a screen labeled "RIGHT-HRS Bogies" will open as shown in Fig. 25.1.

Pressing the button labeled "Graph" in the top-left corner of "RIGHT-HRS Bogies" will open two more screens: one labeled "Strip Chart" and an associated, column like, signal selection screen (see Fig. 25.2). The signal selection screen allows to select the signals to be plotted in the Strip Chart screen. All signals are plotted with the same color. To highlight a given signal, use the plot legend located towards the right of the Strip Chart screen: clicking on the line next to the signal name will change its color in the main plot. The plot screens are likely to be more useful to the Hall A technical staff than to the shift personnel.

The application screens show the Motor Current Output (MCO) and Motor Velocity Output (MVO) for each of the four middle-ring (M1-M4) and four outer-ring (O1-O4) motors. Also shown are the status and request buttons for the Power Supply Module (PSM), Drive Modules (DM), brakes and, clamps. The clamp request button ("CLAMP RELEAS") actually releases two interlock circuits (the Forward Amplifier Clamp or FAC and the Reverse Amplifier Clamp or RAC) so that the spectrometer is able to move in any direction (i.e. clockwise or counter-clockwise). It is worth to stress that the PSM,

[3] http://www.aps.anl.gov/epics/extensions/alh/index.php
[4] http://devweb.acc.jlab.org/controls_web/certified/MyaViewer/

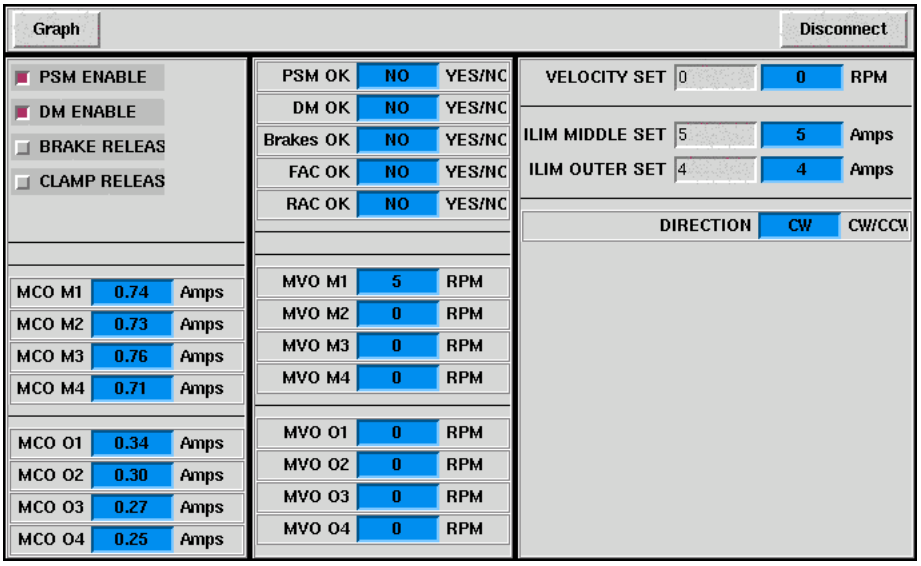

Figure 25.1: Right HRS motion control.

DM, brakes and clamps request buttons represent requests that the hardware interlock circuits may negate. This can be clearly seen in Fig. 25.1 which was taken with the electrical power to the PSM and DMs disabled for septum magnet installation in the central pivot area. Note that PSM and DM request buttons are selected (red color) yet the corresponding status fields show interlock incomplete status ("NO").

To move the spectrometer, select the request buttons in descending order, starting with "PSM ENABLE" and ending with "CLAMP RELEAS". After selecting a button, wait until the corresponding status changes to "YES". If the status does not change, reboot the IOC using the green buttons located in the middle room of the counting house. If the failure persists, contact the Hall A on-call tech. After the clamps have been successfully released, enter a value in the "VELOCITY SET" field (see Fig. 25.1 - "RIGHT-HRS Bogies" screen). The sign of the velocity will determine the sense of spectrometer rotation. The sense of rotation is displayed by the field "DIRECTION".

Safe operation of the spectrometer motion systems requires,

- Find out from the shift leader the administrative constraints imposed on spectrometer motion. These constraints are communicated by the Hall A technical staff to the run-coordinator. Moving the spectrometers while no experiment is taking place (for example, a maintenance period), must first be approved by the head of the Hall A technical staff (E. Folts) or the person designated by him.

- If the administrative constraints allow to move the spectrometers remotely, use the Hall A cameras to ensure there are no objects in the path of the spectrometers.

- Check that the floor marks are seen in the TV monitors.

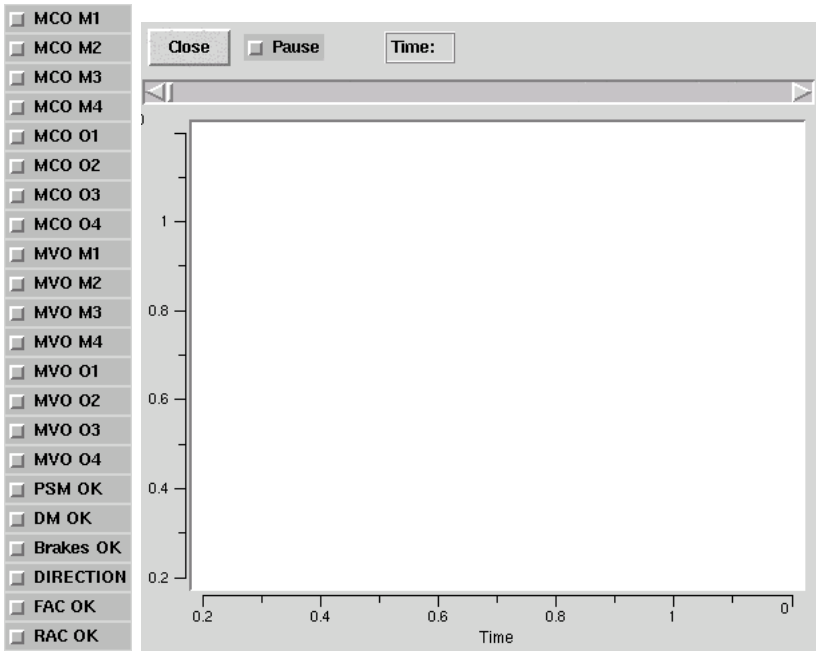

Figure 25.2: Right HRS motion control - additional options.

- Bring up the spectrometer motion application and go through the required steps to get the spectrometer moving. Look at the floor marks to ensure that the spectrometer is moving in the desired direction.
- While the spectrometer is moving, use the Hall A cameras to check that everything looks normal (for example, the cryogenic lines around the pivot). If something does not look right, de-selecting ANY of the interlocks ("PSM ENABLE",..,"CLAMP RELEAS") will stop the spectrometer immediately.
- As the spectrometer approaches the desired floor mark, reduce the spectrometer speed. De-select the "CLAMP RELEAS" button to stop the spectrometer at the desired floor mark.
- De-select the remaining interlocks: "BRAKE RELEAS", "DM ENABLE" and "PSM ENABLE".
- Press the button labeled "Disconnect" to close the spectrometer motion application.

25.6 bogies_SetSpec

This application determines the floor mark and vernier readings required to set each spectrometer to a given angle. Its use is self-explanatory.

25.7 Menu_Accelerator

The "Menu_Accelerator" application brings up a web-version of Monticello, the root MEDM screen giving access to the various accelerator systems. Access to those systems is read-only mode except for some Hall A applications which are described elsewhere in this OSP. Not all the menus shown in this web-version of Monticello are operational because they still are linked to directory structures residing in specific Machine Control Center (MCC) computers.

25.8 Menu_ESR

This application brings up the End Station Refrigerator (ESR) menu. Access to all ESR systems is read-only mode. This application is typically used by the Hall A technical staff to monitor the hall cryogenics.

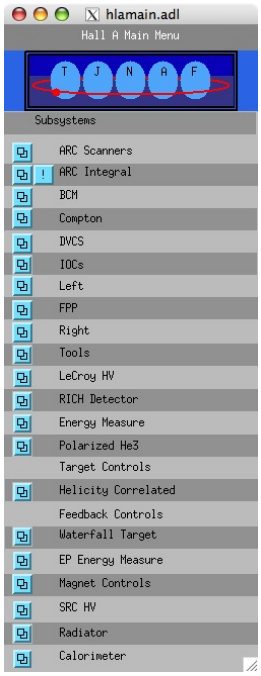

Figure 25.3: Hall A Main Control Screen.

25.9 Menu_HallA

This application brings up a menu giving access to all the EPICS based control systems in Hall A. (see Fig. 25.3). Using this window one can open the "Tools" window (see Fig. 25.4) containing many available functions for slow control of Hall A equipment.

25.10 StripTool

Strip Tool plots a real-time strip chart of the values of one or more signals. It is useful to monitor data trends. A detail description of the options and operation of this application can be found in the Strip Tool Users Guide[5] with one difference; the version used by Hall A does not have a "print" function. To print a strip chart use the application "Snapshot" described below.

25.11 Snapshot

Snapshot refers to a KDE desktop application (ksnapshot) which allows to grab an image of either the whole screen or an individual window. The image can then be sent to a printer or stored on disk.

25.12 Troubleshooting Procedures

The status of most IOCs can be seen by opening the 'Hall A Menu" $--> $ "IOCs". White entries means that the IOC is not responding which can be due to either the IOC not being used by the present experiment or it has failed. Rebooting of the IOCs is accomplished in several ways depending on the specific IOC. If the specific IOC can be rebooted through the Web, the url address is given next to it. The required user and password are posted in the Hall A Counting House. The remaining IOCs are rebooted through either the green buttons located in the middle room of the counting house or the crate resets screen "Hall A Menu" $--> $ "Tools" $--> $ "Crate Resets".

If an IOC fails to reset and its name is "iocha..", call MCC and request that the software on-call person be notified. If the name is "hallasc.." call J. Segal or J. Gomez.

25.12.1 Authorized Personnel

The authorized personnel is shown in table 25.1.

Name (first,last)	Dept.	Call [4]		e-mail	Comment
		Tel	Pager		
Jack Segal	JLab	7242		segal@jlab.org	
Javier Gomez	JLab	7498	584-	gomez@jlab.org	

Table 25.1: Slow controls: authorized personnel.

[5] http://www.aps.anl.gov/epics/extensions/StripTool/index.php

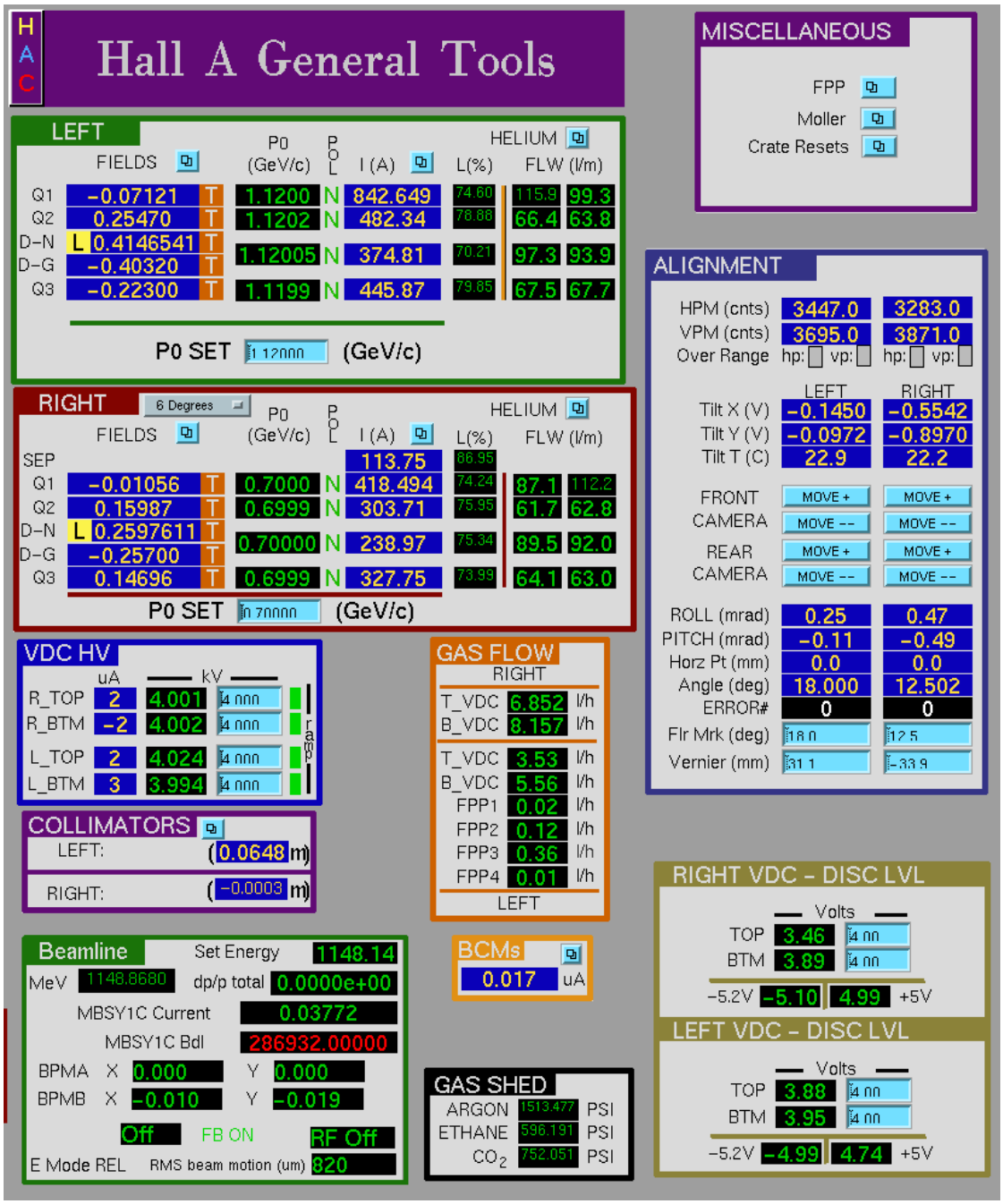

Figure 25.4: Hall A Tools Screen.

Part VII

Data Acquisition and Trigger

Chapter 26

Spectrometer Data Acquisition [1] [2]

The Hall A data acquisition uses CODA [20] (CEBAF Online Data Acquisition), a toolkit developed at Jefferson Lab by the Data Acquisition Group. Up to date information about the Hall A DAQ is kept at [3].

We typically run with two fastbus crates in each spectrometer, plus VME crates for scalers. The fastbus modules are of the following types:

1. LeCroy model 1877 TDCs operating in common–stop with 0.5 nsec resolution for our drift chambers and straw chambers;
2. model 1875 TDCs operating in common–start with 0.1 nsec resolution or 0.05 nsec resolution depending on the setup, for our scintillators and trigger timing;
3. model 1881M ADCs for analog signals from scintillators, Cherenkov, and leadglass detectors.

In some run periods the beam position monitors and raster current were available in a VME system, but presently they are read out in fastbus.

The trigger supervisor is a custom–made module built by the data acquisition group. Its functions are to synchronize the readout crates, to administer the deadtime logic of the entire system, and to prescale various trigger inputs. We have two trigger supervisors, one in each spectrometer. This allows us to run the spectrometers independently if needed.

The public account a-onl is normally used for running DAQ and adaq is used for running other online software including the C++ analyzer Podd. On "adaq" the directory tree of an experiment is adaq/$EXPERIMENT which is organized in subdirectories of various tasks, such as scaler display, Podd, and other online codes, all of which will be described in sections below. The trigger management software is run from the atrig account and is described in the Trigger chapter.

[1] *CVS revision* Id: daq.tex,v 1.10 2008/03/11 21:40:05 rom Exp

[2] Authors: R.Michaels rom@jlab.org

[3] http://hallaweb.jlab.org/equipment/daq/daq_trig.html

26.1 General Computer Information

In the counting room we have various computers for DAQ, analysis, and controls. The controls subnet is the responsibility of J. Gomez and is documented in another chapter. The DAQ computer's names are denoted by adaqlN, where N is a number. adaql1 and l2 are Linux computers for running DAQ while adaql3,4... and higher are for analysis. The Linux PCs are administered mostly by Ole Hansen.

To reboot the Linux machines, first hit Ctrl-Alt-F1 to switch to a text console, then hit Ctrl-Alt-Del to reboot. If power fails for a prolonged time, you must shutdown before the UPS fails.

26.2 Beginning of Experiment Checkout

This section describes the checkout of DAQ and trigger needed before an experiment can start.

1. First ensure that all the fastbus, VME, CAMAC, and NIM crates are powered on. They should boot up in a functional state, except for heavily loaded fastbus crates that sometimes lose their NVRAM. (If that happens, see notes in /adaqfs/halla/a-onl/doc/vmeram.doc).

2. You may download a default trigger, following the directions in the trigger chapter. If the hadron momentum changes you may need to set a new delay. A trigger expert should do the start-of-experiment trigger checklist.

3. Make sure the HV is on for all detectors and that the values are normal.

4. Start the xscaler display following the instructions below and check that the rates from detectors are normal.

5. Startup runcontrol (CODA) using the directions below and start a run. With the trigger downloaded and the HV on, you are taking cosmics data, typically at a rate of 3 Hz per spectrometer. Examine the data using ESPACE or the C++ analyzer. Compare the plots and printouts to normal values.

26.3 Running CODA

This section describes how to run CODA for the spectrometer DAQ. There are two modes: (1) The most common is the "1-Trigger-Supervisor (1-TS)" mode which uses one trigger supervisor and is used for coincidence experiments; and (2) The "2-Trigger-Supervisor (2-TS)" mode which is used for running the two spectrometers independently.

The 1-TS mode can also handle single–arm triggers but is about 1/2 the aggregate speed of the 2-TS mode. When running the 2-TS mode, one uses the a-onl account on adaql2 for one spectrometer and the adev account on adaql1 for the other spectrometer.

The 1-TS mode normally uses the a-onl account on adaql2 only. The information that follows refers to the a-onl account, but the other account is quite similar.

Here is how to start and stop a run. Normally, when you come on shift, runcontrol will be running. If not, see the section on "Cold Start" below. To start and stop runs, push the buttons "Start Run" and "End Run" in the runcontrol GUI. To change configurations use the "Run Type" button. If you have been running you will first have to push the "Abort" button before you can change the run type. Typically the configurations you want are the following.

TWOSPECT – For running the two spectrometers in 1-TS mode.

PEDRUN – To do a pedestal run in 1-TS mode

RIGHTHRS – For R-arm in 2-TS mode

LEFTHRS – For L-arm in 2-TS mode

PEDRUNR – To do a pulser run for R-arm in 2-TS mode

PEDRUNL – To do a pulser run for L-arm in 2-TS mode

A note about pedestal runs. They have the exclusive purpose of obtaining pedestals used for pedestal suppression. For details about what is done and hints for getting pedestals for analysis (which does not want the PEDRUN result), see /ped/README.

26.3.1 Some Frequently Asked Questions about DAQ

- *Q: Where is the data ?* Use a command "find_run 1745" to find where run 1745 has been written on disk and MSS. The data are first written to disks like /adaql2/dataN, N=1,2,3...etc. Files are automatically split if they become bigger than a prescribed limit, the split files have suffixes .0,.1,.2...etc. Files are archived automatically to tape in the MSS tape silo. Two tape copies are made. Data are purged from disk automatically. Users should *never* attempt to copy, move, or erase data.

- *Q: How to adjust prescale factors ?* Edit the file ~/prescale/prescale.dat. One common problem is putting typographical errors here which then leads to no triggers getting accepted.

- *Q: What is the deadtime ?* The deadtime is displayed in the datamon window, which normally is running next to the runcontrol window, but if this window is not up, type datamon to bring it up. This window also shows the full-path-name of the file being written by CODA for the present run.

- *Q: Where are the crates ?* R-HRS has fastbus crates ROC1 and ROC2 on the lower level of the detector hut, and a 9U (tall) VME crate TS0 on the upper level. L-HRS has fastbus ROC3, ROC4 and VME crate TS11.

- *Q: Why is the deadtime so high ? (and related)* Search for answers among the following. The standard lore is that 20% deadtime is tolerable, but you should ask your analysis team to decide. Sometimes people seeing large deadtimes have forgotten to observe that the beam is in pulsed mode. Another possibility is that the workstation is overloaded. The computer used for CODA should not be used for anything else. Do not attempt to read or write rapidly to the same physical disk to which CODA is writing. Sometimes it is observed that the workstation itself is very sluggish. This could be due to a foreign mounted disk having gone away, and there are other possible reasons. If a Cold Start of CODA doesn't solve the problem, you may try rebooting the workstation (see computer section). Also, if the event size changes substantially, e.g. due to VDC or FPP thresholds being turned off (a common mistake), the deadtime as a function of rate will change, especially in the regime of high rates.

26.3.2 Quick Resets

Problems with CODA can usually be solved with a simple reset. If not, try a Cold Start (see next section). Do not waste an hour of beam time on resets; if they fail, call an expert. The expert claims he can restart CODA 90% of the time within 10 minutes.

If a ROC (ReadOut Controller, or crate) is hung up, reboot by going the workspace "Components" and typing reboot. If this doesn't work, try pressing the reset button which is on the "Crate Resets" section of the Hall A General Tools EPICS [14] Gui. Telnet back into the ROC to verify its alive. Then press "Reset" in runcontrol, download and start a new run.

26.3.3 Cold Start of CODA

If CODA is not running, or if it gets hung up, you can do a cold start. Frequently a subset of these steps is sufficient to recover from a hangup, but it takes some experience to realize the minimum of steps that are necessary, so the simplest thing is to do them all, which takes a few minutes.

- Make sure the fastbus and VME crates are running. The crates are usually known by "ROCnumber-computer-(portserver-port)" where ROCnumber is the unique number for that ROC (ReadOut Controller, or crate), computer is the internet name and the portserver-port is the portserver IP and port# where to login. An example might be ROC4-hallasfi4-(hatsv4,port3) which is ROC4, a fastbus crate with IP hallasfi4 attached to the portserver IP hatsv4 at port 3. You would telnet in with the command "telnet hatsv4 2003". You can check if the ROCs are up by looking on the Components work space at the telnet session (if it's not logged, try to telnet in). If the ROCs don't talk to runcontrol, you can type reboot at the arrow prompt (→). If you don't get this arrow prompt, or if you can't telnet in, the computer is hung up, so press the reset button in the "Crate Resets" GUI available from the EPICS screen for Hall A General Tools. After the ROC comes

back (2 minutes), telnet back in to verify it's up. On rare occassions it is necessary to power cycle the crate, which requires access.

- Start runcontrol and the other necessary processes by typing startcoda. Note, startcoda first cleans up old processes for you, so you don't need to take care of that.
- In runcontrol, press the "Connect" button. Wait 5 seconds and press "Run Types". After configure and before download, press the "Reset" button in the upper left corner. Choose the run type from the dialog box (see section on Running CODA for descriptions of run types).
- After you configure and download the Run Type, you can "Start Run" to start a new run.

26.3.4 Recovering from a Reboot of Workstation

If the workstation from which you are running CODA was rebooted, here is how to recover DAQ. Login as the relevant account, which is usually a-onl for 1-DAQ operation. Passwords for the online accounts should be available on a paper on the wall in the counting room, or ask the run coordinator. In the workspace for "Components" telnet into all the ROCs. If the x-terms windows are not available, type setupxterms. Start emacs for the prescale factors: emacs /prescale/prescale.dat. Make sure msqld is running in the process list; it is supposed to start when the computer boots. Then do a Cold Start (see section above).

26.4 Electronic Logbook and Beam Accounting

Two tools are available for logging information by the shift workers: (1) The Electronic Logbook "halog", and (2) The Hall Beam–Time Accounting Table.

The electronic logbook is a web-based repository of logbook data. There are two ways to make entries: One can use the halog GUI (type halog and make your entry), or one may use a script to insert a file. Some data from EPICS and scalers, among other things, are inserted automatically into halog on each start-of-run and each end-of-run. These data also get written into files with the run number in their name in /epics/runfiles. Data appear on the web at a certain URL [4]. It is recommended that one software expert from the experiment be assigned to modify the logging scripts as he or she sees fit.

The Hall Beam–Time Accounting Table is the mechanism to summarize and record how the beam time in a shift was spent. The shift leader is responsible for submitting this table at the end of the shift. When submitted, the data are logged in a database and a summary is e-mailed to various people like the run coordinators and the hall leader. When you come on shift, the GUI is probably already running. If not, you may start it

[4] http://www.jlab.org/~adaq/halog/html/logdir.html

by logging onto adaql1 as the adaq account and type "bta". It is a fairly obvious GUI, but there is also some online help.

26.5 Port Servers

Portservers are devices on the network that allow access to RS232 ports (see Table 26.2). Here is how to connect from a computer: telnet hatsv5 2011 will connect to the portserver at IP hatsv5 and port 11. Note, the offset of 2000 is needed. For dealing with HV, it is best to use a Linux PC for which the keymap is F1 = PF1 and F2 = PF2.

If another person is connected to a certain port, you cannot connect. To bump off another user, login as root with password available from the paper posted on the wall of the counting room (or ask run coordinator) as follows telnet hatsv5 as user = root. At the prompt, type kill tty=4 to clear port 4, then exit. Now you can telnet hatsv5 2004.

26.6 Authorized Personnel

The authorized personnel is shown in table 26.1.

Name (first,last)	Dept.	Call [4]		e-mail	Comment
		Tel	Pager		
Robert Michaels	JLab	7410		rom@jlab.org	*Contact*
Ole Hansen	JLab	7627	584-	ole@jlab.org	Computers

Table 26.1: DAQ: authorized personnel.

server IP	Port	Device
hatsv3	1	vt100 Dumb Terminal
hatsv3	2	ROC1 Lower Fastbus Crate
hatsv3	3	TS0 Trig. Super. VME Crate
hatsv3	4	R-arm Upper HV Crate
hatsv3	5	R-arm Lower HV Crate
hatsv3	8	ROC2 Upper Fastbus Crate
hatsv4	1	vt100 Dumb Terminal
hatsv4	2	ROC3 Lower Fastbus Crate
hatsv4	3	ROC4 Upper Fastbus Crate
hatsv4	5	HV Crate
hatsv4	6	RICH HV Crate
hatsv4	7	RICH VME Crate
hatsv4	14	TS1 Trig. Super. VME Crate
hatsv5	1	vt100 Dumb Terminal
hatsv5	2	e-P Crate 1
hatsv5	3	Moller 1
hatsv5	4	Moller 2
hatsv5	8	Compton ROC3
hatsv5	9	Compton ROC4
hatsv5	10	Compton ROC5
hatsv5	11	Beamline HV
hatsv5	12	e-P Crate 2
hatsv5	13	ARC Energy
hatsv5	14	ROC14 VME Crate
hatsv5	15	ROC15 VME Crate
hatsv12	5	Compton ROC1
hatsv12	6	Compton ROC2
hatsv15	-	2nd Floor Counting Room
hatsv9	4	Parity DAQ Crate

Table 26.2: Port Servers for DAQ

Chapter 27

Trigger Hardware and Software [1] [2]

27.1 Overview

Here we give a brief overview of the hall A trigger, including its hardware arrangement, the logic of the trigger, and the usage of the software control. Diagrams of the hardware layout are shown in accompanying figures.

Scintillators make the main trigger in each spectrometer arm. For coincidence experiments a coincidence is formed between the spectrometer arms. The main trigger is formed by requiring that scintillator planes S1 and S2 both fired (and both phototubes of the paddles that got a hit) in a simple overlap. To repeat, the trigger requires that one paddle in S1 and one in S2 both got a hit in both of their PMTs (4 PMTs total). The coincidence between spectrometers is formed in an overlap AND circuit. The Right Spectrometer singles triggers are called T1, the Left Spectrometer triggers are called T3, and the coincidence triggers are T5. Other triggers might be formed which require other detectors to measure the efficiency of the main trigger. The most important is T2 on R-arm and T4 on L-arm, whose definition has changed over time but typically require 2 out of 3 from among the S1, S2, and Cherenkov detectors (i.e. the "or" of S1 is used, etc).

The Hall A HRS trigger system is remotely configured by CAMAC modules. The main change that can occur during an experiment is in the delays required to adjust the timings of triggers which change with momentum and particle ID relevant for coincidence setup only. Of course for single arm running one may just use the defaults, but it may still be a wise investment in 2 minutes time to download in order to make sure of the state of the modules. If the power is turned off, the CAMAC modules certainly must be reprogrammed. Instructions to download the trigger are given below.

The trigger design is quite flexible and it is relatively easy to add detectors to define new trigger types or to modify existing ones, so long as the detector is fast enough. The trigger supervisor also allows for the possibility of 2nd level triggers which could be used for a later decision.

[1] *CVS revision* Id: trigger.tex,v 1.10 2008/04/28 15:48:22 gen Exp

[2] Authors: R.Michaels rom@jlab.org

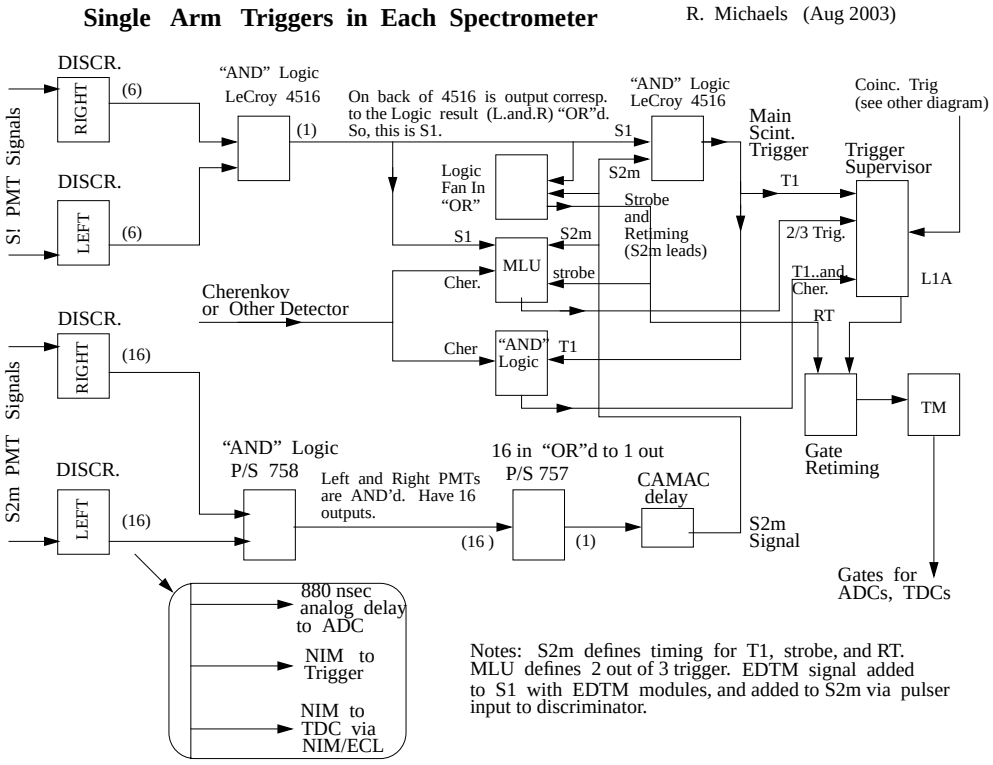

Figure 27.1: Single Arm Trigger Circuit.

27.2 Components

The trigger schematics is shown in Fig. 27.1 and 27.2.

Here we describe the software control of the CAMAC modules involved in the trigger. The software control was written by Tim Smith and Jeff Vieregg of MIT with some input from Bob Michaels. There are four types of modules that are controlled:

1. Discriminators;
2. Delay Units;
3. Memory Lookup Units;
4. AND/OR Modules.

Here are the instructions to download the trigger. First login to the ADAQ Linux box adaql1 or adaql2 (and no others) as atrig account. (E.g. ssh adaql1 -l atrig). The Run Coordinator should know the password. Type trigsetup. A self-explanatory graphical user interface pops up, where if you are in a coincidence experiment setup you must enter the momenta and particle ID's and then press "Download" and WAIT for it to finish and do

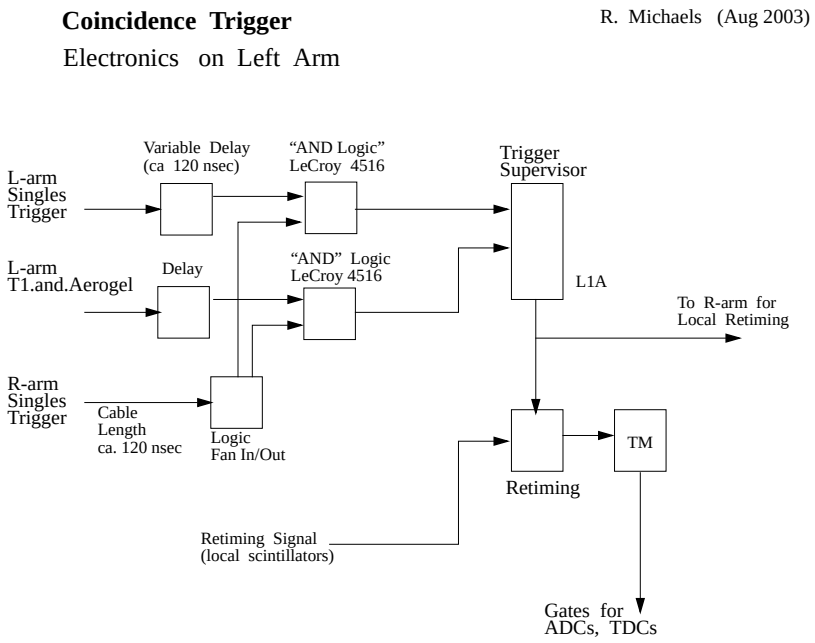

Figure 27.2: Coincidence Trigger Circuit.

not press Ctrl-C. However, for single arm running like Spin Duality or GDH, just press "Download" with the defaults, and WAIT for it to finish and do not press Ctrl-C. The user should look for suspicious error messages in the window from which trigsetup was launched, e.g. to check if connection to the crate is ok.

If individual modules need to be modified for test purposes etc. (e.g. to change thresholds), one may use the expert mode. Login to an ADAQ linux box as explained above, then type trigsetup mapfile where mapfile is the name of the trigger map file. Some examples of map files are in /home/atrig/trigger, see trigger_left.map and trigger_right.map for the left and right spectrometers respectively. These are default databases. One can modify each module on the fly, save the database, etc.

After you download, a record of what was sent is put into a file /home/atrig/trigger/trigger.setup which gets put automatically into the electronics logbook "halog". Also, whenever a CODA run is started, this file is inserted as a special event type 136 at the start of run. This will be the setup IF the download was successful. It is also interesting to know what is actually in CAMAC, but that can only be done in expert mode, and the delays cannot be read from CAMAC. The simplest way to be sure about what is in the trigger is to download again.

27.2.1 Authorized Personnel

The authorized personnel is shown in table 27.1.

Name (first,last)	Dept.	Call [4]		e-mail	Comment
		Tel	Pager		
Robert Michaels	JLab	7410		rom@jlab.org	*Contact*
Alexandre Camsonne	JLab	5064	584-	camsonne@jlab.org	

Table 27.1: Trigger: authorized personnel.

Chapter 28

Online Analysis, Data Checks [1] [2]

The following tools are available for checking data online.

28.0.2 Scaler Display and Scaler Events

Scaler rates and values are displayed using a ROOT based display called xscaler.

Normally this is already running on adaql4 but if it is not running, login as adaq and go to the appropriate directory by typing "goxscaler". Then type ./xscaler there. The scalers are cleared at the beginning of each CODA run. Scalers are read out at approximately 0.5 Hz and injected into the CODA data-stream as event type 140. A file scaler_history.dat is maintained which is a complete history of scaler readings at the end of each run that ended normally. For 1-TS mode, this file is in /adaqfs/halla/a-onl/scaler.

28.1 Analysis using C++ Analyzer

Podd is the main offline software package for analyzing Hall A experiments. This code is documented in a seperate chapter but it is worth mentioning here in a list of essential tools for checking data online.

28.1.1 Responsible Personnel

The responsible personnel is shown in table 28.1.

Name (first,last)	Dept.	Call [4]		e-mail	Comment
		Tel	Pager		
Ole Hansen	JLab	7627	584-	ole@jlab.org	*Contact*
Robert Michaels	JLab	7410		rom@jlab.org	

Table 28.1: Online analysis: authorized personnel.

[1] *CVS revision* Id: online-analysis.tex,v 1.7 2008/03/11 21:40:14 rom Exp

[2] Authors: R.Michaels rom@jlab.org

Part VIII

Offline Analysis Software

Chapter 29

Podd (C++ Analyzer) [1] [2]

The standard offline analysis software for Hall A data is "Podd" (a.k.a. the "C++ Analyzer"), an object-oriented C++ class package developed at Jefferson Lab by Hall A staff. Podd is based on the ROOT [41] programming framework, developed at CERN. All of ROOT's analysis and visualization tools are available from within Podd, plus specialized classes for Hall A physics analysis. The current version of the Podd is 1.5. Detailed information about the software (downloads, documentation, etc.) can be found at

http://hallaweb.jlab.org/root/.

Podd is modular and easily extensible. Individual analysis components are designed as plug-in modules that can be loaded dynamically from an analysis script or otherwise as needed. As a result, the scope of the data analysis is largely user-configurable. Only data from those spectrometers and detectors is analyzed, and only those physics calculations are carried out, that the user specifies. Configuration can occur at run time without any need for recompilation of the program.

Currently supported are the analysis of the Hall A HRS spectrometers, the beamline instrumentation, scaler and EPICS [14] slow control data, and beam helicity information. The event decoder is compatible with the CODA [20] event data format described in the section on Data Acquisition. Decoding of basic helicity information as well as a sophisticated algorithm for decoding and prediction of the G0 helicity sequence is possible. The following detectors can be used in either HRS spectrometer:

- Vertical Drift Chambers (VDCs)
- Scintillators (one or more paddles with up to two PMTs each)
- Cherenkov counters (arbitrary number of PMTs/mirrors, usable for both gas Cherenkovs and aerogels in each HRS)
- Shower counters (shower, preshower, pion rejectors with arbitrary organization in terms of rows and columns of blocks)

[1] *CVS revision* Id: analyzer.tex,v 1.6 2008/05/09 20:44:17 ole Exp

[2] Author: J.-O. Hansen ole@jlab.org

- Total shower counter (combination of a preshower and shower)

The VDC code performs tracking in the focal plane and reconstruction to the target. The tracking algorithm has been shown to be accurate for events with one cluster per plane. Noisy events with higher cluster multiplicity and events with more than one good track in the focal plane may not be reconstructed correctly by the present version of the code, but work is in progress to make this type of analysis also reliable.

The scintillator, Cherenkov, and shower counter classes perform basic decoding, calibration (offset/pedestal subtraction, gain multiplication), and summing (for Cherenkovs) or cluster-finding (for showers) of hits. The cluster-finding algorithm of the shower class is basic and currently only capable of finding a single cluster per event. These classes are largely generic and should be able to accommodate most new detectors of the respective type, even with a different geometry and number of channels.

Several beamline apparatuses are available: a dummy beam (always at zero position and angle), an "unrastered" beam, and a "rastered" beam. BPM and raster detectors are implemented and can be analyzed to obtain the beam position on an event-by-event basis. The BPM code currently only supports standard ADCs (e.g. LeCroy), not the older Struck readout.

Plug-in libraries have been developed by users for the following equipment: the BigBite spectrometer (in several configurations), the neutron detector of the G_E^n experiment (E02-013), the focal-plane polarimeter (FPP) and the ring-imaging Cherenkov counter (RICH), which are optional detectors for the HRS, and the DVCS photon detector. Most of these libraries are available from the Podd web page cited above.

To carry out standard post-reconstruction calculations, the following so-called physics modules are available:

- Single-arm electron kinematics (Q^2, ω etc.)
- Coincidence kinematics (missing energy etc.)
- Deuteron photodisintegration kinematics
- Single-arm elastic scattering kinematics from detected recoil particle
- Coincidence time
- Reaction point (vertex position) reconstruction
- Extended target tracking corrections for the HRS
- Energy loss corrections

There is no limit (other than machine resources) to the number of physics modules that can be configured for an analysis run. Identical modules can be added multiple times with different parameters. For example, one can calculate "electron kinematics" using both uncorrected and energy-loss corrected tracks in one analysis pass without modifying or recompiling any code. For experiments requiring specialized calculations of kinematics or any other quantities, writing a new physics module is the preferred approach.

The results of calculations performed by the various analysis modules (spectrometers, detectors, physics modules) are made available via so-called global variables. Global variables provide access to data via names (text strings). Scalars as well as fixed and variable-size arrays are supported. The global variable names are used in the definition of the analysis output and of logicals.

Tests and cuts ("logicals") can be defined dynamically at run time. They can be used for controlling the analysis flow, keeping statistics, pre-computing logical values to be included in the output, or applying cuts to histograms written to the output. If certain tests fail for a given event, further analysis of that event can be skipped, and the event is not written out. Such tests can be put at the end of all the major stages of the analysis. This allows making decisions about an event early in the analysis, improving performance. A summary of all test results is written to a file at the end of the analysis.

Data of interest can be histogrammed and/or written to a ROOT Tree in the output file. The contents of the output is defined dynamically at the beginning of the analysis. Both 1- and 2-dimensional histograms are supported. Histograms can be filled selectively using logical expressions (cuts).

Table 29.1 lists the analysis modules available in version 1.5 of Podd.

29.1 Running Podd

Precompiled binaries of the latest version of the Podd are installed on the Hall A counting house analysis machines (adaql1–10). To run Podd, log into any standard account on these computers, for example as adaq, and type

```
analyzer
```

As installed, Podd uses the default database in the location pointed to by the environment variable DB_DIR. The Hall A staff makes an effort to keep this database reasonably up-to-date for completed experiments. If you wish to analyze older data, the default database might work for you. However, if you wish to use a customized set of database files specific to your experiment (usually the case for the current experiment), you will need to re-define DB_DIR to point to the location of that database before starting the Podd. For details on the database, see Section 29.3.

The pre-installed Podd may not work if the PATH and/or LD_LIBRARY_PATH variables have been changed from the system defaults. If this is the case, you should correct the login script(s) of the problematic account. To restore the system defaults, you may execute one of the following commands:

```
For csh/tcsh shells:    source /adaqfs/apps/env/login.adaq
For bash shells:        source /adaqfs/apps/env/profile.adaq
```

If Podd is to be used outside of the Hall A counting house environment, it is currently necessary to build the program from source. A `tar` archive of the sources can be obtained from the following location

Class name	Description
Apparatuses	
THaHRS	HRS spectrometer (left or right) with VDC ("vdc") and two scintillator planes ("s1", "s2").
THaIdealBeam	Dummy beam with zero position and angle.
THaRasteredBeam	Beam with raster
THaUnrasteredBeam	Beam without raster (for calibration)
THaDecData	Miscellaneous decoder raw data
Detectors	
THaVDC	VDC package for HRS
THaScintillator	generic scintillator
THaCherenkov	generic Cherenkov (gas or aerogel)
THaShower	generic shower counter
THaTotalShower	combination of preshower and shower
THaBPM	beam position monitor with standard ADCs
THaRaster	beam raster system
THaHelicity	beam helicity information (in-time or delayed)
Physics Modules	
THaReactionPoint	vertex position (intersection of spectrometer track with beam)
THaTwoarmVertex	vertex position (intersection of two spectrometer tracks)
THaAvgVertex	vertex position (average of reaction points from two spectrometers)
THaElectronKine	single-arm electron kinematics
THaPrimaryKine	single-arm kinematics for particle with arbitrary mass
THaSecondaryKine	coincidence kinematics
THaPhotoReaction	deuteron photodisintegration kinematics
THaSAProtonEP	elastic $A(e,A)e'$ kinematics from detected A
THaExtTarCor	extended target corrections
THaCoincTime	coincidence time calculation
THaS2CoincTime	coincidence time using S2 scintillator in HRS
THaGoldenTrack	selects Golden Track from multiple reconstructed tracks
THaDebugModule	prints values of global variables for each event and waits

Table 29.1: Analysis modules available in version 1.5 of Podd

http://hallaweb.jlab.org/root/download.

29.2 Preparing Analysis of a New Experiment

Setting up offline analysis for a new experiment typically involves the following steps:

1. Determine the experimental configuration (spectrometers, detectors, beamline) to be analyzed and identify the corresponding analysis modules.

2. Create a database for the new experiment, using the start date of the data taking as the time-stamp for new new entries (see Section 29.3). At the minimum the database should contain up-to-date detector map entries for every detector and rough starting values for the spectrometer reconstruction matrix elements and VDC timing offsets. Often this information can be carried over from a previous experiment with only minor modifications. Also, enter any other calibrations and geometry data that are available, even if approximate.

3. In the database, create initial run database values. These are typically the starting beam energy and spectrometer momentum and angle settings. If the experiment is already completed, extract the history of these settings from logs and enter them into the database. These values affect the kinematics calculations; they are not important for detector checkout.

4. Determine which physics calculations are needed for the offline analysis and identify corresponding Physics Modules.

5. Identify desired output histograms and tree variables. Create an output definition file. The file $ANALYZER/examples/output_example.def contains most of the necessary documentation.

6. If desired, create a definition file for logicals. An example generating detailed VDC statistics is given in $ANALYZER/examples/cuts_example.def.

7. Write a CINT[3] script that sets up the configuration identified in Step 1 and the physics analysis decided on in Step 4. Often, a script from a previous experiment, or one of the examples in the directory $ANALYZER/examples, can serve as a guide. The script usually also locates raw data files, creates one or more THaRun objects, configures various options of the event loop object THaAnalyzer, and starts the replay. In particular, the names of the output file, the output definition file, and the logicals definition file must be given to THaAnalyzer.

8. Identify the plots that you wish to generate from the analysis results and write a script to create them. This may be part of the script created in the previous step. Note that there is no need to quit Podd and start a new session or another program

[3]CINT is a C/C++ interpreter that acts as the interactive interface to ROOT and Podd.

after completion of the analysis; all of ROOT's visualization tools are available from within Podd.

29.3 Database Files and Directories

Version 1.5 of Podd uses simple ASCII text files to store database information. There is usually one file for each analysis module. The name of each file is composed as follows:

db_apparatusname.detectorname.dat

For example, a Cherenkov detector named "a1" which is part of the Left HRS spectrometer, named "L", would be associated with a database file named db_L.a1.dat.

The "run database", which contains global run-specific parameters such as beam energy and spectrometer momentum and angle settings, is stored in a special file named db_run.dat.

All of the above database files should be stored in a location that can be modified by the user, for instance in ~/DB. **The environment variable DB_DIR must be defined to point to this top-level database directory.** Since database parameters change with time, database files are organized in time-dependent subdirectories within $DB_DIR. The name of each subdirectory has the form YYYYMMDD, where YYYY, MM and DD represent the year, month, and day, resp., of the date that is the start of the validity of the entries. Upon initialization, Podd locates the most appropriate time-dependent subdirectory based on the contents of $DB_DIR and the time-stamp of the run to be replayed. Often there is only one time-dependent subdirectory per experiment, but if significant changes occur during an experiment, it may be appropriate to create several directories. A finer division of time-dependent information can be provided by timestamps within each database file. This is especially true for the run database file which frequently will have many time-stamped sections.

For example, an experiment running in April and May of 2004 would create a database subdirectory ~/DB/20040401 and set DB_DIR= ~/DB. Other files supporting the replay of this experiment would reside in an experiment-specific directory, usually $EXPERIMENT.

29.4 Program Design Overview

Spectrometers (and similar major installations) are abstracted in an Apparatus class hierarchy, while individual detectors belong to a Detector class hierarchy. Apparatuses are collections of detectors that are analyzed in a particular way. Specialized physics analysis, such as kinematics calculations, vertex determination, and energy loss corrections, can be done in Physics Modules. All three types of objects, Apparatuses, Detectors, and Physics Modules, are kept in lists that are processed during replay. In setting up the replay, it is up to the user which objects to place in the lists.

Both the Apparatus and the Detector class hierarchies, as well as the Physics Modules, inherit from a common base class, THaAnalysisObject. Physics Modules currently do not use a particular class hierarchy; all physics modules inherit from THaPhysicsModule, which in turn inherits from THaAnalysisObject.

The behavior of existing analysis modules can be modified or extended easily by using class inheritance. In such a case, the only code that needs to be written is the implementation of the new feature. For example, the standard Cherenkov detector class currently only calculates the total sum of ADC amplitudes. For a new type of Cherenkov counter, or to do a more sophisticated analysis of the standard Cherenkov detectors, one might want to calculate separate ADC sums for certain groups of PMTs. To do so, one would write a new class inheriting from the standard Cherenkov class, which could contain as little as one function, performing the additional calculations, and the corresponding data members. New types of detectors and even entire spectrometers, as well as new types of physics calculations, can be added similarly easily, again using class inheritance. No change to and no rebuilding of the core program is necessary to support such new modules.

29.4.1 Responsible Personnel

The responsible personnel shown in table 29.2.

Name (first,last)	Dept.	Call [4]		e-mail	Comment
		Tel	Pager		
Ole Hansen	JLab	7627	584-	ole@jlab.org	*Contact*
Robert Michaels	JLab	7410		rom@jlab.org	
Alexandre Camsonne	JLab	5064	584-	camsonne@jlab.org	

Table 29.2: Offline analysis: authorized personnel.

Part IX

BigBite Spectrometer

Chapter 30

BigBite Magnet [1]

30.1 Overview

The BigBite magnet, the key component to several Hall A approved experiments, was commissioned to 550 A under TOSP PHY-04-014 and subsequently to 800 A under TOSP PHY-05-015. The purpose of this document is to describe the hazards and safety procedures for operating this magnet. These procedures include running the magnet during an experiment and making field measurements. The BigBox power supply being used with BigBite was commissioned during Hall A experiment E99-114 (TSOP PHY-02-003) and this document presents the same procedures for safely operating the supply. This BigBite dipole magnet document is an update to the expired OSP PHY-05-001 and OSP PHY-08-002. under which the BigBite dipole was run for the past several years. This document does not attempt to describe the function or operation of the dipole or power supply.

30.2 Description of Magnet

Hall A BigBite experiments will make use of a large-acceptance dipole magnet to deflect charged particles into the various BigBite detector packages. The BigBox power supply will be used to energize this magnet. The power supply has previously been tested and was successfully used during the Hall A RCS experiment (E99-114). The control software of the supply runs from the HAC computer with the BigBox GUI. The first BigBite experiment (E01-015) ran the magnet at an excitation of 0.92 T which required 518 A with the maximum current limited to 550 A. Subsequently, after the successful completion of a high current commissioning under TOSP PHY-05-015, the limited was raised to 800 A.

[1]Author: D. W. Higinbotham doug@jlab.org

30.3 Authority and Responsibility

30.3.1 BigBox Power Supply

Only authorized personnel may enable the power supply as per the operating guidelines described in Section 30.7.1. To become authorized one must:

- Read and understand this document.
- Read and understand Chapter 6440 of the Jefferson Lab EH&S Manual on Static Magnet Fields.
- Complete JLab Lock and Tag Training (SAF104)
- Complete NFPA-70E Electrical Safety Training (SAF603)
- Complete training on power supply operation by authorized Hall A technical staff.
- Obtain an authorizing signature from the BigBite contact person, Douglas Higinbotham, on the attached signature sheet.

30.3.2 Energizing the BigBite Magnet

Once the BigBox power supply has been enabled, the BigBite magnet can either be controlled locally or with the BigBox GUI. Shift workers will only be allowed to control the magnet via the BigBox GUI and only after they have read and signed the COO of the experiment for which they are taking shift. One shall immedately turn off the magnet via the BigBox GUI or locally at the BigBox supply if someone unauthorized and/or unknown is seen entering the magnet area or any hazard, e.g. leaking low conductivity water, is identified.

30.3.3 Magnetic Field Measurements

With the written permission of the Hall A work coordinator, physics users may make field measurements of the area around the magnet. The guidelines for safely performing these measurements can be found in Section 30.7.3. During these measurements, the current to the magnet may be changed using the BigBox GUI. Once the measurements have been completed, authorized personnel secure the system as per Section 30.7.4.

30.4 Location of Equipment

All required equipment is located in Hall A. During operation, the BigBite magnet will be located near the pivot area and the BigBox power supply is located near the Hall A control racks.

30.5 Hazard Analysis

The hazards associated with the magnet and power supply are electrical, magnetic, and fire.

Electrical: The power supply has a maximum output current of 1050 A at a voltage of 250 V and thus presents a potentially lethal hazard. A hazard also arises from the power bus on the magnet itself.

Magnetic: The magnet produces a central field of 0.92 T at 518 A. As the magnet has a return yoke and a front field clamp, the external field is much smaller than the central field. Although the magnetic field is primarily confined to the magnet gap, fringe fields are strong enough to accelerate unsecured metal objects in the vicinity of the magnet. In addition these fields may present a particularly large hazard to individuals using a pacemaker. An additional hazard arises due to the close proximity of the magnet to the target area where an unsecured metal object could destroy the scattering chamber.

Fire: There exists a potential fire hazard with high current power supplies.

30.6 Hazard Mitigation

Electrical: Access to the power supply or magnet can only be made after following "Lockout/Tagout Procedures" as described in Chapter 6110 of the Jefferson Lab EH&S manual and the *Hall A power supply test and maintenance* safety procedure. When working on the power supply, the responsible people will follow the guidelines in the electrical safety chapter of the EH&S manual. Before being energized, the magnet's exposed current bus must be covered to mitigate the shock hazard. The power supply bus must be covered and all doors secured. Also, to keep the current of the BigBite magnet within operational limits, the over-current circuit in the BigBox power supply should be set to no more than 800 A.

Magnetic: The possible presence of high magnetic fields will be indicated by standard Jefferson Lab signs and by a flashing beacon. The area surrounding the magnet will be roped off whenever it is possible that the magnet will be energized. The ropes will be at a distance from the magnet such that the fringe fields are less than 500 μT (5 G) at the maximum allowed current of 800 A. This should be roughly one meter, but should be checked as soon as possible once the magnet has been energized. Personnel with ferromagnetic implants and those wearing electronic medical devices are not allowed inside the roped off area. Due to the large magnet gap size, personnel working inside the roped-off area should be aware of the possible presence of a magnetic fringe field, as well as a high field in the magnet gap.

Fire: The magnet coils are protected from over-heating by Klixon devices installed on the magnet and interlocked to the power supply that will shut off the power supply in case of the coil over-heating.

30.7 Operating Guidelines

30.7.1 Testing the BigBite Magnet After Installation

Once the BigBite magnet has been installed and connected to the BigBox power supply, it should be tested to ensure that it is working properly.

- At least two qualified persons must be working on the task together.
- Rope off the area around the magnet.
- Install protective covers as needed over the target windows and the spectrometer sieve slit. Check with the Hall A work coordinator to ensure proper covers are used.
- Sweep the area inside the ropes for magnetic material. Make sure that the area is clean, and that no foreign objects are in or near the aperture of the magnet or the inside of the stay-clear zone. All such materials must be removed and placed outside of the ropes.
- Make sure all protective barricades, signs and beacons are in place to warn of possible exposure to magnetic and electrical hazards.
- Verify all covers on energized conductors on the magnet are securely in place.
- Verify all power supply doors and cabinets are closed and locked.
- Check that the cooling water is turned on. Valves on the magnet and on individual cooling paths must all be open.
- Verify that water flow is present. The flow switches on the supply and return lines must be open and the the supply pressure must be verified to be 50 psi greater than the return pressure.
- Turn on the flashing beacons.
- Remove the administrative lock on the power supply disconnect switch. Make sure the Jefferson Lab's Lockout/Tagout procedures, as described in Chapter 6110 of the Jefferson Lab EH&S manual are followed. Make sure your Lockout/Tagout training is up-to-date, you have been trained on the operation of the power supply and magnet and that you have been authorized by Douglas Higinbotham.
- Enable main power on the power supply and ramp output current at the rate of approximately 10 A per second to 50 A. Check that all controls and safety features are operational then continue to ramp at the rate of 10 A per second to the maximum current.
- Enter record of the successful test into a Hall A electronic log book.

30.7.2 Enabling the BigBite Magnet For Physics

- At least two persons must be working on the task together.
- Rope off the area around the magnet.
- Sweep the area inside the ropes for magnetic material. Make sure that the area is clean, and that no foreign objects are in or near the aperture of the magnet or the inside of the stay-clear zone. All such materials must be removed and placed outside of the ropes.
- Make sure all protective barricades, signs and beacons are in place to warn of possible exposure to magnetic and electrical hazards.
- Verify all covers on energized conductors on the magnet are securely in place.
- Verify all power supply doors and cabinets are closed and locked.
- Check that the cooling water is turned on. Valves on the magnet and on individual cooling paths must all be open.
- Verify that water flow is present — checking that the differential pressure is greater than 50 psi and look at flow switches (inlet pressure should be greater than 100 psi).
- Turn on the flashing beacons.
- Remove the administrative lock on the power supply disconnect switch. Make sure the Jefferson Lab's Lockout/Tagout procedures, as described in Chapter 6110 of the Jefferson Lab EH&S manual are followed. Make sure your Lockout/Tagout training is up-to-date, you have been trained on the operation of the power supply and magnet and that you have been authorized by Douglas Higinbotham.
- Enable main power on the power supply and check the current can be set with the BigBox GUI by ramping the magnet to 50 A.
- Set the magnet to 0 A and submit a electronic log entry that magnet is ready and that Hall A shift workers now can control the magnet via the BigBox GUI.

30.7.3 Magnetic Field Measurements

With the Hall A work coordinator's written authorization, a map of the magnet's fringe field can be made. During magnetic field measurements, the covers should be on the scattering chamber. All work in the vicinity of the magnet must conform to the practice described in Chapter 6440 of the Jefferson Lab EH&S manual. In particular all workers must respect the limits shown in the table "exposure limits for static magnetic fields" of that chapter and reproduced below.

Ferromagnetic implant and electronic medical device wearers	Routine 8 Hour Average Routine Exposure Not Recommended	Maximum Allowable 0.5 mT (5 G) or as determined by a physician
Regular Employees	Whole Body: 60 mT (600 G) Limbs: 600 mT (6000 G)	Whole Body: 2 T (20,000 G) Limbs: 5 T (50,000 G)

The first field measurements should be made around the 1 meter perimeter to make sure the fringe is less than 5 G at this location. Measurements closer to the magnet and in the gap of the magnet can be made as long as the limits in the table are adhered to and a description of the planned measurement points has been presented to Douglas Higinbotham for approval. A hand-held Lake Shore field measurement device is avaliable from Douglas Higinbotham for establishing the 5 G perimeter and making measurements to 0.1 G precision.

30.7.4 Turning Off The BigBox Supply

The magnet power supply should always be locked out when the magnet is not going to be used for any extended period.

- Ramp output current to zero and turn off main power at the power supply.
- Apply the administrative lock to the power supply.
- Turn off the flashing beacons.

30.7.5 Before Moving BigBite

Before moving the BigBite magnet (e.g. changing the angle of the spectrometer which must be done locally), the power supply must be turned off as per Section 30.7.4.

30.8 Authorized Personnel

Only Hall A technical staff are authorized to enable the main power supply and require proper electrical safety training. Shift workers are only allowed to control the BigBite power supply via a GUI.

Chapter 31

BigBite Rotation [1]

31.1 Overview

The BigBite system is rotated using either a hand operated or an electric wench. Rotation can only be done locally and needs to be done only after careful inspection that the nothing will be pulled or damaged by the rotation. This included not only the cables attached to BigBite, but also items around BigBite or that may have inadvertently been attached to BigBite. Care most also be taken to move the hundreds of cables that are connected between BigBite and the DAQ.

31.2 Location of Equipment

All required equipment is located in Hall A. During operation, the BigBite magnet will be located near the pivot area and the BigBox power supply is located near the Hall A control racks.

31.3 Hazard Analysis

The hazards associated with the rotation of BigBite include:
Hands During rotation, hands and/or figures could get caught in the wench chain.
Collisions During a rotation, it is possible for BigBite to collide with other items in the Hall. Along with collisions, items can also be pulled by BigBite.
DAQ Cables: There are several hundred cables that go between BigBite and the DAQ. These can easily be damaged during a BigBite rotation.
Electrical: The power supply has a maximum output current of 1050 A at a voltage of 250 V and thus presents a potentially lethal hazard. A hazard also arises from the power bus on the magnet itself.

[1]Author: D. W. Higinbotham doug@jlab.org

Magnetic: The magnet produces a central field of 0.92 T at 518 A. As the magnet has a return yoke and a front field clamp, the external field is much smaller than the central field. Although the magnetic field is primarily confined to the magnet gap, fringe fields are strong enough to accelerate unsecured metal objects in the vicinity of the magnet. In addition these fields may present a particularly large hazard to individuals using a pacemaker.

31.4 Hazard Mitigation

Hands During rotation, the operator of the wench shall keep their hands away from the wench during operation. The electric wench that we use has a several foot control cord on it, so one does not need to have their hands near the wench during operation.
Collisions

To avoid collisions of BigBite with other equipment, careful inspection much be made of the area. In particular, one needs to out only watch-out for items that BigBite it moving toward, but also check for items being pulled. In particular, watch out for items that may have inadvertently been attached to BigBite. Fig. 31.1 shows a real world example of a rope having been placed between BigBite and a pipe and not being found before a rotation.
Electrical: The BigBite magnet should be de-energized during rotations and workers should be mindful to watch that no cables are being damaged by the rotation. No one should be near the magnet's power bus during a rotation.
DAQ Cables: There are several hundred cables that go between BigBite and the DAQ. These need to be moved along with BigBite by hand and people need to take care that they are not damaged during the rotation.
Magnetic: The BigBite magnet should be de-energized during rotations.

31.5 Operating Guidelines

- At least two qualified persons must be working on the task together.
- Check area for any potential collisions or attachments.
- One person should be helping to move BigBite cables while the other is operating the wench.
- Enter record of the rotation into the Hall A electronic log book.

31.6 Authority and Responsibility

The wench may be operated by the Hall A technical staff and people who have been train by the staff on the use of the wench. Anyone who has completed the Hall A safety walk-through may act as an observer and help move the BigBite cables along.

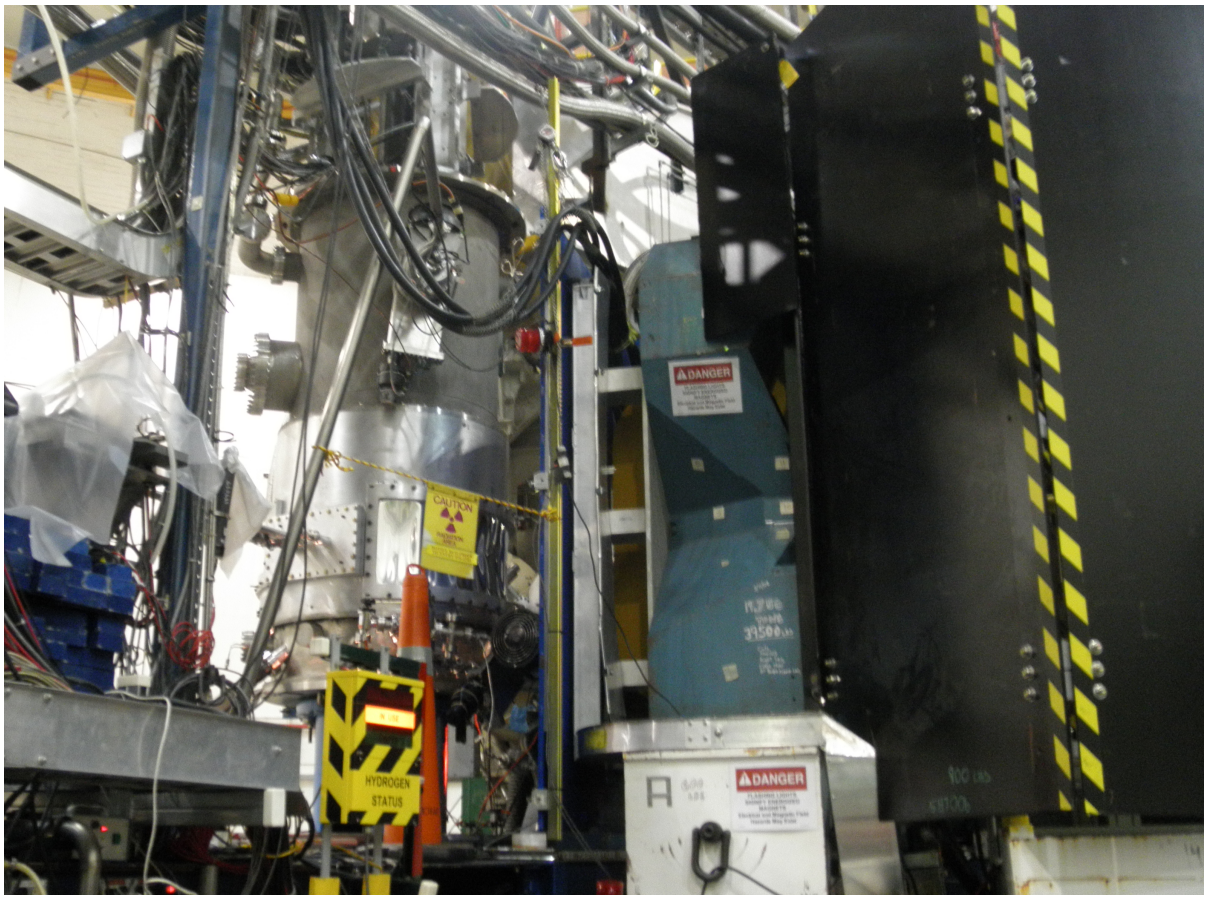

Figure 31.1: Photo of damage caused by failure to find a rope that had been attached between BigBite and a pipe.

Bibliography

[1] CVS (Concurrent Versions System) WWW page. http://www.cvshome.org/.

[2] Hall A Collaboration. *Hall A SAD, OSP subdocument (info level 0).* URL http://www.jlab.org/~gen/osp/sad.pdf.

[3] J. Alcorn et al. Basic Instrumentation for Hall A at Jefferson Lab. *Nucl. Instrum. Meth.*, (TBD), 2003. URL http://hallaweb.jlab.org/equipment/NIM.pdf.

[4] Jefferson Lab, (12000 Jefferson avenue, Newport News, VA 23606). URL http://www.jlab.org. Telephone numbers: (757)-269-XXXX, Pager numbers: (757)-584-XXXX.

[5] JLab. *Radiation Worker I (RW-I) Training.* URL http://www.jlab.org/accel/RadCon/training.html.

[6] JLab. *Personnel Safety System (PSS) manual.* URL http://www.jlab.org/accel/ssg/user_info.html.

[7] JLab. *EH&S Manual.* URL http://www.jlab.org/ehs/EHSbook.html.

[8] JLab. *EH&S Manual: Appendix 6310-T2.* URL http://www.jlab.org/ehs/manual/EHSbook-438.html.

[9] JLab. *RadCon Manual.* URL http://www.jlab.org/accel/RadCon/JLAB_RadCon_Manual.pdf.

[10] JLab. *Oxygen Deficiency Hazard (ODH) training.* URL http://www.jlab.org/accel/safetylb/odhcover.html.

[11] JLab. *Hall A Safety Awareness.* URL http://hallaweb.jlab.org/document/safety/walkthrough.html.

[12] *Accelerator Operations Directive.* URL http://opsntsrv.acc.jlab.org/ops_docs/online_document_files/ACC_online_files/accel_ops_directives.pdf. *URL is available inside JLab site.*

[13] JLab. *Machine Protection System (MPS) manual.* URL http://www.jlab.org/accel/ssg/mps/MPS_home.html.

[14] EPICS Documentation. WWW page. URL http://www.epics.org/. see also http://www.aps.anl.gov/asd/controls/epics/EpicsDocumentation/WWWPages/EpicsDoc.html.

[15] J. Heefner and W. Barry. Beam Position Measurement in the CEBAF Recirculating Linacs by use of Pseudorandom Sequences. Technical report, CEBAF, PR-90-009, 1990. URL http://www.jlab.org/div_dept/admin/publications/papers/90/PR90-009.pdf. *URL is available inside JLab site.*

[16] C. Hyde-Wright et al. Beam Position Studies for E93050. private communication.

[17] T. Powers. private communication.

[18] MEDM documentation. WWW page. URL http://www.aps.anl.gov/asd/controls/epics/EpicsDocumentation/ExtensionsManuals/MEDM/MEDM.html.

[19] CEA Saclay, F-91191 Gif-sur-Yvette, France. URL http://www-dapnia.cea.fr/Sphn/. Telephone number, from US: 9-011-33-1-6908-XXXX.

[20] CODA documentation. WWW page. URL http://coda.jlab.org/.

[21] PAW Documentation. WWW page. URL http://wwwasd.web.cern.ch/wwwasd/paw/.

[22] C. Y. Prescott. Spin Dependent Compton Scattering for Use in Analyzing Electron Beam Polarizations. Technical report, SLAC TN-73-1, 1973. *SPIRES entry.*

[23] R.D. Mc Carty. Hydrogen Technology Survey: Thermophysical Properties. Technical Report N76-11297, NBS, 1975.

[24] W. Schmitt and C. Williamson. Boiloff Rates of Cryogenic Targets Subjected to Catastrophic Vacuum Failure. Technical Report 90-02, Bates Internal Report, Sept 1990.

[25] F. Duncan K. McCormick and J. Goity. *A User's Guide to the Hall A Cryotarget Control System.* Jefferson Lab Hall A, Sept 1997. URL http://hallaweb.jlab.org/equipment/targets/cryotargets/control.html.

[26] transversity WWW page. http://hallaweb.jlab.org/experiment/transversity.

[27] N. Voegler and J. Friedrich. A background-free oxygen target for electron scattering measurements with high beam currents. *Nucl. Instrum. Meth.*, 198:293–297, 1982. *DOI server.*

[28] F. Garibaldi et al. A Waterfall target for electron scattering experiments. *Nucl. Instrum. Meth.*, A314:1–8, 1992. *SPIRES entry*, *DOI server.*

[29] L. Bartoszek et al. The E760 lead glass central calorimeter: Design and initial test results. *Nucl. Instrum. Meth.*, A301:47–60, 1991. *SPIRES entry*.

[30] J. A. Appel et al. Performance of a lead glass electromagnetic shower detector at fermilab. *Nucl. Instrum. Meth.*, 127:495, 1975. *SPIRES entry*.

[31] Photonis Industries Inc. WWW page. URL http://www.photonis.com.

[32] Burle Industries Inc. WWW page. URL http://www.burle.com/.

[33] E. J. Brash et al. Operational performance of the Hall A mirror aerogel Cerenkov counter. *Nucl. Instrum. Meth.*, A487:346–352, 2002. *SPIRES entry*.

[34] C. Lippert et al. Particle Discrimination in Medium-Energy Physics with an Aerogel Cerenkov Detector. *Nucl. Instrum. Meth.*, A333:413–421, 1993. *SPIRES entry*.

[35] L. C. Alexa et al. Empirical tests and model of a silica aerogel Cerenkov detector for CEBAF. *Nucl. Instrum. Meth.*, A365:299–307, 1995. *SPIRES entry*.

[36] G. J. Lolos et al. Performance and design characteristics for the Hall A aerogel Cerenkov counters. *Nucl. Instrum. Meth.*, A385:403–411, 1997. *SPIRES entry*.

[37] S. Beole et al. Alice technical design report: Detector for high momentum pid. CERN-LHCC-98-19, http://consult.cern.ch/alice/Documents/1998/01/HMPID/tdr.html.

[38] F. Garibaldi et al. The hall a rich detector. Hall A Status Report 2001. http://hallaweb.jlab.org/publications/StatusReports/StatusReport2001.pdf.

[39] HAWGS WWW page. http://hallaweb.jlab.org/document/HAWGS/HAWGS_OpMan.html.

[40] H. Fenker. WWW page. http://hallaweb.jlab.org/document/HAWGS/HAWGS_OpMan.html#Heading38.

[41] CERN. *ROOT Package*. URL http://root.cern.ch.