CEBAF Tech Notes

TITLE	TN# 94-001
Absolute Beam Energy Determination at CEBAF	DATE 1/5/94

AUTHOR(S) P.E. Ulmer, I. Karabekov, A. Saha, P. Bertin & P.Vernin

KEYWORD(S)

- [ ] Accelerator Physics
- [ ] Arc
- [ ] Beam Dynamics
- [ ] Beam Transport
- [ ] BSY
- [ ] Civil Construction
- [ ] Commissioning
- [ ] Controls
- [ ] Cost
- [ ] Cryogenics
- [ ] DC Power
- [x] Diagnostics
- [ ] Environment, QA
- [x] Experimental Equipment
- [ ] Extraction
- [ ] Failure Mode/Tests
- [ ] Front End
- [ ] Injector
- [ ] Installation
- [ ] Integration
- [ ] Linac
- [ ] Magnets
- [x] Nuclear Physics
- [ ] RF
- [ ] Safety and Health Physics
- [ ] Schedule
- [ ] SRF
- [ ] Test Results
- [ ] Vacuum
- [ ] Other

ABSTRACT

This document briefly reviews some of the techniques which have been suggested as candidates for a 10^{-4} absolute energy determination in CEBAF's Hall A. In September there were a series of meetings at CEBAF devoted to evaluating these methods with the goal of deciding which ones merit further study. There was a consensus that several methods should be pursued if they appear feasible in order to provide consistency checks on each other. There are currently four methods which are being pursued in HallA. This document lists technical concerns with each of these methods. The responses of the proponents of the various methods are also included along with subsequent comments and discussion. The document also briefly describes other methods which have been suggested. Finally, this document only deals with the technical aspects of the various techniques and does not address cost issues.

CEBAF Technical Notes are informal memos intended for rapid internal communication of work in progress. Of necessity, these notes are limited in their completeness and have not undergone a prepublications review.

STANDARD DISTRIBUTION

Dir. Office
MS 12C
H. Grunder

Accel. Div.
MS 12A1
J. Boyce
Y. Chao
D. Engwall
R. Kazimi
J. Kewisch
R. Li
H. Liu
R. May
L. Merminga
R. Rossmanith
M. Tiefenback
J. van Zeijts
B. Yunn
MS 12A2
J. Bisognano
D. Douglas
A. Hutton
R. Johnson
G. Krafft
C. Leemann
G. Neil
D. Neuffer
C. Rode
C. Sinclair
AccD File
MS 15A
P. Kloeppel
K. Mahoney
J. Perry
H. Robertson
A. Silva
B. Smith
MS 16A
D. Arenius
G. Biallas
B. Chronis
K. Crawford
J. Denard
E. Feldl
J. Fugitt
A. Guerra
L. Harwood
C. Hovater
R. Johnson
K. Jordan
I. Karabekov
A. Krycuk
Z. Li
C. Liang
P. Liger
E. Martin
S. McGuire
R. Nelson
M. O'Sullivan
W. Oren
S. Simrock
D. Wang
P. Ward
MS 28H
T. Hassler
MS 34A
J. Parkinson
MS 59
J. Lehman
MS 90A
R. Flood
MS 58B
J. Benesch
S. Benson
R. Campisi
L. Doolittle
M. Drury
F. Dylla
P. Hunt
P. Kneisel
D. Machie
V. Nguyen
L. Phillips
T. Powers
J. Preble
C. Reece
B. Schneider
J. Susta
J. VanDyke
M. Wiseman
SRF Library
MS 85A
B. Bowling
S. Schuh

AD Tech Perf.
MS 12A3
R. Sundelin
MS 28H
C. Ficklen

Physics Div.
MS 12H
J. Domingo
W. Brooks
V. Burkert
L. Cardman
R. Carlini
B. Mecking
S. Nanda
A. Saha
R. Whitney
Physics Div. File
MS 16B
P. Brindza
J. O'Meara

Proj. Mgmt.
MS 16C
B. Hartline
P. Lindquist

Library (15 copies)
(MS 28E)

Rev. 11/22/93

CEBAF
0205 9100 005 093 3

Absolute Beam Energy Determination at CEBAF

CONTENTS

1 Required Accuracy 4

2 Main Methods Being Considered 7

2.1 Elastic ep Scattering 7

2.1.1 Overview 7

2.1.2 Detector geometry and requirements 8

2.1.3 The target and measurement time 9

2.1.4 Comments and technical concerns 9

2.1.5 Summary 11

2.2 Angle Measurement in the Arcs 11

2.2.1 Overview 11

2.2.2 Measurement of the bend angle 12

2.2.3 Measurement of the field integrals 12

2.2.4 Technical concerns 13

2.2.5 Summary 18

2.3 Chicane 18

2.3.1 Overview 18

2.3.2 Required accuracies 19

2.3.3 Technical Concerns 20

2.3.4 Summary 22

2.4 Synchrotron Radiation Measurement 22

2.4.1 Overview 22

2.4.2 Technical Concerns 22

2.4.3 Summary 32

2.4.4 Summary Response by I. Karabekov 32

3 Other Methods 34

3.1 Compton Scattering 34

3.2 Møller Scattering 36

3.3 Spin Precession 37

4 Recommendations 41

5 Appendix: Synchrotron Radiation Calculation 43

6 References 44

1. Required Accuracy

The accuracy required in the measurement of the beam energy for the CEBAF Hall A experimental program is documented elsewhere.[1] Here the requirements are briefly reviewed to provide a context for the present discussion.

Currently, the accuracy requirement on the beam energy is motivated largely by experiments involving separation of various response functions. This is primarily because of the typically large error magnifications in extracting response functions from measured cross sections. The various response functions are extracted by taking linear combinations of cross sections measured under different experimental conditions (kinematics, beam polarization, *etc.*). For small response functions, this combination results in a near cancellation of relatively large numbers. Thus, to control the systematic errors on these response functions, one must have accurate knowledge of the cross sections from which they are extracted.

For L/T separation experiments with uncertainties $\delta\sigma_f$ and $\delta\sigma_b$ in the forward and backward angle cross sections (σ_f and σ_b) the fractional error in R_L is

$$\frac{\delta R_L}{R_L} = \frac{1}{r\Delta\epsilon}\sqrt{(r\epsilon_f+\eta)^2\left(\frac{\delta\sigma_f}{\sigma_f}\right)^2 + (r\epsilon_b+\eta)^2\left(\frac{\delta\sigma_b}{\sigma_b}\right)^2}$$

where ϵ_f and ϵ_b are the virtual photon longitudinal polarizations at the forward and backward angles, $\Delta\epsilon = \epsilon_f - \epsilon_b$, $\eta = R_T/R_L$ and $r = 2Q^2/\vec{q}^2$. When $\vec{q}$ is large, the transverse response dominates (*i.e.* η is large). In this limit we can neglect $r\epsilon_f$ and $r\epsilon_b$ compared to η and one sees that fractional uncertainties in the two cross sections contribute with rougly equal weight to the error in R_L:

$$\frac{\delta R_L}{R_L} \approx \frac{\eta}{r\Delta\epsilon}\sqrt{\left(\frac{\delta\sigma_f}{\sigma_f}\right)^2 + \left(\frac{\delta\sigma_b}{\sigma_b}\right)^2}.$$

As will be shown below, normally the systematic error in the forward angle cross section dominates so that we have (for $\eta \gg r\epsilon$):

$$\frac{\delta R_L}{R_L} \approx \left[\frac{\eta}{r\Delta\epsilon}\right]\frac{\delta\sigma_f}{\sigma_f}.$$

Thus, large η's imply a large magnification of the uncertainty in R_L relative to uncertainties in the measured cross sections.

For L/T separation measurements, the two kinematics involve vastly different beam energies (and scattering angles). The sensitivity of the cross section to beam energy is typically quite different at the two kinematics comprising the separation. This is why the absolute energy, and not just the relative energy, must be precisely known. To see why this is so, one can take partial derivatives with respect to energy keeping the other independently measured quantities (the beam angle, the scattered electron angle and momentum and the proton angle and momentum) constant. Typically, the primary effect is due to the rapid variation of the momentum distribution. A change in beam energy effects both

the angle and magnitude of the momentum transfer. For a fixed proton momentum this implies a change in the recoil momentum sampled. Therefore the following derivatives enter:

$$\frac{\partial\theta_q}{\partial e} = -\frac{Q^2}{2e|\vec{q}|^2}\cot\frac{\theta_e}{2}$$
$$\frac{\partial|\vec{q}|}{\partial e} = \frac{1}{|\vec{q}|}\Big(\omega + \frac{Q^2}{2e}\Big).$$

Here, θ_q is the angle of the momentum transfer with respect to the beam, θ_e is the electron scattering angle, e is the beam energy, Q^2 is the four momentum transfer squared (with $Q^2 > 0$), $\vec{q}$ is the three momentum transfer and ω is the energy transfer. There are two distinct cases. When the momentum transfer and recoil momentum are roughly perpendicular, the recoil momentum is mainly sensitive to a change in the angle of $\vec{q}$. Conversely, when these two vectors are parallel, the main effect comes from a change in the magnitude of $\vec{q}$.

Let's examine the case when the recoil momentum and momentum transfer are perpendicular. To a good approximation the cross section derivative can be written as

$$\frac{\partial\sigma}{\partial e} = \frac{\partial\sigma}{\partial\theta_q}\frac{\partial\theta_q}{\partial e}.$$

Then one can write:

$$\frac{\delta\sigma}{\sigma} = \frac{1}{\sigma}\frac{\partial\sigma}{\partial\theta_q}\Big(e\frac{\partial\theta_q}{\partial e}\Big)\frac{\delta e}{e}$$
$$= \frac{1}{\sigma}\frac{\partial\sigma}{\partial\theta_q}\Big(-\frac{Q^2}{2|\vec{q}|^2}\cot\frac{\theta_e}{2}\Big)\frac{\delta e}{e}.$$

For the two measurements in an L/T separation, Q^2 and $|\vec{q}|^2$ are the same. In addition, $\frac{1}{\sigma}\frac{\partial\sigma}{\partial\theta_q}$ is roughly the same for the two measurements. Thus, we can write

$$\frac{\delta\sigma}{\sigma} \propto \frac{\delta e}{e}\cot\frac{\theta_e}{2}.$$

So for fixed $\delta e/e$, the fractional error in the cross section decreases with angle as $\cot\theta_e/2$. In L/T separations, large angles imply small energies. Therefore, for this case, the fractional uncertainty in the energy must be smaller at the higher energies.

As an example of the case of "perpendicular" kinematics, consider the d(e,e′p)n reaction. For $\vec{q} = 1$ GeV/c, $e = 4$ GeV, $\theta_e = 13.7°$, $\omega = 0.435$ GeV (on top of the QE peak) and recoil momentum, $p_r = 0.05$ GeV/c, the relevant derivative is $\partial\theta_q/\partial e = -0.84$ GeV^{-1}. (This is one of the kinematics (Kinematics "50A") from CEBAF Hall A proposal 93-041[2].) Then for a fractional uncertainty of 10^{-4} in the beam energy, the resulting uncertainty in θ_q is 3.4×10^{-4}. Since $\vec{q} = 1$ GeV/c and since the kinematics are perpendicular this implies the recoil momentum is uncertain by 0.34 MeV/c. At $p_r = 0.05$ GeV/c this gives a change in the deuteron momentum distribution (and therefore the cross section) of 1.6%. This is clearly the dominant error. Due to its small relative size the longitudinal response function uncertainty is roughly three times larger, or 5%.

The above example is for a very steeply varying momentum distribution (the deuteron at $p_r = 0.05$ GeV/c) and for a forward electron angle (13.7°) and therefore represents a worst case estimate. However, the cross section uncertainty of 1.6% although extreme is not much larger than for experiments at moderate recoil momentum on other nuclei.[3][4] **Therefore, the requirement on determination of the absolute centroid beam energy has been set at 10^{-4}. Again, this requirement can be relaxed somewhat at larger scattering angles (and lower energies for fixed Q^2).**

2. Main Methods Being Considered

On August 31, 1993, a meeting was held at CEBAF to discuss the four methods which are now being seriously considered as candidates for the high accuracy energy measurement. These methods have already been analyzed fairly extensively by their proponents; the goal of the meeting (and this document) was to evaluate the technical feasibility of each of these methods in order to determine whether they should be pursued further. Since these methods are described in separate documents, this report will only briefly review the proposed techniques and focus mainly on the technical issues raised at the meeting. (The proponents of each method are listed in parentheses at the beginning of each section.)

2.1 Elastic *ep* Scattering

(J. Berthot, P.Y. Bertin, V. Breton, C. Comptour, H. Fonvielle and O. Ravel)

2.1.1 Overview

Here the beam energy is determined by measuring the opening angle between the scattered electron and recoil proton in *ep* elastic scattering. This technique is a variant of one suggested several years ago by Bernhard Mecking. Mecking's technique involved selecting the kinematics such that the deduced incident energy depends only on this opening angle and is insensitive to the orientation of the beam to first order. However, this requirement implies fairly large electron scattering angles and hence low cross sections. This coupled with the thin targets needed to minimize multiple scattering gives unacceptably low counting rates. Therefore a modification of the technique was suggested.[5]

The modified method employs two sets of detectors symmetrically placed about the nominal beam direction. Thus, the scattered electron and recoil proton are detected in a pair of detectors, one on either side of the beam, and another pair of detectors is placed at the complementary angles (symmetric about the beam). Ideally, both detector pairs should measure the same value of the incident energy but if the beam direction does not correspond with the symmetry axis of the detector array, each pair will measure a different energy. For a given detector pair the beam momentum, P, can be expressed in terms of the electron and proton angles with respect to the beam, θ_e and θ_p respectively:

$$P = f(\theta_e, \theta_p) = M_p \frac{\cos\theta_e + \sin\theta_e / \tan\theta_p - 1}{1 - \cos\theta_e} + \Theta(\frac{m_e^2}{P^2})$$

where m_e and M_p are the electron and proton masses respectively. If the beam direction deviates from the nominal direction by angle $\Delta\alpha$, we have:

$$P_1 = f(\theta_e + \Delta\alpha, \theta_p - \Delta\alpha) = f(\theta_e, \theta_p) + \Delta\alpha \frac{\partial f}{\partial \theta_e} - \Delta\alpha \frac{\partial f}{\partial \theta_p} + \Theta((\Delta\alpha)^2)$$

$$P_2 = f(\theta_e - \Delta\alpha, \theta_p + \Delta\alpha) = f(\theta_e, \theta_p) - \Delta\alpha \frac{\partial f}{\partial \theta_e} + \Delta\alpha \frac{\partial f}{\partial \theta_p} + \Theta((\Delta\alpha)^2).$$

In summing the two measurements the first order term vanishes giving:

$$P = \frac{P_1 + P_2}{2} + \Theta((\Delta\alpha)^2).$$

Thus, the sum is relatively insensitive to the beam direction. (By taking differences instead, the beam angle can be determined.)

2.1.2 Detector geometry and requirements

In order to determine the incident energy with 10^{-4} accuracy, the angles must be measured at the 10 μrad level. This would be accomplished using standard goniometric methods. With a 2 meter flight path the required position accuracy is 20 μ (actually, a 1 meter flight path is now being considered). The proponents of this method suggest using silicon strip detectors with amplitude readout. Although the mean positions must be determined at the 20 μ level, the resolution can be somewhat worse than this. The resolution goal is 30 μ in the scattering plane (the out-of-plane resolution requirement is significantly less stringent ($\sim$ 100 μ), since the particle angles do not depend on the out-of-plane position to first order).

All four detectors would be placed on a disk of roughly 2 meter diameter (again, the possibility of using a 1 meter disk instead is now being examined). Having a round geometry minimizes angular errors due to thermal expansion effects. The disk would be oriented vertically and placed upstream of the main target. The vertical orientation is chosen since the beam's angular divergence in this plane is expected to be smaller than in the horizontal plane. The proton detectors would be held at fixed angle ($\sim 61°$) for all energies whereas the electron detector angles would need to be adjusted for each energy. As an alternative, one could have several electron detectors covering the required angular range (9° to 40°). This would be more expensive but avoids systematic errors due to changing the detector positions.

In addition to the silicon detectors there need to be auxiliary detectors to define the event trigger. A gas Čerenkov detector for the electron and two scintillators separated by 2 meters for the proton are suggested. Proton identification would be accomplished by ToF measurement between the two scintillators.

The entire device would require about 2.5 meters of beam line (5 meters including the supports for the trigger detectors). The reference plate would need to be placed with a position accuracy of 1 mm and an angular accuracy of 1 mr relative to the beam.

2.1.3 The target and measurement time

The very good angular accuracy required by this measurement necessitates minimizing multiple scattering effects. Therefore the target must be very thin and it as well as the outgoing particles must be in vacuum. (The silicon detectors can be outside the vacuum box, but must be very close to it). For the target, a 10 μ thick polypropylene "tape" is suggested although other hydrogenous materials could be considered. In order to avoid target burning, the tape would have to be spooled vertically at a rate of $\sim$ 10 cm/sec provided the horizontal beam spot size is 1 mm.

For hydrocarbon targets the ^{12}C quasielastic background must be considered. However, due to the small detector size and Fermi broadening, most of the quasielastic background will be eliminated in the coincidence spectrum of either detector pair. Monte Carlo simulations using harmonic oscillator p- and s-shell momentum distributions for ^{12}C indicate that the contamination, for a CH_2 target, is less than 3% of the hydrogen elastic events.

The counting rates were calculated assuming a 10 μA beam and a 1 msr solid angle determined by the proton detector size (5×2 cm^2). In this case the measurement requires less than 4 minutes for each energy.

2.1.4 Comments and technical concerns

The only substantive question raised at the meeting was in regard to rates and possible consequent radiation damage to the silicon strip detectors.

1) **Comment:** The calculated Møller rates are as high as 1.5×10^7. This rate is over the entire detector and so this may not present a problem from the point of view of deadtime; however, radiation damage is a concern. This high rate occurs at 61° (the proton detector angle) where the Møller electron has an energy of only 800 KeV. It may be possible to introduce a small amount of material to shield against these electrons without introducing significant position broadening (the material could be very close to the detector). The rates at the other detector angles are less than 1 MHz and may not present a problem. However, the Møller scattered electrons have energies of up to 45 MeV which are more difficult to stop. One could, in principle, use a small magnetic field to remove these electrons. The influence on the position of the *ep* elastically scattered electrons is significant and one would have to correct for this to deduce the true scattering angle.

   Response: Electrons of 800 KeV energy have a range of less than 2 mm in aluminum and 0.5 mm in copper and can be easily stoped. The X-rays produced are low energy and would be strongly absorbed. The most efficient way to proceed is to use a low Z absorber to stop the electrons followed by a high Z absorber for the X-rays. Additional multiple scaterring induced by this absorber will have no effect on the detector resolution as long as the absorber is close to the detector. (It will be in contact.) Regarding the last part of the comment,

the detection threshold for Čerenkov radiation in a gas with refractive index n is $E \approx m_e\sqrt{\frac{1}{2(n-1)}}$. Helium has a threshold of 73 MeV. Neon, with a threshold of 38 MeV, can also be used at lower energies.

Comment: Since the forward angle Møller electron rate is less than 1 MHz there may not be a problem in terms of deadtime or radiation damage at these angles. If this is the case the Čerenkov threshold should be adequate to filter out these events. For the high rate case a thin shield should be adequate to stop the Møller electrons since their energies are fairly low. For the case of 2mm of aluminum, multiple scattering will cause a position broadening of roughly 10 μ at the exit of the foil. If the silicon strip detector is in contact with the foil, this seems tolerable. For the copper foil the position broadening due to multiple scattering is even less.

2) **Comment:** John Domingo suggested that if the rates are problematic for the silicon strip detectors, we should look into using gas microstrip detectors. They would need to provide roughly 30 μ resolution.

   Response: Silicon strip detectors have been used successfully in many experiments. At this time I am not sure gas microstrip detectors perform at the same level.

   Comment: If the above measures are successful, perhaps silicon strip detectors would be adequate.

3) **Comment:** This method, although it employs a thin target may be destructive to the main experiment. If this is so, it would be desirable to have a continuous measurement of energy deviations during the experiment using another method, such as position measurement in the arc section. This apparatus should not interfere with normal running; P. Bertin suggested that the target "tape" could have a whole through which the beam could be aimed when the system is not in use; this would result in minimal changeover time.

   Response: I have nothing to add.

4) **Comment:** There was some concern at the meeting over the question of target heating, although this seems to be a tractable problem. Perhaps the choice of target material needs to be considered more carefully since polypropylene tends to burn easily.

   Response: It is true that we can use other targets besides polypropylene. For the highest intensity we also can allow the target to be destroyed. Rastering can help to solve the problem at high intensities.

   Comment: Rastering can alleviate the problem of target heating, although the details need to be looked into. It may indeed be possible to simply let the target burn since this method does not require measuring absolute cross sections.

5) **Comment:** There was a considerable amount of discussion during the meeting concerning the construction of the vacuum box. This also seems to be a tractable problem and more of a design detail than a technical concern.

Response: The vacuum box is just a question of engineering and of money.

2.1.5 Summary

This technique offers the possibility of energy measurement near the 10^{-4} level. The major drawback to this method is that the calibration target interferes with the beam, precluding the possibility of performing the energy measurement while running the actual experiment (except perhaps for experiments which have relaxed tolerances in terms of beam spot size and which can run at lower currents). Thus, the *ep* method would rely on another system (the arc beamline for example) for monitoring relative changes in the beam energy during the course of an experiment. How this system will interface with other beamline systems, such as the rastering system, needs to be addressed. Also, the ideal location along the beamline needs to be identified. It appears that the size of the device precludes placing it in the tunnel so if this method is pursued, adequate space in the Hall needs to be reserved.

2.2 Angle Measurement in the Arcs

(G. Fournier and P. Vernin)

2.2.1 Overview

This method employs the standard technique of measuring a bend in a magnetic field. There are a string of eight bending magnets providing a total bend of 34.3° into both Hall A and Hall C resulting in a maximum dispersion of roughly 12 meters. There is a plan to use the arcs leading into Hall C to perform a measure of the energy to $\sim 10^{-3}$.[6] Subsequently, the possibility of using the Hall A arcs to measure the energy to $\sim 2 \times 10^{-4}$ has been examined.[7] In either case, the method involves tuning the arcs to a dispersive mode for the absolute measurement and then restoring the achromatic mode and monitoring the beam at a point of high dispersion near the middle of the arc beamline in order to monitor relative changes in the beam energy during the course of an experiment. An alternative option is to keep the dispersive tuning during the actual experiment.

The absolute measurement method suggested by Vernin involves measuring the bend angle by using two pairs of "Superharps" (wire scanners), one pair upstream of the first bending magnet and one pair at the end of the arc. This method should be less sensitive to relative magnet alignment than measurement of a position at a point of high dispersion. The energy measurement requires knowledge of the net bend angle and of the field integral between the two pairs of Superharps, both at the 10^{-4} level.

2.2.2 Measurement of the bend angle

The net bend of 34.3° must be determined to 10^{-4} implying an angular error of 60 μrad. Therefore both the entrance and exit angles would need to be determined to roughly 40 μrad assuming that these two errors are independent. Provided the position accuracy for each Superharp is 100 μ and the two position measurements involved in each angle measurement are independent this implies that the monitors of each pair must be separated by at least 3.5 meters.

The angular error also includes a contribution from monitor-to-monitor surveying errors. It would be desirable to have this error contribute significantly less than 60 μrad to the bend angle error. Due to the curvature of the arc tunnel it is not possible to view all four monitors from a common point complicating the surveying of the Superharps. To circumvent this problem, Vernin suggests a method employing a mirrored wedge placed near the midpoint of the arcs. The wedge must be positioned so that it can be viewed from either end of the arc, preferrably in the vertical symmetry plane of the arc but inside or outside of the nominal beam trajectory. It appears that the best location is on the outer tunnel wall. Using an autocollimation technique to define a line perpendicular to the mirror and then another line defined by the wire positions of each Superharp pair the entrance and exit angles are defined relative to the mirror surfaces. Knowledge of the wedge angle then implies knowledge of the relative angle between the two pairs of Superharps. The surveying system including the mirrored wedge would be located above the beam pipe. One must then include viewing ports on the beam pipe to examine the wire positions. In order to minimize refractive effects these ports should contain removable caps rather than windows.

2.2.3 Measurement of the field integrals

Regarding the measurement of the field integrals for each of the arc magnets, Vernin suggests a null measurement technique using two small coils mounted on a rigid rod. The coils are separated by the nominal magnetic length, L, of the arc magnet. One of the coils starts at the magnet's midpoint and the rod is moved through the magnet until the other coil reaches the midpoint. By summing the induced voltages from both coils and performing a double integral, one measures the difference between the magnet's field integral and the product of L and the field at the magnet's midpoint, B_0:

$$\int B_y dl = B_0 L - \frac{1}{a} \int \left(\int_{t(0)}^{t(z)} V dt' \right) dz$$

where dz is the linear displacement differential element, a is the effective area (area $\times$ number of turns) of each coil and V is the sum of the induced voltages for the two coils. This method has several advantages:

1) The integration range is twice the distance traversed by the rod implying a factor of two reduction in measurement time for a given speed.

2) The two coils cross the entrance and exit fringe field regions simultaneously so that the voltages from the two coils partially cancel each other, reducing the dynamic range required of the electronics and reducing the time during which the signal is significant thereby relaxing the speed uniformity requirement.

3) Since the double integral measurement consists of the difference between the true and assumed field integrals, it is small compared to the field integral itself. Therefore, the relative uncertainty in the measurement is signficantly smaller than the required uncertainty in the field integral. This gives rise to a relatively loose tolerance for the velocity of the rod, for example.

2.2.4 Technical concerns

There were various technical concerns raised at the meeting and during informal discussions regarding both the measurement of the bend angle and the field integral for the arc. Regarding the survey technique, questions of accuracy as well as implementation were raised.

1) **Comment:** The measurement of the Superharp angular alignment is accomplished by first sighting along the line defined by the two Superharps' wires. This requires rotating the theodolite downward to view the wires. Then the theodolite must be rotated upward to a horizontal plane. The angle is then determined by rotating horizontally to the line defined by the mirror's normal. W. Oren of the CEBAF Survey and Alignment Group, pointed out that the upward rotation prior to locating the mirror's normal may induce a slight horizontal pointing error which will affect the angle measurement. In addition, the optical axes of the instruments and the mirror need to be set at the same elevation and this may be a time consuming process. Oren listed several additional error sources due to other axis pointing errors in the theodolites.[8] Oren suggested that a triangulation survey method may be superior (especially since most survey groups have experience with this method) but perhaps both methods should be used as cross checks on one another.

   Response: Regarding the statement: "... the upward rotation prior to locating the mirror's normal may induce a slight horizontal pointing error which will affect the angle measurement", as a geometrical object, a theodolite consists of an optical axis (Oa) linked to the ground through first a horizontal axis (Ha) perpendicular to Oa and second a vertical axis Va. Let v be the angle around Ha ($v = 0$ or π means Oa horizontal) and h the angle around Va (see Figure 1).

   i.) If Oa is not perpendicular to Ha and/or Ha is not perpendicular to Va these defects can be cancelled by making two measurements of the "horizontal" angle between the mirror's normal and the Superharps' wires, the first with $v = 0$ and the second with $v = \pi$. If we call the resulting angles θ and θ', the true horizontal angle is simply $(\theta+\theta'-\pi)/2$.

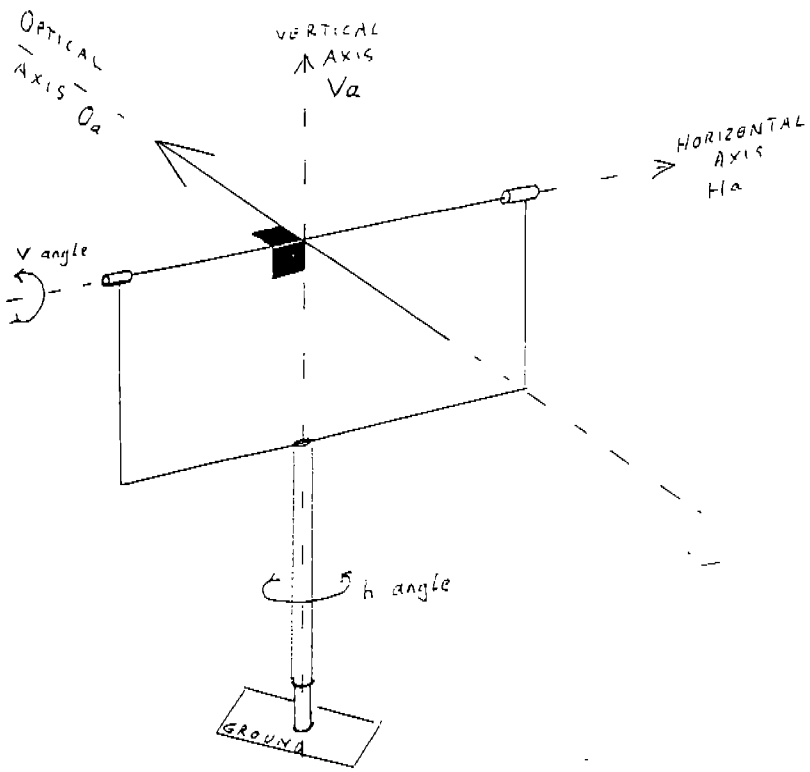

Figure 1. *Schematic of a theodolite used to illustrate the method of cancelling various defects in the surveying of the Superharp detectors employed in the arc measurement scheme.*

ii.) If Va is not rigourously vertical, this will produce on the measurement an effect of second order. In other words, a sufficient verticality of Va will be easy to reach with a standard theodolite.

For the first point, the solution is to purchase a theodolite having the required accuracy, to check this accuracy in a lab test and to check/correct it at measurement time using the procedures described above, which are standard ones.

Regarding the statement: "... in addition, the optical axis of the instruments and the mirror need to be set at the same elevation and this may be a time consuming process". This is incorrect. If the mirror is large enough in the vertical direction, there is no need for an accurate adjustment of the theodolite with respect to the mirror. An accuracy of typically a few centimeters, set at construction time, will be sufficient forever. This is an issue of the autocollimation method, which is sensitive to the orientation of the mirror, not to its position as long as the optical axis crosses the wedge somewhere in the mirrored area, preferrably not too close to any edge. Similar arguments also apply for the two other positions and the three angle degrees of freedom of the mirrored wedge: in the worst cases, the effect on the measurement is of second order.

Regarding triangulation versus autocollimation: to my knowledge, there is no remote version of the triangulation method. As we want some remote survey

capability, we have no choice and we must adopt the theodolite/video camera as our basic method. A check with the triangulation method performed by CEBAF will be welcome.

Comment: The techniques described should remove the errors induced by theodolite defects unless, of course, the theodolite behaves in an irreproducible manner. Irreproducibility may be caused, for example, by play in the theodolite bearings. Such defects are expected to be small in a theodolite of reasonable quality.

Regarding the need to have the mirror at the same elevation as the optical instruments, provided the mirror is planar over a region encompassing the possible vertical placement error, there is no problem.

Oren suggested several alternate methods for the bend angle determination which could be examined. Some of the possible methods: wire offset devices which use a pair of wires fore and aft, referenced to the Superharps and to each other; laser tracking devices; gyro-theodolites; triangulation. The wire offset devices have the advantage that, unlike optical methods, there are no refractive effects over the large distances of the arc beamline. Gyro-theodolites, although somewhat expensive, would satisfy the accuracy requirement and would eliminate the need for a link (material or light ray) between opposite ends of the arc. Triangulation has the advantage of providing redundant information from several measurements involving different reference points. Thus, triangulation lends itself to accurate absolute determinations. In contrast, the "autocollimation" method gives only one data point; evaluating the accuracy of the measurement therefore requires estimation of all possible error sources.

2) **Comment:** Oren listed several other errors associated with the sighting of the Harp wires.[8] The Harp wires must include adjustments so that they are precisely vertical. One must also have good lighting on the wires. If there is a nitrogen purge on the open vacuum system, the line of sight will move as cold gas circulates through the system.

Response: Any technique which is to provide an accurate measure of a horizontal angle, relies on setting something, somewhere, vertical with high accuracy. For the chicane method, it is the auxiliary bending acting as a synchrotron radiation source. Here it is the harp wires. This would be the case even without an optical survey. The required tolerence is achievable, particularly if we have a theodolite to control it directly.

Comment: The issue of refractive errors still needs to be addressed, although perhaps this is best addressed with actual measurements. The possibility of referencing the wire positions to external fiducial marks with the required accuracy should be examined. One can perform this transfer prior to installation of the Superharps. This would then avoid the requirement of opening the beam line to air.

3) **Comment:** Depending upon mechanical stability in the tunnel, it may be necessary to periodically survey the Superharps. If this needs to be done frequently, it would be desirable to have the capability of performing remote surveys using video cameras.

   Response: In fact, this is a suggestion.

4) **Comment:** The field integral measurement must include the regions between the arc dipoles. Residual field of quadrupole and corrector magnets as well as other ambient fields, including the Earth's field must be considered. L. Harwood pointed out that the ambient field depends on the history of activities in the tunnel and will therefore vary over time.

   Response: We need data on the residual field in auxiliary magnets and on the ambient field on the beam axis, in the inter-magnets sections.

   i.) Auxiliary magnets: the report "CEBAF-PR-93-004"[9] quotes a 4.6×10^{-5} effect at 6 GeV (300 KeV absolute) for the corrector magnets. Is this effect reproducible after a cycling procedure, in which case it can be canceled to a large extent by injecting a small current?

   ii.) Quadrupoles: the remnant dipole and quadrupole components must be measured. If necessary, they can be equipped with a bipolar auxiliary power supply.

   iii.) Ambient field: it can be partially shielded, partially included in the integral measurement and partially corrected (*i.e.* it will give rise to a correction in the final energy calculation). Its reproducibility must be checked periodically. One can imagine that the parts located at more than 6 gaps from the arc dipoles will be shielded. The unshielded portion thus consists of 12 gaps=30 cm for a 3 m long magnet; therefore the ambient field will act over 10% of the total length. A 10^{-4} effect at 1 GeV (*i.e.* 2×10^{-4} at 0.5 GeV) translates into 1 Gauss uncertainity on the ambient field, whose magnitude is of the order of 0.5 Gauss (Earth's field). This seems to be a tractable correction.

5) **Comment:** The field integral must be reproducible to $\sim 10^{-4}$ for an established cycling procedure. This includes effects of eddy currents induced by fast shutdown (as in, for example, a power failure). According to Harwood, the field integrals for these magnets are reproducible at the 10^{-5} level for a fixed current, whereas this is not guaranteed for a fixed central field value. This may be due to temperature effects which can change the central field to first order, while leaving the field integral constant due to a compensation between mean field and magnetic length.

   Response: In the September meeting at CEBAF, I suggested adding a 9th magnet, supplied in series with the 8 arc magnets and equipped with an absolute field

integral measurement device able to operate continuously. This device includes an NMR probe measuring the central field (B_0). This measurement must be stable during the integral measurement (a few tens of seconds), but the energy measurement is not affected by long term drifts, as those produced by thermal effects for example.

6) **Comment:** As Harwood pointed out, the field at the starting point of the coil outside the magnet must be small compared to the magnet's central field (or it must be accurately known). This can be seen from:

$$\int B_y dl = (B_0 + B_{\text{start}})L - \frac{1}{a}\int\left(\int_{t(0)}^{t(z)} V dt'\right)dz$$

where the notation is the same as before and B_{start} is the magnetic field at the starting location of the coil outside the magnet. For the error from B_{start} to be negligible, this field must be $\sim 10^{-5}$ of the central field. One can reduce this field by using a μ-metal jacket around the beam pipe near this location (which is far from the magnet).

Response: A possible solution is given at the end of the comment.

7) **Comment:** The ending position of the coil must be at the same location as the reference field (measured by NMR). The concern is that the magnetic field may have fairly large local variations due to irregularities in the pole surfaces. Perhaps one can locate a region of the magnet in which the field is relatively constant.

Response: This comment refers to geometrical defects of the pole surface. These defects are stable versus time and located in a region where one can perform NMR maps. Such maps, made once forever for a set of inductions, can relate the field at the ending coil position to the field measured by the NMR at its permanent position (B_0).

Comment: This is true, provided the coil's ending position is stable and can be accurately located relative to the field map data. The required positional accuracy will depend on the distance scale for an appreciable ($\sim 10^{-4}$) field change.

Response: The field integral measurement will be performed in flight by gating at the starting and ending positions using an optical switch having a reproducibility of 0.1 mm. Thus, the coil's travel will exceed the range over which the field integral is measured.

2.2.5 Summary

Regarding the bend angle measurement, alternative methods should be examined, especially since the proposed autocollimation technique does not provide redundant information and its accuracy is therefore difficult to verify. Although the lack of a line of sight over the length of the arc does present some difficulty for the surveying of the detectors (as opposed to the chicane method described below), the large bend angle of the arc beamline ($\sim 34.3°$) implies a relatively loose tolerance on the angle measurement (60 μrad for a 10^{-4} measurement).

The main limitation to the arc method will presumably be the measurement of the field integral. The large number of magnets involved makes the procedure somewhat tedious, especially since there are other magnets in the arcs besides the main dipoles. Although, it seems unlikely that the arcs would provide an energy measurement at the required level of 10^{-4}, there is no obvious obstacle to reaching two or three times this goal.

2.3 Chicane

(A. Saha)

2.3.1 Overview

Basically, this method involves measuring the deflection of the beam in a magnetic field. The main bending magnet, which provides a horizontal deflection, is preceded and followed by vertical "kicker" magnets which produce vertical bands of synchrotron radiation. The separation between these bands is proportional to the bend angle and therefore inversely proportional to the beam momentum:

$$p = \frac{q}{\theta_h} \int B_v dl$$

where q is the electron charge, θ_h is the bend angle in the horizontal plane and B_v is the vertical component of the magnetic field. Thus, the bands of synchrotron radiation produced by the kickers provide an alternative, and non-destructive, method of measuring the bend angle. This method has been written up elsewhere[10]; here the main features are summarized in order to make the technical concerns raised in the meeting clear.

This method has the advantage that all the position measurements can be made using detectors mounted on a *common* precision optical table. The method suggested for measuring the centroids of the synchrotron bands involves using split plate intercepting photodiode detectors.[11]

2.3.2 Required accuracies

This method requires measurement of the magnetic field integral and the bend angle. In order to determine the beam momentum to 10^{-4}, both of these quantities must be determined at a level somewhat better than 10^{-4}. For the field integral measurement, the issues are similar to those in the arc section method (although, here, there is only one magnet instead of eight). Therefore, only the angle measurement is discussed in this section.

To determine the angle between the synchrotron bands (and hence the bend angle) four monitors, mounted on a precision optical table, would be used. If the distance between the front pair and rear pair is c and the distances between the two front and two rear monitors are a and b respectively, then the bend angle is $\theta = (a-b)/c$. Assuming the errors in these quantities are independent:

$$\frac{\delta\theta}{\theta} = \sqrt{\frac{(\delta a)^2 + (\delta b)^2}{(a-b)^2} + \frac{(\delta c)^2}{c^2}}$$

where the uncertainty in quantity x is denoted δx. For $a = 0.9$ m, $b = 1.2$ m, $c = 2.0$ m ($\theta = 8.6°$) and $\delta a = \delta b = \delta c = 15\ \mu$ this gives $\delta\theta/\theta = 7.1 \times 10^{-5}$. (If the error in the field integral is comparable, the total error in the deduced beam momentum is $\sqrt{2}$ larger, or 10^{-4}.) Therefore, the centroids must be determined at the level of 15 μ. Equivalently, the bend angle must be determined to about 11 μrad, so that the centroid angle of each beam needs to be determined to about 7.5 μrad.

The above requirement implies high resolution position monitors as well as accurate measurement of the relative position of each monitor on the optical table. Regarding the centroid measurement, the split plate photodiode detector[11] seems promising. The resolution quoted for this device is $\sim 5\ \mu$. One of the main problems is that the synchrotron beam has a fairly large angular spread in the plane perpendicular to the kicker bend. One must determine the centroid with much greater accuracy than this width. The width of the distribution in radians, σ, is given by:[11]

$$\sigma \sim 0.565(1/\gamma)(\lambda/\lambda_c)^{0.425}$$

where $\gamma = e/m$, e is the beam energy, λ is the wavelength of the synchrotron photons and λ_c is the "critical" wavelength. At the critical wavelength, with a beam energy of 0.5 GeV (4.0 GeV) the width is 580 μrad (72 μrad). It is conceivable that the centroid angle can be measured to within roughly 1/10 of the width. Since our requirement is 7.5 μrad, this is problematic for all but the highest energies. From the above expression for the width of the synchrotron beam, it is apparent that it would be advantageous to restrict the measurement to shorter wavelengths. One technique which has been used[11] involves placing a thin Be foil in front of the detector to absorb the long wavelength photons. This resulted in a reduction of the angular distribution by more than a factor of 10. In their case the critical wavelength was roughly 25Å. Taking their formula for the critical wavelength:

$$\lambda_c = 5.59\frac{r}{e^3}$$

where r is the bend radius in meters, ϵ is in GeV and λ_c is in Å, our bend radius of 200 meters gives 8900Å (17Å) for an 0.5 GeV (4.0 GeV) beam. So for a 4 GeV beam we can expect similar results. However, at low energies, the critical wavelength is substantially larger, so that an absorber would greatly reduce the number of detected photons. This obviously has consequences on the measurement time.

2.3.3 Technical Concerns

The following concerns were raised at the meeting:

1) **Comment:** The main bending magnet and kicker fields must be perpendicular. Deviations from perpendicularity can result in a background for the measurement of the synchrotron bands since the main magnet's bend would have a component in the plane of the kicker bend. It can also lead to an error in the bend angle determination. The sizes of these effects need to be estimated for realistic surveying tolerances. Karabekov remarked that deviation from perpendicularity was the main source of error for the SLC measurement using this technique (2–3 mrad error).

   Response: The SLC measurement made an estimate of the roll of the dipole magnet with respect to their desired orientations (*i.e.* the degree to which we can assume that the detected synchrotron radiation (SR) swaths are perpendicular to the direction of the analyzing bend). The effect was studied by simultaneously measuring the positions of the SR stripes at two different locations on the phosphor screens[12] The error of 3×10^{-4} (which, incidentally, was the main source of error of their technique to determine the beam energy) is for a measured misalignment of 2 mrad. This is a conservative error estimate they determined after the method was implemented since they claim corrections could have been applied if they had planned for it beforehand. In our method we shall place the pairs of vertical kicker magnets before and after the main horizontal bend magnet on precision tables which can be surveyed to 20 to 30 arc-sec (approximately 0.1 mrad) for verticality and the main horizontal bend magnet to the same precision for horizontality with respect to the direction of the Earth's gravity[13]. If we add all three errors, we get the worst case error on the determination of the roll angle to be 0.3 mrad. This leads to an error contribution to the energy determination of about 4.5×10^{-5}.

   Comment: Careful survey of the magnets will allievate the error from non-perpendicular fields provided the field direction and surveyed symmetry plane are perpendicular.

2) **Comment:** It appears that for each measurement, all four detectors would need to be moved to locate the centroid of the synchrotron bands. Can the position accuracy of $\sim 15\ \mu$ be maintained after such movement? How much time is required to determine their relative positions at the required accuracy?

Response: The split plate intercepting photodiode detectors measure the centroid of the synchrotron radiation stripes with an error of $\pm 5\mu$ and has a large dynamical linear range of $\pm 800\mu$.[11] As in the previous use of these detectors at the University of Wisconsin's 1 GeV electron storage ring (Aladdin), we will also intercept 2 to 3 mrad of synchrotron radiation bands in our method. The detector assembly and electrical feedthroughs are mounted on a single flange. A micrometer feedthrough allows horizontal positioning of the detector. The capability to precisely move the detectors to a couple of microns precision by means of the micrometer scan will therefore be very useful for the initial position and linearity check of the monitor. Since each detector has such a large dynamical linear range of $\pm 800\mu$ where it can maintain the $\pm 5\mu$ position resolution, we are confident that the position accuracy of $\sim 15\mu$ can be maintained. The fast response of these monitors is demonstrated in fig. 6 of the Brodsky *et al.* paper where they show the vertical motion of the synchrotron radiation beam over several iteration steps during the beam orbit optimization process. The iteration steps are performed in an interval of approximately 10 seconds and several measurements of the beam position are made during each step.

Comment: Remote controlled scanning and position readout seems like a reasonable solution provided the synchrotron beam centroids fall within the 800 μ range.

3) **Comment:** At low energies the photon spectrum is predominantly long wavelength and the angular distribution is very broad. In order to increase the accuracy of the centroid determination one could, in principle, reduce the angular spread by using an absorber in front of the detector to attenuate the low energy photons. The number of detected photons needs to be calculated for this case to estimate the counting time for the measurement. Perhaps the bend radius for the kickers should be optimized further with respect to this issue.

Response: It is possible to decrease the critical wavelength of the synchrotron radiation at the lower energies by decreasing the bend radius of the kickers for the lower energies, thus decreasing the long wavelength contributions to the radiation and also narrowing its angular distribution. We believe this is not a major concern. Technical solutions can be determined to implement this smoothly while maintaining the positional and directional accuracies involved. One possible solution is to have two sets of kicker magnet arrangements, one for the higher energies (≥ 1.5 GeV) and one for the lower energies, each of which are precisely manufactured to the required tolerances and interchangeable in short order.

Comment: This needs to be made more quantitative. Even if only two sets of kickers would suffice this does not seem like an optimal solution given the added complexity and required positional tolerances. Given the cubic dependence of the critical frequency with respect to the beam energy, energies of 1.5 and 4.0 GeV would have critical wavelengths differing by roughly a factor of twenty. The feasibility of the measurement over this large dynamic range needs to be assessed.

2.3.4 Summary

The chicane method has several advantages. First, since this technique involves measurement of the synchrotron flux, it is non-destructive to the electron beam. Second, this method relies on measuring the field integral of only one magnet, as opposed to eight for the the arc beamline method. Finally, by having all the detectors mounted on a common precision table, their relative positions can be accurately measured and controlled, another advantage which is not shared by the arc beamline method. The main unresolved question is the accuracy in the measurement of the synchrotron beam centroids given their large instrinsic widths. It is not obvious how one can narrow the synchrotron beams using absorbers over the large energy range of CEBAF. This issue needs to be resolved quantitatively before the feasibility of the method can be assessed.

2.4 Synchrotron Radiation Measurement

(I. Karabekov)

2.4.1 Overview

This method involves measuring the flux of synchrotron radiation produced in each of two bending magnets.[14] The fields in the two magnets are chosen to be different so that the synchrotron intensity distributions cross at a given wavelength. This wavelength is selected by two double crystal monochromators, each one viewing the radiation from one of the two magnets. The radiation is first collimated so that only the central portion of each of the two magnets is viewed. The magnetic field must be measured in the region seen by these slits (as opposed to bend angle measurements where the field integral over the entire magnet is needed). After selecting the wavelength the two synchrotron beams impinge on ionization chambers. Ideally, a zero current difference between the two ionization chambers indicates that the crossing point of the two synchrotron distributions was properly chosen. From the measured magnetic fields, one can then calculate the electron beam energy.

2.4.2 Technical Concerns

There were several concerns raised at the meeting. In addition, after examining the method in detail, several questions about the calculations used in the above mentioned article[14] have arisen. This reference will be referred to as "the article" in this section.

1) **Comment:** Equation (2) in the article appears to involve an assumption which can be grossly violated. According to Jackson[15] (see Eq. 14.83), the synchrotron photon spectrum involves the modified Bessel function, $K_{1/3}$ as well as $K_{2/3}$. The article ignores this term which is valid so long as $\theta \ll 1/\gamma$. This is a questionable assumption since the angular integration involves several milliradians whereas for CEBAF energies, $1/\gamma \sim 0.1$ to 1 mrad. A potentially more serious problem is that the article appears to have neglected θ in the overall multiplicative factor of $(1/\gamma^2 + \theta^2)^2$. This effects the photon flux estimates and more importantly the

sensitivity of the method to the beam energy especially when θ is several times larger than $1/\gamma$. Moreover, the arguments of the Bessel functions also contain a θ dependence which seems to have been ignored.

Response: This remark concerns the article describing the main idea of the method.[14] Here the vertical distribution described by the function $K_{1/3}$ was not presented because the formula used results from an integration over a vertical angle range of ± 1 mrad.[16] This was done with the purpose of simplifying the analytical expressions, necessary for the estimation of the sensitivity of the method for chosen parameters of the beam. When the complete functional form of the distribution is used, including $K_{1/3}$, the resulting analytical expressions are extremely complicated and can't be presented in the article. The full expression for $\partial N_\gamma/\partial\gamma$ is presented in the Appendix.

In the Proposal for Hall A (which was presented only orally) the calculation was performed using the complete synchrotron radiation formulae[17][18]:

$$N_\gamma = \frac{3}{4\pi^2}\frac{1}{137}\frac{I_e}{e_0}\gamma\Delta\theta\int_{y_1}^{y_2} y dy \int_{-\pi/2}^{+\pi/2} F(\alpha, y) d\alpha$$

where

$$F(\alpha) = \eta^4\left[K_{2/3}^2(z)(1+\zeta\xi y\frac{\alpha}{\eta}) + \frac{\alpha^2}{\eta^2}K_{1/3}^2(z)(1+\zeta\xi y\frac{\eta}{\alpha})\right],$$

$z = \frac{\lambda_c}{2\lambda}(1+\alpha^2)^{3/2}$, $\eta = \sqrt{1+\alpha^2}$, $\lambda_c = \frac{7.12\cdot 10^3}{\gamma^2\cdot B}$, $\gamma = \frac{E}{m_0c^2}$, e_0 is the electron charge, $y = \frac{\lambda_c}{\lambda}$, $\alpha = \gamma\psi$, ψ is the vertical angle between the orbit plane and the direction of the radiated photons, θ is the bend angle, ζ is the electron polarization and $K_{1/3}(z)$ and $K_{2/3}(z)$ are modified Bessel functions.

The computer program was used for calculations of the resolution including optimization of parameters of magnetic fields and slit sizes.

Comment: It was not clear initially that the vertical angle was, in fact, integrated over in arriving at the formulas in the NIM article. It is difficult to comment further without detailed examination of the simulation program. However, provided the program used for the optimization of the method and for evaluation of its sensitivities accounted for the full angular dependence, there is no problem.

2) **Comment:** Equation (6) in the article appears to be erroneous. Clearly $A\Delta\gamma$ must be an overall multiplicative factor. Moreover, it appears that the coefficient in front of the first bracketed expression should be $\frac{2a^2}{3\gamma^3}$ rather than $\frac{3a}{2\gamma^3}$. In addition the expression in the article appears to assume that ξ (the solid angle ratio) is equal to one. Otherwise, the "constant" A would be different for the two spectra. How does this effect the optimization of the method?

Response: This comment is correct. There is a technical error in the article. I'll send the letter to NIM publishers. Thank you. But this mechanical mistake has no influence on the presented results (see the above response).

3) **Comment:** Equation (7) in the article appears to have neglected the last line of the previous equation. (Neglecting that line gives the expression found in the article.) Why was this term neglected and what is the effect on the optimization of the method?

   Response: There is no neglection. One can take the derivative of expression (5) in the article and arrive at the same result. This question also relates to the article in NIM, not to the Proposal.

   Comment: There was some confusion over which expression was differentiated to arrive at Equation (7). The optimization of the magnetic field ratio in the article is indeed correct.

4) **Comment:** In Table 1, the article lists magnetic field ratios which are constant except for the 4.0 GeV beam energy. Implementation of this method would then require more than one chicane, as the field ratio must be constant for all energies in order for the chicane to transport the beam. If this requirement is enforced, what is the effect on the sensitivity of the measurement to the beam energy?

   Response: This relates to the topic of optimization. In the article this optimization was not the aim. In the Proposal the magnetic field ratio chosen was the same for all energies. The calculations show that in this case we'll lose less than 5% sensitivity.

   Comment: A loss of less than 5% in sensitivity seems tolerable.

5) **Comment:** In order to optimize the crossing point in the photon flux spectra, solid angle ratios for the two counters vary appreciably from energy to energy. This means that several sets of slits would have to be constructed and installed. This makes this method somewhat difficult to implement and calibrate. Coupled to this is the question of how accurately the slits will need to be aligned for each measurement.

   Response: We propose constructing one set of variable slits. For a given absolute value of the beam energy the ratio of slit widths can be easily calculated and installed.

   The accuracy of the ratio of the slit widths affects the accuracy of the energy measurement. So this ratio will be measured with higher accuracy than the designed accuracy of the energy measurement. This can be accomplished using photometrical instrumentation. The procedure is as follows. Two photodiodes (1) will be installed after each slit (2) and joined in a four arm bridge with resistors and electrometer (3) as shown in Figure 2. Vacuum chambers (4) in the reference magnets will have auxiliary ports (5) through which a laser beam (6) will be injected along tangent lines to the calculated beam trajectory using a

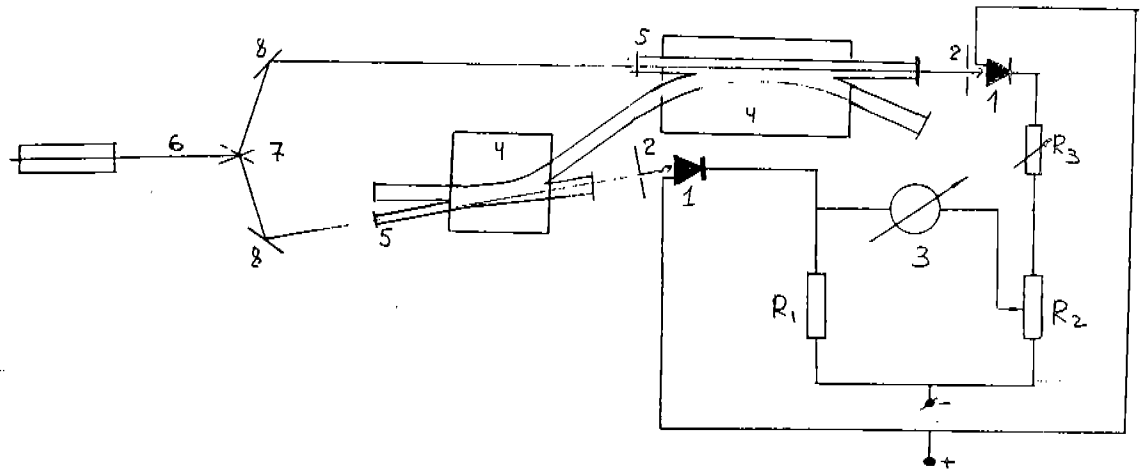

Figure 2. *Laser calibration system used to determine the ratio of the slit widths in the synchrotron energy measurement technique. See the text for details.*

beam splitter (7) and mirrors (8). These tangent lines coincide with the axes of each slit.

The four arm bridge will initially be balanced (up to the value of the dark current) in the absense of the slits by using laser light collimated before the beam splitter (see Figure 3). Then the values of resistance of the bridge resistors will be changed so that the bridge is balanced when the photodiodes are illuminated by laser light collimated by slits of the calculated widths. The slit size would be changed using a micrometer screw until the four arm bridge electrometer registers zero current. The resulting slits will have the calculated widths to within the accuracy of the dark current fluctuations of the photodiodes. Silicon photodiodes typically have dark currents less than 10^{-14}A and dynamic ranges of 280dB.

Comment: The photodiode/bridge circuit seems like a reasonable way to calibrate the slit widths provided the intensities of the split beams are equal and provided the laser beams used in the calibration coincide with the synchrotron radiation beams during operation. The sensitivity of the measurement to the beam position needs to be addressed. In addition, the laser beam should be broad enough to fully illuminate the largest slit. The light intensity must also be uniform over the slit aperture in order to relate the light current to the aperture size. Finally, the responses of the two photodiodes must be equal or calibrated at less than the 10^{-4} level. Presumably the calibration can be done by varying the

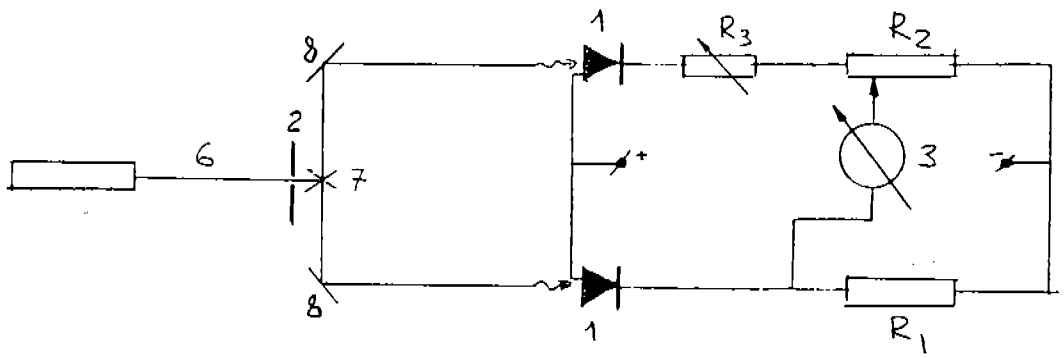

Figure 3. *Laser system used to calibrate the bridge circuit. The resistors would be adjusted to achieve a balanced condition. Subsequently, the slits would be inserted before each photodiode to calibrate their width ratio (see previous figure).*

laser intensity before the splitter without the slits in place. If the photodiodes responses are the same, the initial null measurement will remain null as the laser power is changed.

Response: The photodiodes have quantum efficiencies of 0.999 ± 0.002. The uncertainity $\delta = \pm 0.002$ is the result of different reflectivities of the surface of the photodiodes.[19] Assuming a laser beam with a diameter of $d = 5$ mm and measurement of its centroid with accuracy equal to $\Delta x = 0.1$ mm, a displacement of the beam centroid will change the photocurrent as follows:

$$I_{ph} = I_{ph0}\sqrt{1 + \left(\frac{\delta \Delta x}{d}\right)^2}.$$

This effect is seen to be much less than 10^{-5} and can be neglected.

A wide and uniform laser beam which is necessary to illuminate the slits (see Figure 2) can be achieved by scanning the laser light in the bending plane using a helical rotating mirror. The amplitude of the scan will be bigger than the largest slit width. For the lowest energy (0.5 GeV) this amplitude is equal to 5 mm.

We can also construct several slits for frequently used energies. These slits can be precisely measured using standard optical, mechanical and photometrical instruments. The absolute accuracy of these measurements are better than 10^{-4}.

Comment: Karabekov suggests using a rotating mirror to split the beam for illumination of the two photodiodes. The beam would then describe an arc across each of the two photodiodes. In order to measure the photodiode response as a function of position of the beam, it would be necessary to "gate off" the beams so that only a small portion of each arc contributes to the current. A couple of methods were suggested, one using an electronic gate, the other a disk with two holes. In the case of gating, one must be certain that there is no "odd-even" asymmetry to the gates since this will not average to zero over time (*i.e.* many successive gates). In the case of the disk, the two holes must have precisely matched areas.

Regarding the uniform illumination of the laser across the slits, the suggestion of scanning the beam over a range larger than the biggest slit seems reasonable provided the scanning speed is constant as the beam passes over each slit.

Regarding the uniformity of the photodiodes' responses, Karabekov suggests that one could obtain photodiodes with the required uniformity by selecting them from a large (100 or so) sample. Otherwise the position dependence would have to be measured and corrected for.

Most of the above issues are difficult to resolve in the absense of actual measurements. In fact, the details of the calibration scheme have not yet been worked out. It appears, therefore, that this project is an R&D effort requiring a significant amount of prototyping and testing.

6) **Comment:** The electron beam has a finite emittance and may also wander slightly in the wiggler magnets. This must be taken into account since the angle of the synchrotron radiation is defined relative to the electron beam. In addition, a moving beam spot implies that even an infinitesimal solid angle defining aperture would permit a range of angles to enter the monochromator (unless the aperture has appreciable thickness). The impact on proper wavelength selection must be addressed.

Response: The emittance of the CEBAF beam is less than 10^{-9} m-rad. This gives an electron beam divergence of about 10^{-5} rad. This is smaller than the angle of collimation which is about 10^{-2} rad.

The monochromators have vertical plane diffraction. The vertical amplitude of betatron oscillations is smaller than the horizontal amplitude and its anticipated value is about 10 μm. This displacement of the beam centroid will create a deviation of the Bragg angle less than 10^{-5} rad. This angle deviation creates an error of about $\Delta E = 10^{-5} E_0$.

Comment: The emittance of the beam does not seem to pose a problem. The effect of a change in beam centroid position can be more serious however. Karabekov responded to this point verbally. The wavelength selection can be guaranteed by placing a K-edge absorption spectrometer in the path of the synchrotron beam (after the double crystal monochromator). Since the absorption line's wavelength is precisely known and the dependence of the wavelength selection on crystal orientation is known, one can then rotate the crystal to compensate for a beam position offset. (I. Karabekov mentioned that this technique has been successfully employed to measure beam positions.) This seems reasonable provided the beam centroid position is stable at a level of a few tens of microns.

Response: The wavelength selection can be absolutely guaranteed by placing a K-edge spectrometer in the path of the synchrotron beam after the double crystal monochromator. For example $CuK_{\alpha 1} = 1540.562\mathring{A}$ is known with an accuracy of 10^{-7}. This statement will be added to the article too.

7) **Comment:** The magnetic field must be measured accurately. This technique samples a small but finite portion of the magnets. There will be local variations in the field so that the NMR reading does not apply in the entire region viewed by the detectors. Provided the NMR reading represents the average field sampled, this may be less problematic. Even in this case, however, there will be an effect due to the nonlinear dependence of the synchroton spectrum on magnetic field.

Response: The proposed method to measure the absolute beam energy is based on the comparison of the intensities of two beams of synchrotron radiation generated in two magnets having different magnetic field intensities. We limited the length of the particle trajectory to $\Delta s \leq 10$ cm in the central part of the magnet. This region will be accurately mapped and referenced by one permanently installed NMR sample to avoid errors caused by current fluctuation in the magnets' coils. The vacuum chamber will be made of aluminium so the field integral in the reference part of the magnet will not change after installation of the chamber. The ionization chamber will integrate the photon flux from the mapped region of the magnet and this flux can be calculated with the accuracy of $\frac{\delta \int Bdl}{\int Bdl}$.

Comment: The synchrotron method samples a relatively small region (less than 10 cm) of the magnet. It seems reasonable to assume that the magnet can be mapped accurately over this region. Clearly, in this regard, this method is superior to the bend angle measurement methods which require knowledge of the field integral over the entire length of the magnet.

8) **Comment:** The two apparatus measuring each synchrotron beam must be aligned precisely. What is the required precision? Also, the efficiency–solid angle product for the two ionization chambers must be precisely matched. How will this be accomplished? (It is not sufficient to merely balance the dark currents in the

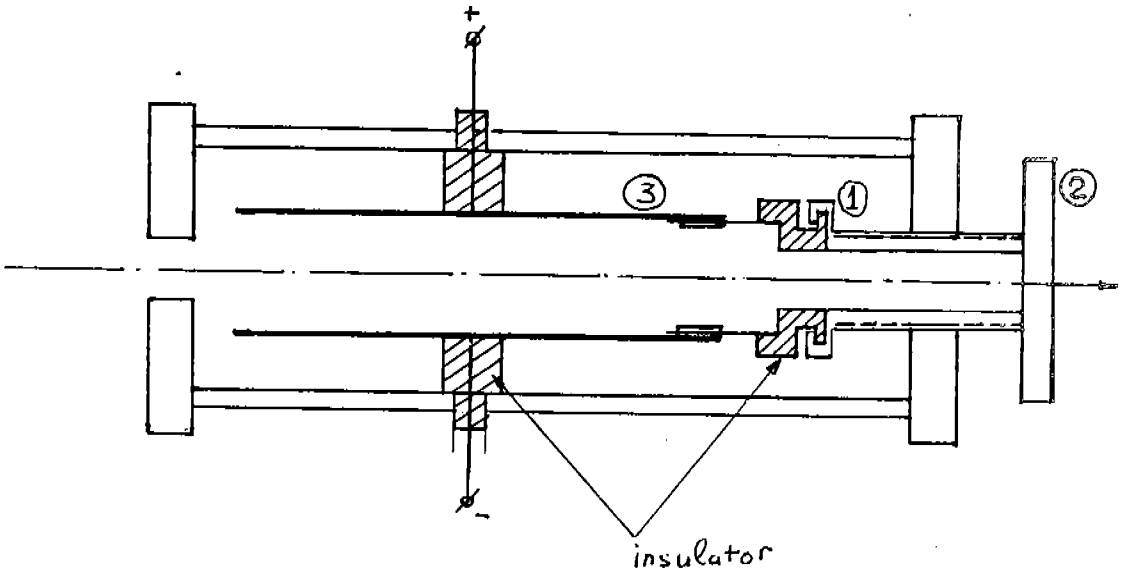

Figure 4. *Illustration of the method for tuning the length of an ionization chamber in the synchrotron radiation method. See the text for details.*

two detectors.) In order to verify that the detectors are matched, one must illuminate them with photon beams of known (or equal) intensity. The wavelengths of these calibration beams must match those for the actual energy measurement. How important are edge effects of the ionization chambers? (It is clear that near the edge the efficiency must rise from zero to nearly unity.) The bulging of the fringe fields will introduce position dependence to the effective path length of the ionization chamber.

Response: The two apparatus measuring each synchrotron beam must have equal sensitivity at the level of the accuracy designed for the energy measurement (*i.e.* for our case better than 10^{-4}). This goal can be achieved by tuning the length of one ionization chamber. An experimentally proven method is shown schematically in Figure 4. A plunger (1) driven by a micrometer screw (2) changes the length of the electrodes (3) until equality of the currents in the two chambers is achieved when they are illuminated by equal intensity radiation (the difference current should be minimal and at the level of the dark current). This procedure will compensate for the possible difference of the efficiency of ion collection at the ends of the chambers.

The schematic of the calibration procedure is presented in Figure 5. The calibration can be achieved using an X-ray beam (1) and one block of an $n+n$ rotating crystal monochromator (2) (coupled to a balancer made from the same but amorphous substance) which extracts photons of the desired wavelength λ_0. During

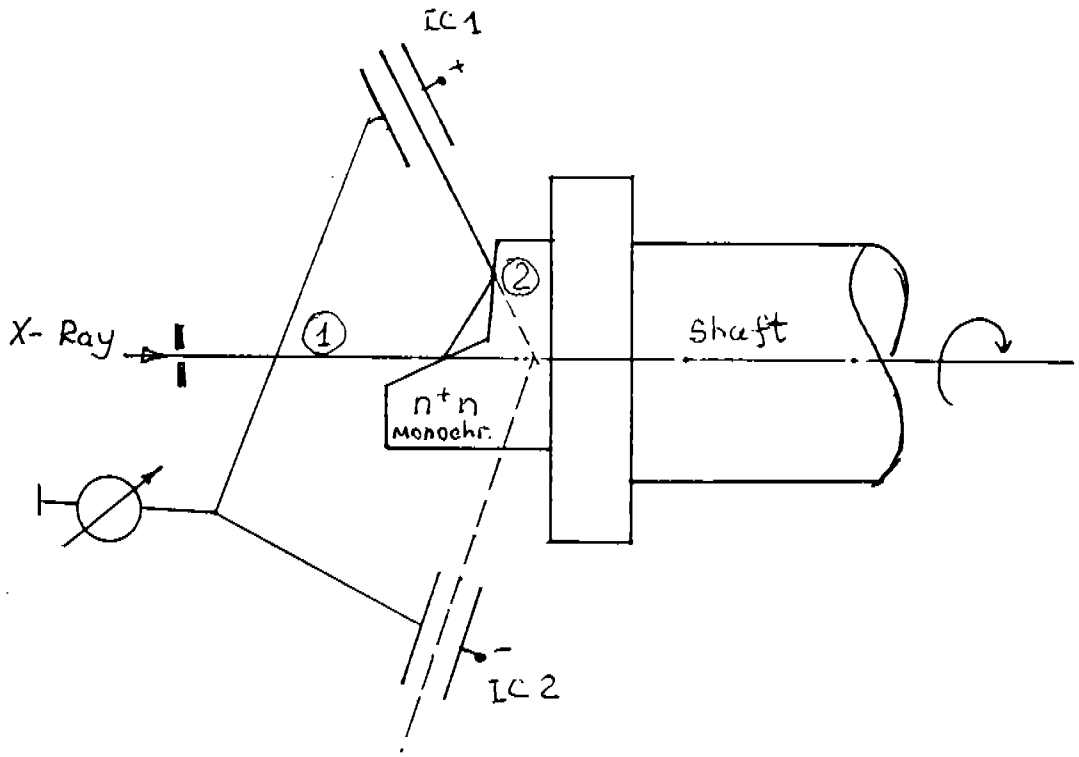

Figure 5. *Calibration procedure for the pair of ionization chambers in the synchrotron method. See the text for details.*

rotation photon fluxes of equal intensities will be directed into the ionization chambers for tuning.

Comment: The alignment tolerances still need to be specified. The calibration of the ionization chambers requires that the x-ray beams be of equal intensity at the less than 10^{-4} level. Although the calibration beams will take into account edge effects in the ionization chambers, the edge effects will vary as a function of beam position due to the nonuniform (bulging) fields. Therefore, the x-ray calibration beams should be aligned relative to the synchrotron beams. What is the required tolerance? It would clearly be desirable to perform the x-ray calibration *in situ*. Is this possible with the appartus described?

Response: Experimental investigation of the dependence of the current with beam position within the ionization chamber was carried out at the Yerevan Physics Institute. According to these investigations, the displacement of the X-ray beam centroid (with a beam diameter of about 2 mm) by ± 1 mm within the ionization chamber (having a gap of 10 mm and 30 cm long electrodes and supplied by 1000 V) creates an additional current difference of less than 10^{-13} A when the value of the current was at the level of 10^{-8} A. For a 1 m long chamber this dependence was an order of magnitude less. Nevertheless, the existence of this dependence requires having remote control of the alignment of the ionization chambers relative to the synchrotron beam axis with an accuracy of ± 0.25 mm.

The alignment of the two apparatus includes two main parameters. The Bragg angle θ will be set with an accuracy of a few by 10^{-5} rad (using a K-edge absorption spectrometer) and the ionization chamber axis will coincide with the bend plane with an accuracy equal to the vertical size of the synchrotron radiation beam (*i.e.* with an accuracy equal to half the beam width or ± 0.25 mm).

9) **Comment:** Apparently, the calibration procedure for the two detectors involves having each one of them, in turn, view the same magnet and then moving one of them to view the second magnet. There is some concern over the effect of moving the detector. Even if the cabling is not changed, there may be an effect due to the exact configuration of the cable which must change when the detector is moved.

   Response: Many years of experience with using ionization chambers in experimental investigations with synchrotron radiation beams at the Yerevan Physics Institute show that changing the configuration of the distribution of cables creates additional leakage with intensity of about 10^{-12} A per meter of cable length. This leakage current decays within 30 minutes.

   Comment: Does the calibration procedure outlined in response to comment # 8 require moving the ionization chambers? In this case, I must defer to the judgement of the experts. To answer this quantitatively probably requires prototyping.

10) **Comment:** It is not clear exactly how this method will be implemented. If a non-zero flux difference is observed, what steps are taken? Either some parameter in the system would have to be changed (such as the magnetic field ratio) or the energy would have to be calculated from the observed flux difference. In the latter case this becomes an absolute measurement.

    Response: There are two possibilities to measure the energy deviation.

    i.) One can measure the sum of the currents (*i.e.* the intensity of the radiation with additional ionization chambers). Then using a trivial normalization procedure (dividing the difference current by the sum) the absolute value of the energy deviation can be calculated.

    ii.) One can change the absolute value of the magnetic field in the magnets keeping the ratio (B_1/B_2) constant until a zero current difference in the differential ionization chamber is achieved. Then using the new values of B_1 and B_2 the absolute value of the energy deviation can be calculated.

    Comment: It is not clear how the energy is related to the current "asymmetry". In any case, it appears that the second method suggested is superior in that it does not require relating a current difference in the two ionization chambers to an energy difference.

2.4.3 Summary

This method has a couple of advantages: it is non-destructive to the beam and adequate statistical accuracy can be achieved in a matter of seconds. As for the accuracy of the method, most of the above issues can only be quantitatively resolved by developing prototypes and performing detailed measurements. Many of the calibration procedures are quite involved and some of the details have not yet been fully worked out. In particular, some of the calibrations involve moving mirrors to scan the laser beam and it is questionable whether the tight error tolerances can be maintained. Further, the actual methods to be used may require some trial and error and therefore this project is viewed as a significant R&D effort.

2.4.4 Summary Response by I. Karabekov

As Karabekov does not agree with the above summary and to the recommedations (see below), his final response summarizing the key issues is given here.

The proposed method has three guarantees:

1. The magnetic field integral within a small region (10 cm) of the bending magnet will be monitored by NMR probes.

2. The wavelength of radiation selected by the double crystal monochromator will be verified using a K-edge absorption spectrometer.

3. The ratio of the widths of the two slits, h_1/h_2, will be accurately measured.

There is no doubt that the magnetic field and wavelength can be measured with the required accuracies and no prototyping is required for this. The main point is the accuracy of the slit width ratio measurement. First, the required accuracy of 10^{-4} for slits of several millimeters can be achieved using microscopes. Second, one can make a set of slits to span the required energy range. This is not a serious obstacle and a set (10 or so) of slits would not be too expensive.

Regarding the slit width ratio, I now believe that the calibration technique using a laser and a rotating helical mirror is not the optimal solution and therefore suggest another method. Rather than using a narrow divergence laser, the slits can be calibrated using a source having a uniform distribution of emitted light. A light source of adequate uniformity can be found, for example, in ordinary fluorescent lights used in offices. I have consulted with light source specialists and they confirmed that this uniformity is equal to the uniformity of the gas density in the tube. Near the middle of the tube (far from the electrodes) the gas density uniformity is better than 10^{-4}. Alternatively, we could use a technique involving searchlights, *etc.*

I would also like to add a few comments regarding the calibration of the ionization chambers given Ulmer's concerns about the method employing the rotating monochromator. The intensity of synchrotron radiation has no dependence in the bending plane (*i.e.*

two extracted photon fluxes at the angles θ and $\theta + \Delta\theta$ have the same intensity). For the calibration I do not need to have monochromatized beams. So I will take two absolutely identical holes (both holes made by one drilling) and install them in the path of the synchrotron beams. Each ionization chamber will then be illuminated by equal intensity synchrotron radiation beams. The ionization chambers will then be adjusted so that their responses are equal up to the value of the dark current, *etc.*

3. Other Methods

The following methods have been suggested by various people but are not currently being vigorously pursued in Hall A. In most cases this is because of technical concerns for which there are no apparent solutions.

3.1 Compton Scattering

This technique involves scattering laser produced photons from the beam and measuring the energy of the scattered photons, a method which has been suggested by several people.[20][21] The energy of the scattered photon is given by

$$k' = \frac{k(e - p\cos\theta_k)}{e + k - p\cos\theta_{k'} - k\cos(\theta_{k'} - \theta_k)}$$

where e and p are the energy and momentum of the incident electron, k is the energy of the laser photon before scattering and θ_k and $\theta_{k'}$ are the angles of the photon with respect to the electron beam before and after the scattering respectively. For normal Compton backscattering, the initial angle, θ_k, is 180°.

The beam energy is determined by measuring the endpoint photon energy, k'_0. The maximum photon energy occurs for photons scattered at the angle $\theta^0_{k'}$ where

$$\cot\theta^0_{k'} = \cot\theta_k + \frac{p}{k\sin\theta_k}.$$

Note that this angle is very close to zero since the maximum transverse momentum imparted to the beam is k, and $k \ll p$. In order to evaluate the sensitivity of this method for determining the beam energy a couple of derivatives are needed:

$$\frac{dk'_0}{d\theta_k} = \frac{kp\sin\theta_k - k'_0\left[p\sin\theta^0_{k'}\frac{d\theta^0_{k'}}{d\theta_k} + k\sin(\theta^0_{k'} - \theta_k)\left(\frac{d\theta^0_{k'}}{d\theta_k} - 1\right)\right]}{e + k - p\cos\theta^0_{k'} - k\cos(\theta^0_{k'} - \theta_k)}$$

and

$$\frac{dk'_0}{de} = \frac{k\left(1 - \frac{e}{p}\cos\theta_k\right) - k'_0\left[1 - \frac{e}{p}\cos\theta^0_{k'} + p\sin\theta^0_{k'}\frac{d\theta^0_{k'}}{de} + k\sin(\theta^0_{k'} - \theta_k)\frac{d\theta^0_{k'}}{de}\right]}{e + k - p\cos\theta^0_{k'} - k\cos(\theta^0_{k'} - \theta_k)}$$

where

$$\frac{d\theta^0_{k'}}{d\theta_k} = \frac{\sin^2\theta^0_{k'}}{\sin^2\theta_k}\left(1 + \frac{p\cos\theta_k}{k}\right)$$

and

$$\frac{d\theta^0_{k'}}{de} = -\frac{e\sin^2\theta^0_{k'}}{pk\sin\theta_k}.$$

For small but finite θ_k we have

$$k'_0 \approx 2\gamma^2 k(1 - \cos\theta_k)$$

where we have taken $\theta_{k'} = 0$ since this is an excellent approximation for the angle corresponding to the endpoint energy. (Note that as θ_k approaches zero the above expression is invalid and in fact the derivative goes steeply to zero.) Thus, in this limit of small θ_k we have

$$\frac{\gamma}{k_0'}\frac{dk_0'}{d\gamma} \approx 2$$

where $\gamma = e/m$ and m is the electron mass.

For $\theta_k = 180°$ (*i.e.* Compton backscattering)

$$k' \approx k\frac{4\gamma^2}{1+4\gamma k/m}$$

so that

$$\frac{\gamma}{k_0'}\frac{dk_0'}{d\gamma} \approx 2\left(\frac{1+2\gamma k/m}{1+4\gamma k/m}\right)$$

Therefore, over most of the angular range (*i.e.* the angle between the incident photon and the electron beam), the scattered photon energy is approximately quadratic in γ. Thus, the photon energy must be determined to roughly 2×10^{-4} for a 10^{-4} measure of the beam energy in all cases.

As an example, consider a 2.41 eV (green) laser photon incident on a 4 GeV beam. For $\theta_k = 180°$, the photon endpoint energy is 515 MeV. In this case the endpoint energy is insensitive to the laser angle. However, the 515 MeV photon energy must be determined absolutely with a fractional uncertainty of 1.87×10^{-4} ($\sim$ 100 KeV) for a 10^{-4} measure of the beam energy. Apparently even with the best available Germanium detectors one cannot determine photon energies at this level of accuracy for such high energy photons. Another option is to shine the laser at small angles with respect to the electron beam. This has the advantage of producing scattered photons with relatively small energy. For example for $\theta_k = 1°$, the endpoint photon energy is 45 KeV. This energy must be determined with a fractional uncertainty of 2×10^{-4} (9 eV). However, the angle between the laser and the electron beam must now be determined to 1.7 μrad for a 10^{-4} measure of the beam energy. This seems difficult in light of the fact that the electron beam emittance implies an angular spread of order 20 μrad. In addition, the counting rates will be extremely small for laser angles other than 180° due to the small interaction length. This may be compensated by using mirrored surfaces to provide many crossings of the laser beam with the electron beam but then the control over the angle becomes even more questionable.

Another method has been suggested[22] which involves using a very long wavelength laser. By reducing the laser photon energy the endpoint energy is reduced so that the measurement can be performed at 180°. In this case, one is insensitive to the angle and one can use Ge detectors calibrated in the region of interest. The details of this method are currently being worked out[22]but, so far, this method seems promising.

The Compton method has the advantage of being non-destructive to the beam so that one can monitor the energy continuously during the course of an experiment. Another attractive feature of the method is its relative simplicity.

3.2 Møller Scattering

This method involves measuring the opening angle between the scattered and recoil electrons in Møller scattering. This angle is minimum for $\theta_{\rm cm}$=90°. In this case the two electrons emerge symmetrically about the beam direction and have equal momenta. The laboratory angle of either electron with respect to the beam is θ where

$$\tan\theta = \sqrt{\frac{2m}{e+m}} = \sqrt{\frac{2}{\gamma+1}}$$

where e is the electron beam energy, m is the electron mass and $\gamma = e/m$. The opening angle, $\Delta\theta$, is then twice this value and for small θ (*i.e.* large γ) is given by

$$\Delta\theta \approx \sqrt{\frac{8}{\gamma}}$$

Therefore, measurement of the minimum opening angle, $\Delta\theta$, with a fractional accuracy of 5×10^{-5} is required in order to determine the beam energy to 10^{-4}. As in the Compton method, this technique relies on measuring an endpoint value.

As an example, consider the case of a 4 GeV beam. The laboratory angle, θ, for $\theta_{\rm cm}$=90° is 0.92°. Thus the minimum opening angle is 1.84° and this angle must be determined with an accuracy of 1.6 μrad. If the two measurements involved in determining the opening angle are independent then each angle must be measured with an accuracy of roughly 1 μrad. This is clearly difficult but not impossible. A 10 meter flight path implies a position accuracy of about 10 μ which is at the current limit of silicon strip detectors. Further, multiple scattering in the target would have to be limited to about 10 μrad assuming one can determine a centroid to within 1/10 of the width.

There is a more severe limitation coming from the motion of the target electrons due to their binding in the atom. This motion affects the opening angle of the two electrons and therefore affects its minimum value. The worst case occurs when the target electron is moving along or against the beam direction. If p_0 is the momentum of the target electron the change in opening angle relative to a stationary target electron is

$$\delta(\Delta\theta) \approx \frac{p_0}{2m}\Delta\theta.$$

One can minimize this effect by using a hydrogen target where binding effects are relatively small and for which precise calculations can be done. For hydrogen the binding energy is E_b = 13.6 eV. Therefore momenta of order $\sqrt{2mE_b}$ = 3.7 KeV result. For the above example this gives a change in the minimum opening angle of 120 μrad. This is about 70 times larger than the accuracy requirement! Although, in principle, one can calculate this effect for hydrogen, this implies the need for very high precision in the calculation. It therefore seems unlikely that the accuracy goal can be achieved by measurement of the opening angle in Møller scattering.

3.3 Spin Precession

This technique relies on measuring the total spin precession angle through the accelerator for a polarized electron. By determining the bend angle as well one can extract the beam energy under certain assumptions. The Thomas-BMT equation for the motion of the spin implies that provided there is no electric field transverse to the particle's momentum and provided the magnetic field is perpendicular to the momentum everywhere along its trajectory the spin precession angle, χ, is simply related to the bend angle, θ_B:

$$\chi = \frac{g-2}{2}\gamma\theta_B$$

where $\gamma = e/m$ and g is the particle's gyromagnetic ratio. For an electron $(g-2)/2 = 1.16 \times 10^{-3}$. Thus, for an electron

$$\frac{\chi}{\theta_B} = 2.27e$$

where e is in GeV.

For the CEBAF accelerator with two linacs separated by bends of θ_1 and θ_2 respectively (nominally $\theta_1 = \theta_2 = \pi$), the spin precession angle for an n-pass beam is:

$$\chi = \frac{g-2}{2m}\Big\{\big[n\theta_1 + (n-1)\theta_2\big]e_I + \frac{n}{2}\big[(n+1)\theta_1 + (n-1)\theta_2\big]e_1 + \frac{n(n-1)}{2}(\theta_1+\theta_2)e_2 + \big[e_I + n(e_1+e_2)\theta_h\big]\Big\}$$

where e_I is the energy boost in the injector, e_1 and e_2 are the energy boosts in the first and second linacs respectively (assumed to be the same for each pass) and θ_h is the bend angle into the experimental hall after the last linac. Note that the term within the last set of square brackets is the final energy (*i.e.* the desired quantity). One can rewrite the above expression as:

$$\chi = \frac{g-2}{2m}\Big\{e_I\Big(\frac{\theta_t-\theta_h}{2}\Big) + e\Big(\frac{\theta_t+\theta_h}{2}\Big) + \frac{n\Delta e}{2(2n-1)}\big[\theta_t - \theta_h + (n-1)\Delta\theta\big]\Big\}$$

where

$$\begin{aligned} e &= e_I + n(e_1+e_2) = \text{final energy} \\ \Delta e &= e_1 - e_2 \\ \theta_t &= n\theta_1 + (n-1)\theta_2 + \theta_h = \text{total bend angle} \\ \Delta\theta &= \theta_1 - \theta_2. \end{aligned}$$

Solving for the final energy, we have:

$$e = \frac{\frac{4m\chi}{g-2} - e_I(\theta_t-\theta_h) - \frac{n\Delta e}{2n-1}\big[\theta_t - \theta_h + (n-1)\Delta\theta\big]}{\theta_t+\theta_h}.$$

If one is limited to measurements of the total (i.e. from source to endstation) precession and bend angles, there is an uncertainty arising from the uncertainty in the injector energy boost as well as uncertainty in the difference between energy boosts for the two linacs, Δe. In addition, there is an uncertainty arising from the difference in bend angle for the two

sets of recirculating arcs; however, this angle difference, $\Delta\theta$ comes with a factor of Δe so that its effect on the energy determination is very small. Taking derivatives of the above expression gives:

$$\frac{de}{d\chi} = \frac{4m}{g-2}\eta$$
$$\frac{de}{de_I} = -(\theta_t - \theta_h)\eta$$
$$\frac{de}{d\Delta e} = -\frac{n}{2n-1}\left[\theta_t - \theta_h + (n-1)\Delta\theta\right]\eta$$
$$\frac{de}{d\Delta\theta} = -\frac{n(n-1)\Delta e}{2n-1}\eta$$
$$\frac{de}{d\theta_t} = \left[-e - e_I - \frac{n\Delta e}{2n-1}\right]\eta$$
$$\frac{de}{d\theta_h} = \left[-e + e_I + \frac{n\Delta e}{2n-1}\right]\eta$$

where $\eta = 1/(\theta_t + \theta_h)$. Evaluating the derivatives at the nominal values of $\theta_1 = \theta_2 = \pi$, $\theta_h = 37.5°$ (bend into Hall A), $\Delta e = 0$ and $e_I = 45$ MeV the values shown in Table 1 result.

# of passes	$de/d\chi$ GeV/rad	de/de_I	$de/d\Delta e$	$de/d\Delta\theta$ GeV/rad	$(e+e_I)^{-1}de/d\theta_t$ rad^{-1}	$(e-e_I)^{-1}de/d\theta_h$ rad^{-1}
1	0.198	−0.706	−0.706	0	−0.225	−0.225
2	0.082	−0.878	−0.585	0	−0.093	−0.093
3	0.052	−0.923	−0.554	0	−0.059	−0.059
4	0.038	−0.944	−0.539	0	−0.043	−0.043
5	0.030	−0.956	−0.531	0	−0.034	−0.034

Table 1 *Sensitivity of beam energy to various uncertainties in a spin precession measurement as a function of the number of passes through the accelerator.*

Next, the maximum allowed uncertainties in each of the relevant quantities are calculated assuming that each contributes an error of 10^{-4} to the energy measurement. These values are displayed in Table 2 and are calculated assuming an injector energy of 45 MeV. The fractional error in the linac energy, δe_L, is computed such that the resulting error in the difference between the energy boosts for the two linacs, $\delta(\Delta e)$, gives rise to a 10^{-4} uncertainty in the beam energy and also assumes that the measurement of the two linac energies are uncorrelated (thus, $\delta e_L = \delta(\Delta e)/\sqrt{2}$). Naturally, in order to have a total

e GeV	# of passes	$\delta\chi$ mr	$\delta e_I/e_I$	$\delta e_L/e_L$	$\delta\theta_t$ mr	$\delta\theta_h$ mr
0.8	1	0.40	2.5×10^{-3}	2.1×10^{-4}	0.42	0.47
1.6	2	2.0	4.0×10^{-3}	5.0×10^{-4}	1.0	1.1
2.4	3	4.6	5.8×10^{-3}	7.8×10^{-4}	1.7	1.7
3.2	4	8.4	7.5×10^{-3}	1.1×10^{-3}	2.3	2.4
4.0	5	13	9.3×10^{-3}	1.4×10^{-3}	2.9	3.0

Table 2 *Allowed tolerances assuming each quantity contributes 10^{-4} to the energy uncertainty. The energy boost in each linac is denoted e_L and here it is assumed that the difference in linac boosts, Δe, contributes 10^{-4} uncertainty in the energy measurement.*

uncertainty of 10^{-4} one must have somewhat smaller uncertainties than those listed in the table.

It is apparent that the measurement becomes easier as the energy (and number of passes) increases. The best case is for a 4 GeV (5-pass) beam and in this case the injector energy must be known to roughly 10^{-2} and the linac energy boosts must be known at the 10^{-3} level. Note that only the difference in linac boosts matters, so this constitutes a relative measurement between the two linacs. Further, the total bend angle and bend angle into the hall must be known at the 3 mr level. The precession angle must be determined to about 13 mr (0.7°). (This corresponds to roughly 10^{-4} of the 22 rotations of the spin vector.)

The injector energy requirement of 10^{-2} is not too stringent and is not expected to present a problem. The same is true for the determination of the bend angle into the experimental hall. The total bend angle may be more of a challenge since one must be able to relate beam position monitors at the injector to monitors in the endstation. Measurement of the difference in the linac boosts may not be trivial but a 10^{-3} measurement does not appear prohibitive. Finally, determination of the spin precession angle to 13 mr may present a challenge. If one uses the Møller technique (which, unfortunately, is destructive) one could determine the spin angle either by measuring both the transverse and longitudinal components by rotating the target polarization vector or by varying the spin direction at the source and determining where the longitudinal asymmetry vanishes. The former method has the disadvantage of having to change the target magnetic field and the relatively lower asymmetry for the transverse component (1/7 of the longitudinal). Both methods are relatively free of errors due to uncertainty in the target polarization since this cancels in determining the spin angle. One also needs to know the spin orientation at the source in order to determine the precession angle.

The above analysis assumes that the bend angle in both the East and West arcs is a constant for all passes (although a global difference between the two sets of arcs has been

taken into account and was shown to be unimportant) and also that the energy boost for a given linac is the same for all passes. In addition, there are some disadvantages to the precession method:

1) requires polarized beam

2) requires polarimetry which may be destructive

3) requires measurements at various locations in the accelerator rather than confining the measurement to one location

An even more serious problem has been pointed out.[23] The recirculator arcs have both dipole and quadrupole magnetic elements. Electrons which have some motion out of the horizontal plane will get bent vertically by the quads. The spin will consequently precess about a horizontal axis. A sequence of vertical bends will in general produce a net precession out of the plane even if the particle returns to its original vertical position. Thus, such nonplanar orbits destroy the simple relation between bend and precession angles. This can be even more serious for the spreader/recombiner magnets.

4. Recommendations

(P. Ulmer)

Disclaimer: *These are my recommendations and do not necessarily represent the opinions of the other co-authors of this document. Further, the recommendations here are based purely on my technical assessment and do not reflect cost issues.*

So far, five methods have been identified which appear to have the potential for absolute energy measurement at or near the 10^{-4} level. They include the beamline arc system, the elastic ep scattering method, the three magnet chicane, the synchrotron radiation technique and the Compton scattering technique. Although the Compton technique was not originally thought to be viable (and was therefore not included in the CEBAF meeting nor in the discussion section of this document), recent developments indicate that the main technical obstacles can be resolved. Therefore, this method is included in this section.

As all the methods seem promising, in the ideal world where money and time are of no object, it would be desirable to pursue each one. Having several methods would allow a determination of the systematic error of the absolute measurement. In addition, since there are still technical issues which can probably only be resolved by actual measurements with prototypes, pursuing several methods would minimize the risks in case some of them would be found to be unworkable. However, given the realities of limited funding and the desire to have a working system within 2–3 years, it may be necessary to limit the number of parallel developments. Therefore, I present here my recommendations based on a technical analysis of each of the methods.

Currently, the Compton scattering method seems to be the most promising. In addition to being non-destructive, its relative simplicity suggests that it has a high probability of success and may also be the simplest to operate and maintain. Although it requires very accurate determination of both the incident and scattered photon energies, it is free of the technical difficulties inherent in those magnetic systems requiring accurate field integral measurements.

It would also be desirable to have a fast measurement of relative energy changes. As the arc magnets will be available, it seems natural to exploit them. At the very least, the relative energy measurement system, employing a non-intercepting monitor near the midpoint of the arc beamline, should be implemented. The absolute measurement which requires accurate angle and field integral measurements will probably not meet the required level of 10^{-4} although there is no obvious obstacle to reaching two or three times this goal. In any case, knowledge of beam orbit through the arcs may prove useful and can provide a cross check on the absolute measurement.

It would be very useful to have another system in place which can achieve the accuracy requirement of 10^{-4} as another cross check, especially if the arc method is not capable of

reaching this goal. For both the ep elastic and synchrotron methods there is currently no known technical obstacle to achieving this level of accuracy. The main disadvantage of the ep method is that it is destructive to the beam and so cannot be used as a continuous monitor during the course of an experiment. The synchroton technique does not suffer from this limitation. In addition, it is significantly faster than the ep method (several seconds compared to several minutes). The main concern is the complexity of the synchrotron method which makes this technique a very significant R&D effort. In my opinion, although the synchrotron method may prove to be viable, it is the most risky of all the five methods.

Finally, the three magnet chicane also offers the possibility of absolute measurement near the 10^{-4} level, although there are still technical concerns which need to be answered to properly assess this. The chicane requires accurate knowledge of the field integral although only one magnet need be measured. The main concern is the large intrinsic width of the synchrotron bands. If their centroids can be determined with the stated accuracy, the chicane method, as an absolute device, is probably superior to the arc method due to the chicane's relative simplicity. However, it is premature to embark on this path until the above mentioned technical detail can be quantitatively answered.

5. Appendix: Synchrotron Radiation Calculation

The full formula for the synchrotron radiation photon flux intensity is:[24]

$$N_k(\gamma,\psi) = a^2\gamma^{-2}(1+\psi^2\gamma^2)^2\Big\{K_{2/3}^2\Big(\frac{a\gamma^{-2}}{2}(1+\psi^2\gamma^2)^{3/2}\Big) + \frac{\psi^2\gamma^2}{1+\psi^2\gamma^2}K_{1/3}^2\Big(\frac{a\gamma^{-2}}{2}(1+\psi^2\gamma^2)^{3/2}\Big)\Big\}\cdot C$$

which can be written as

$$N_k(\gamma,\psi) = C\times\Big[\overbrace{a^2\gamma^{-2}K_{2/3}^2(z)}^{A_1} + \overbrace{2a^2\psi^2K_{2/3}^2(z)}^{A_2} + \overbrace{a^2\gamma^2\psi^4K_{2/3}(z)}^{A_3} + \overbrace{a^2\psi^2K_{1/3}^2(z)}^{B_1} + \overbrace{a^2\psi^4\gamma^2K_{1/3}^2(z)}^{B_2}\Big]$$

where

$z = \frac{a\gamma^{-2}}{2}(1+\psi^2\gamma^2)^{3/2}$; $C = 3.461\times10^6\frac{\Delta\lambda}{\lambda}I$ in units of [mA, mrad, 1/sec];

$a = \frac{7.12\cdot10^3}{B\lambda}$; λ is the synchrotron radiation wavelength in cm; $\gamma = E_0/m_0c^2$

and B is the magnetic field strength.

The derivatives of A_1, A_2, A_3, B_1 and B_2 are as follows:

$$A_1' = 2a^2\gamma^{-2}K_{2/3}(z)\Big[-K_{1/3}(z) - \frac{2}{3z}K_{2/3}(z)\Big] \times \overbrace{\Big[\frac{3}{2}\frac{a\psi^2}{\gamma}(1+\psi^2\gamma^2)^{1/2} - a\gamma^{-3}(1+\gamma^2\psi^2)^{3/2}\Big]}^{z'} - 2a^2\gamma^{-3}K_{2/3}^2(z)$$

$$A_2' = 4a^2\psi^2K_{2/3}(z)\Big[-K_{1/3}(z) - \frac{2}{3z}K_{2/3}(z)\Big](z')$$

$$A_3' = 2a^2\psi^4\gamma K_{2/3}^2(z) + 2a^2\gamma^2\psi^4K_{2/3}(z)\Big[-K_{1/3}(z) - \frac{2}{3z}K_{2/3}(z)\Big](z')$$

$$B_1' = 2a^2\psi^2K_{1/3}(z)\Big[-K_{2/3}(z) - \frac{1}{3z}K_{1/3}(z)\Big](z')$$

$$B_2' = 2a^2\psi^4\gamma\Big\{K_{1/3}^2(z) + \gamma K_{1/3}(z)\Big[-K_{2/3}(z) - \frac{1}{3z}K_{1/3}(z)\Big](z')\Big\}$$

6. References

[1] P. Ulmer *et al.*, *Physics Requirements on the Determination and Stability of the Parameters of the Beam*, CEBAF Tech. Note 90-255 (1990).

[2] CEBAF Proposal PR-93-041, P.E. Ulmer, spokesman (1993).

[3] CEBAF Proposal PR-89-003, R. Lourie, A. Saha, L. Weinstein and W. Bertozzi, spokespersons (1989).

[4] CEBAF Proposal PR-89-044, J. Mougey, A. Saha, M.B. Epstein and R. Lourie, spokespersons (1989).

[5] J. Berthot, P.Y. Bertin, V. Breton, C. Comptour, H. Fonvielle and O. Ravel, *Absolute Incident Energy Measurement at the level of* $\Delta E/E \sim 10^{-4}$, unpublished (1993).

[6] D. Neuffer, C. Yan and R. Carlini, *Hall C Beam Momentum Measurement System*, CEBAF Tech. Note 92-054 (1992).

[7] Pascal Vernin, *Using the arc for absolute energy measurement in Hall A or C?*, unpublished (1993).

[8] Will Oren, memo to P. Vernin regarding *Energy Spectrometer Angle Measurement*, April 29, 1993.

[9] C. Yan, R. Carlini and D. Neuffer, *Beam Energy Measurement using the Arc Beamline as a Spectrometer*, CEBAF PR-93-004 (1993).

[10] A. Saha and S. Esp, *Beamline Chicane for Determination of Energy and Polarization for Hall A*, unpublished (1993).

[11] E.L. Brodsky *et al.*, *Implementation and test of a synchrotron radiation position monitor at a user beam line*, Rev. Sci. Instr. **63**, 519 (1992).

[12] J. Kent *et al.*, *Precision measurements of the SLC beam energy*, SLAC-PUB-4922 (1989).

[13] W. Oren, private communication (1993).

[14] I.P. Karabekov and R. Rossmanith, Nucl. Instr. and Meth. **A321**, 18 (1992).

[15] J.D. Jackson, *Classical Electrodynamics, 2nd edition*, John Wiley & Sons (1975).

[16] G.K. Green, *Spectra and Optics of Synchrotron Radiation*, BNL 50522, April 1976 and BNL 50595, February 1977.

[17] A.A. Sokolov and I.M. Ternov, *Synchrotron Radiation*, "Nauka" Edition, Moscow (1966).

[18] A.A. Sokolov and I.M. Ternov, *Radiation from Relativistic Electrons*, American Institute of Physics, New York (1986).

[19] Edward F. Zalewski and C. Richard Duda, *Silicon photodiode device with 100% external quantum efficiency*, Applied Optics, Vol. 22, p. 2867 (1983).

[20] A.T. Margarian, *Laser and a New Nonmagnetic Method for the Tagging of Monochromatic Electrons and Photons*, Yerevan Physics Institute, Preprint YERPHI 1403(14)-93 (1993).

[21] L. Miceli, private communication (1993).

[22] R. Ent and P. Welch, private communication (1993).

[23] R. Rossmanith, private communication (1993) and I. Karabekov and R. Rossmanith, *Transportation of Polarized Beams Through the CEBAF Arcs*, CEBAF Tech. Note 93-054 (1993).

[24] The synchrotron radiation formulae have been provided by I. Karabekov.