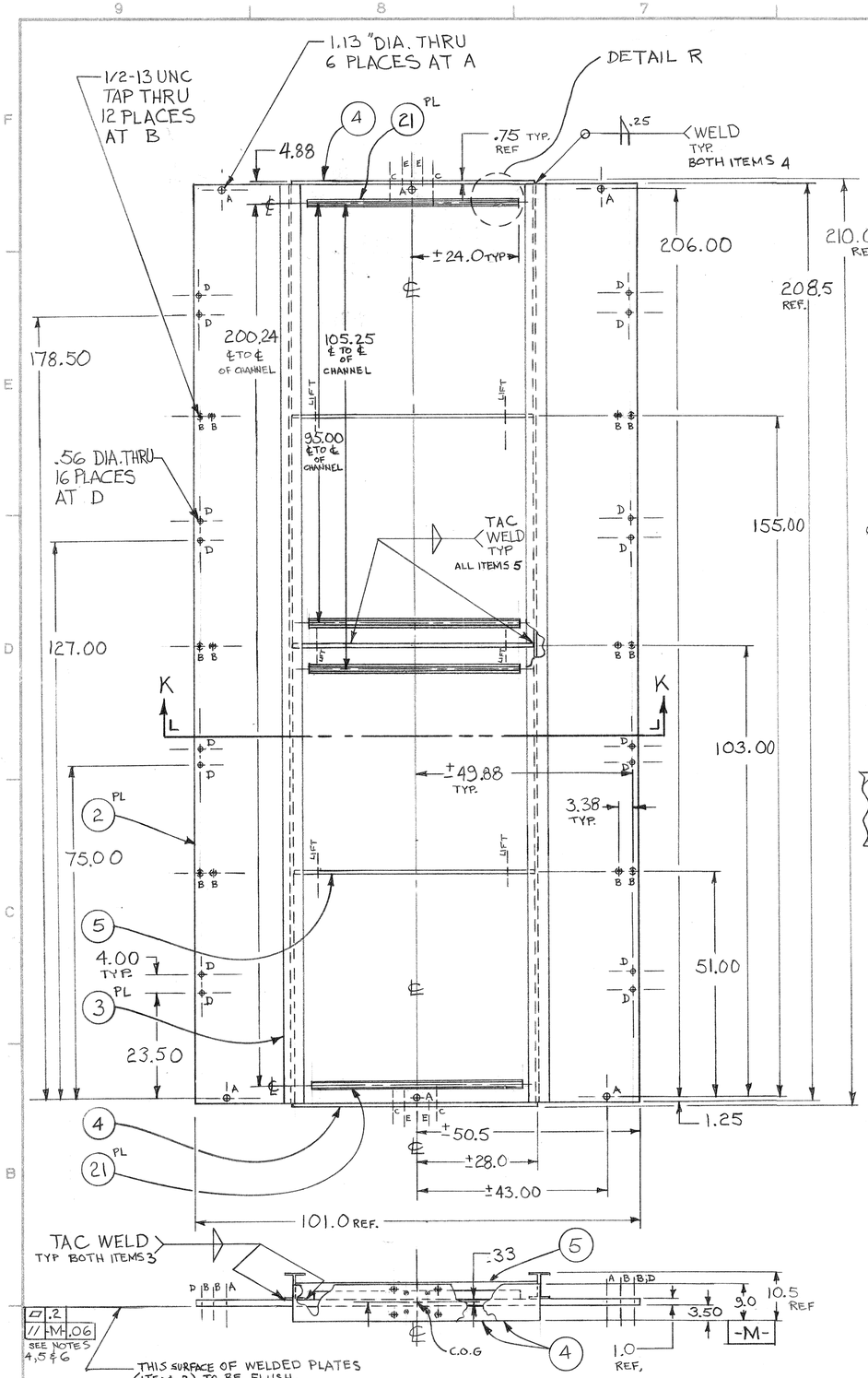

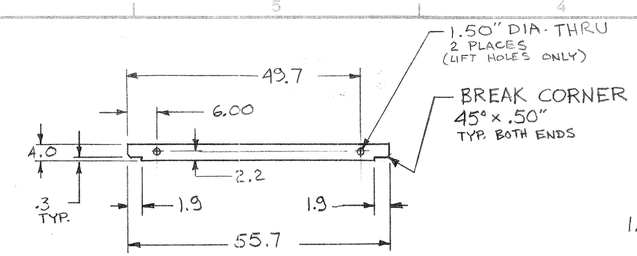

5 SPACER

SCALE: 1:15 WT. 41 lbs.
MAT'L: .75" to 1.4" THK LOW CARBON STEEL
QTY: 3 REQ'D. PER SUB-ASSY
18 REQ'D PER FINAL ASSY.

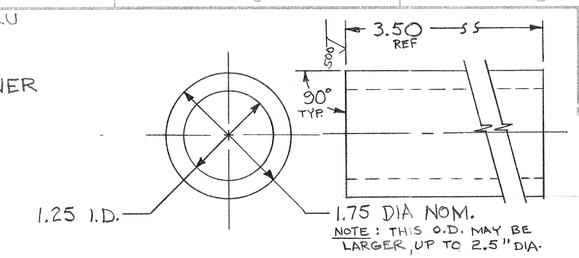

6 STANDOFF

SCALE: 1:1
MAT'L: 3.50" LG. PIPE, MILD STL.
QTY: 4 REQ'D. PER SUB. ASSY (SEE SECTION K-K)
28 REQ'D PER FINAL ASSY.

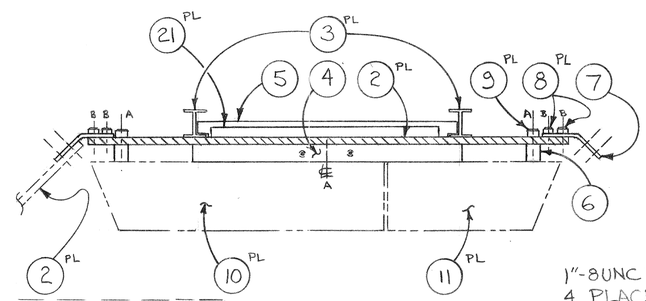

GENERAL NOTES:

1. BREAK ALL SHARP EDGES 45° × .03".
2. ALL TAPPED HOLES TO BE CLASS 2B OR BETTER.
3. EDGES MAY BE FLAME CUT.
4. ITEM 2 MAY BE MADE FROM 2 OR MORE PLATES THAT MUST BE FLUSH ON SIDE AWAY FROM "I"-BEAMS. (SEE ITEM 1, FRONT VIEW)
5. IF PLATE (ITEM 2) IS BOWED, CONCAVE SIDE TO FACE AWAY FROM I-BEAMS
6. TAC WELDS TO COVER 50% OF PERIPHERY OR MORE.

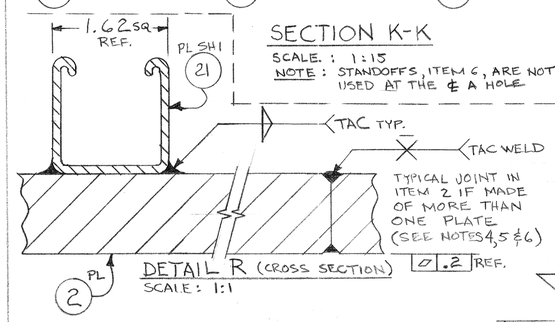

SECTION K-K

SCALE: 1:15
NOTE: STANDOFFS, ITEM 6, ARE NOT USED AT THE ℄ A HOLE

DETAIL R (CROSS SECTION)

SCALE: 1:1

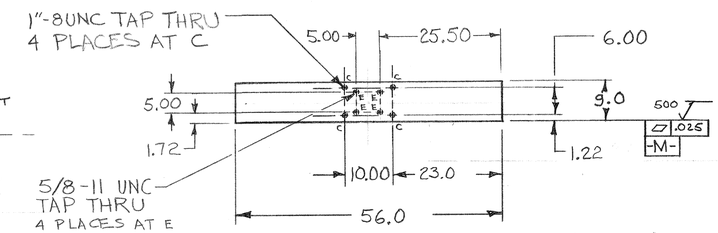

4 LIFT PLATE

SCALE: 1:15 WT. 107 lbs
MAT'L: 75" THK. LOW CARBON STEEL
QTY: 2 REQ'D. PER SUB-ASSY.
12 REQ'D PER FINAL ASSY.

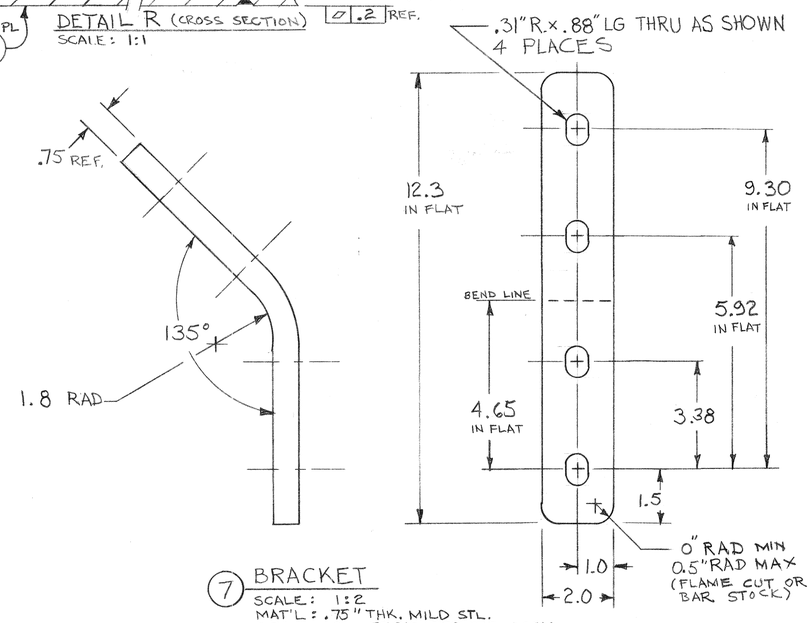

7 BRACKET

SCALE: 1:2
MAT'L: .75" THK. MILD STL.
QTY.: 3 REQ'D PER SUB-ASSY.
24 REQ'D PER FINAL ASSY.

1 MUON SHIELD, SIDE - SUB-ASSEMBLY

SCALE: 1:15
QTY: 5 REQ'D (WITHOUT ITEMS 21, CHANNEL)
WT.: 7300 lbs.

22 MUON SHIELD, SIDE (PLATFORM) - SUB-ASSY

MAT'L: SAME AS ITEM 1 BUT ADD ITEMS 21 (CHANNEL)
QTY.: 1 REQ'D.

SYM.	ZONE	REVISIONS DESCRIPTION	DATE	APP.
A		ITEM 2 THICKNESS CHANGED FROM 1.1" THK. - NOTE 5 CHANGED. ITEM 2 WELDING CHANGED SEE DETAIL R ITEM 2 FLATNESS SPEC CHANGED TMK	5/6/87	

ITEM	DWG. NO.	DESCRIPTION	G1	G2	G3	REMARKS	REV.
21	6052-310 SH 1	SINGLE CHANNEL × 48" LG		4		PURCHASE UNISTRUT #P1000 OR EQUIV.	
11	6052-303 SH 12	OUTER MUON STL, II-(SIDE)				SHOWN FOR REF. ONLY	
10	6052-303 SH 12	OUTER MUON STL, I-(SIDE)				SHOWN FOR REF. ONLY	
9	6052-310 SH 1	SOC. HD. CAP. SCREW 1-8UNC × 6.00" LG. STN. STL	6	6		SHOWN FOR REF. ONLY	
8	SH 1	SOC. HD. CAP. SCREW 1/2-13 UNC × 1.75" LG. STN. STL	6	6		SHOWN FOR REF. ONLY	
7	SH 1	BRACKET	3	3			
6	SH 1	STANDOFF	4	4			
5	SH 1	SPACER	3	3			
4	SH 1	LIFT PLATE	2	2			
3	SH 1	I-BEAM, 6.0" × 4.0" × .28" × 208.5" LG. 12 lbs/FT.	2	2			
2	SH 1	MUON SHIELD PLATE, SIDE 208.5" × 101.0" × 1.0" LOW C STL.	1	1		6550 lbs	
1	6052-310 SH 1	CLEO II MAG YOKE MUON SHIELD, SIDE - SUB-ASSY.	X			7300 lbs	
22	6052-310 SH 1	CLEO II MAG YOKE MUON SHIELD SIDE (PLATFORM) - SUB-ASSY.		X		7320 lbs	

PRINT DISTR. CRY EH-1

UNLESS OTHERWISE SPECIFIED
DIMENSIONS ARE IN INCHES
TOLERANCES ON:
.0 ±.1
.00 ±.05
.000
FRACTIONS
ANGLES ±2°
ALL SURFACES

CHECKED BY
APPROVED BY

Cornell University
Floyd R. Newman Laboratory of Nuclear Studies – Ithaca, NY 14853-5001

CLEO II MAGNET YOKE MUON SHIELD, SIDE AND SIDE (PLATFORM)

DRAWN BY	DRAWN FOR	DATE	SCALE	SIZE	DWG. NO.	REV.
TMK	NORDBERG	11/21/86	AS NOTED	D	6052-310 SH. NO. 1 CONT. ON 2	A

6052-310 SH. NO. 1 CONT. ON 2 REV. A

2 EM.