REVISION HISTORY				
ZONE	REV	DESCRIPTION	DATE	APPROVED

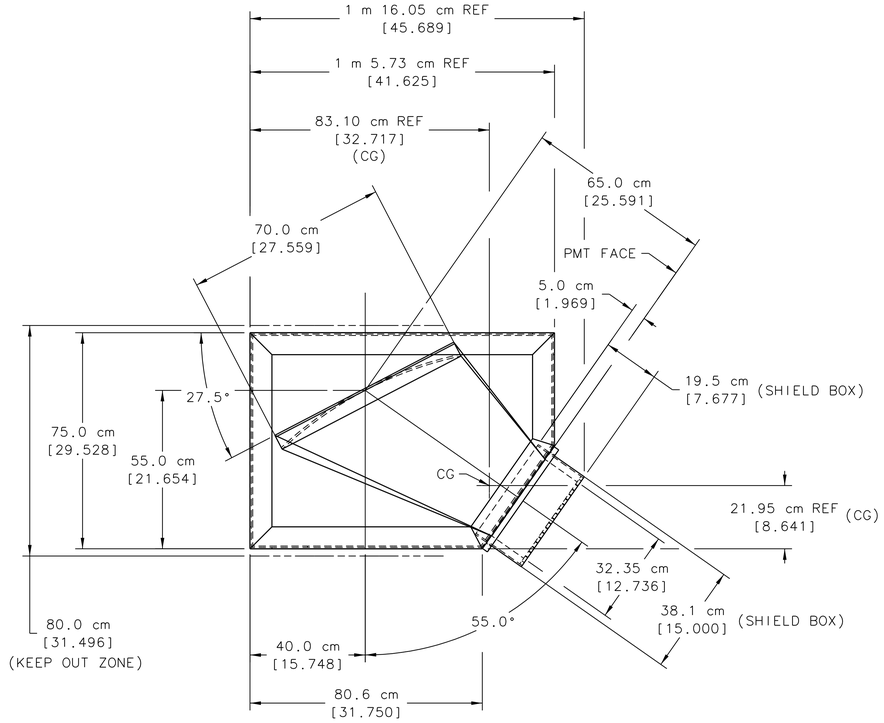

TOP VIEW 1-7E

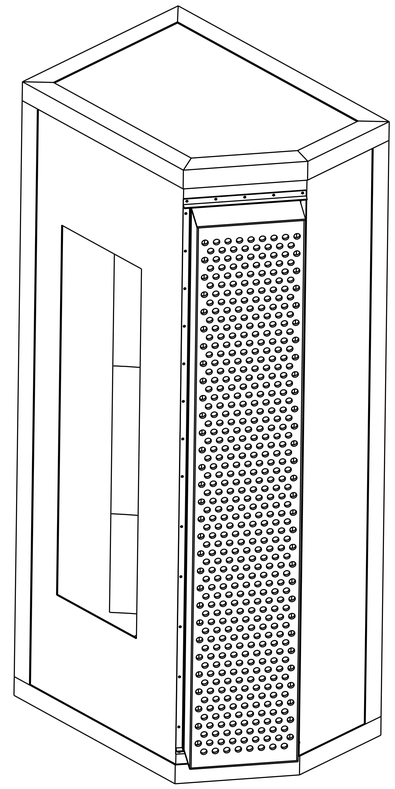

ISO VIEW 1-3E

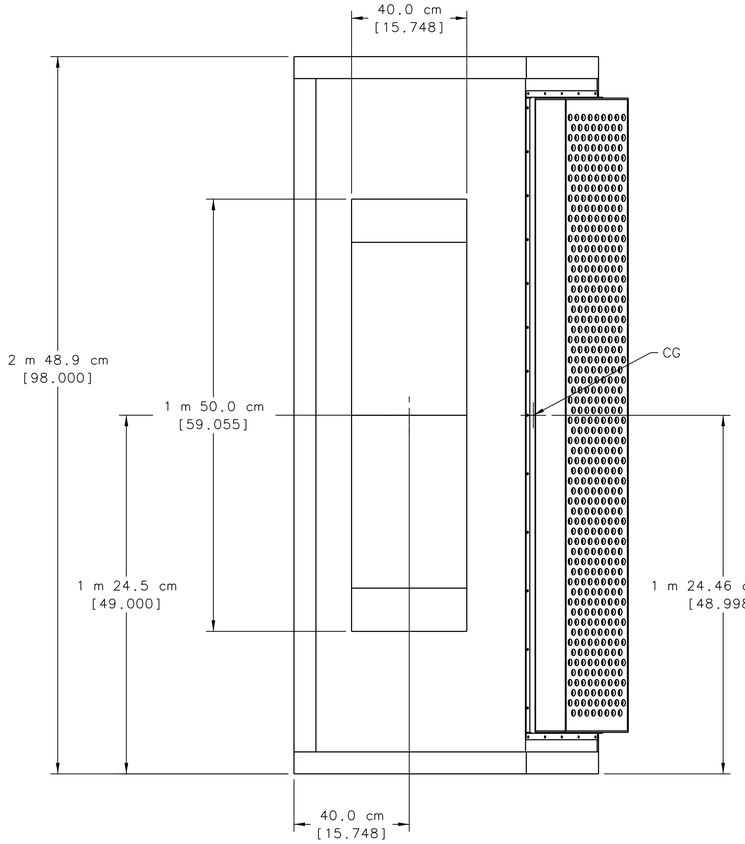

FRONT VIEW 1-7A

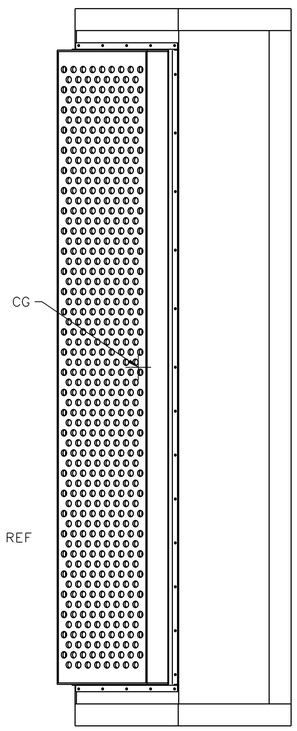

R SIDE VIEW 1-5A

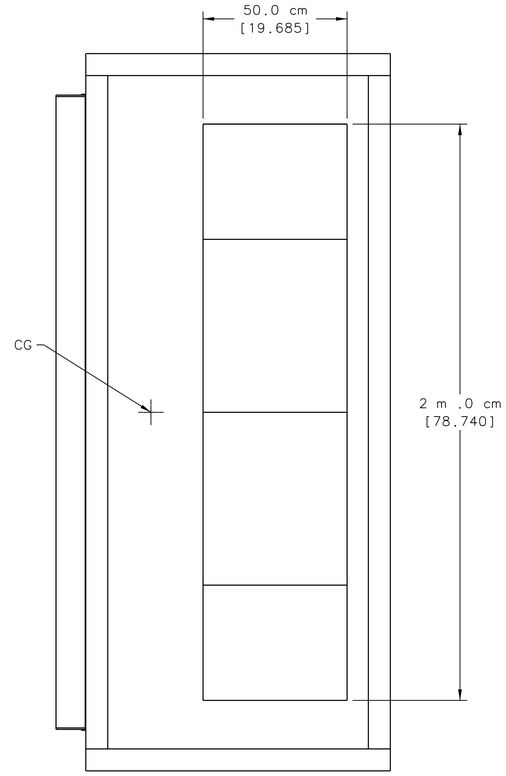

REAR VIEW 1-4A

PRELIMINARY

THIS IS NOT A RELEASED DRAWING AND IS TO BE USED FOR QUOTATION AND PLANNING PURPOSES ONLY

NOTES:

1. ENVELOPE OF PMT ARRANGEMENT APPROX 400 LBS.
   MAGNETIC SHIELDING BOX WEIGHT APPROX 206 LBS.
   ALUMINUM MAIN FRAME WELDMENT APPROX 267 LBS.

   GRINCH DETECTOR TOTAL WEIGHT APPROX 873 LBS.

EACH SHEET OF MULTI-SHEET DRAWINGS SHALL ALWAYS HAVE THE SAME REVISION LEVEL.

DOCUMENT CONTROL STAMP

MATERIAL: AS NOTED

FINISH: MACHINED SURFACES 125 UNLESS OTHERWISE NOTED; DEBURR & BREAK ALL SHARP EDGES.

DO NOT SCALE DRAWING

DIM & TOL PER ASME Y14.5. UNLESS OTHERWISE SPECIFIED DIMENSIONS ARE IN INCHES. TOLERANCES ARE:
FRACTIONS ± N/A; DECIMAL .X ± .1, .XX ± .01, .XXX ± .005; ANGLES ± .50°

THIRD ANGLE PROJECTION

TRACKING NO. N/A

APPROVALS	DATE
DRAWN S. ESP	17 OCT 12
CHECKED	
APPROVED	
APPROVED	

United States Department of Energy — Jefferson Lab, Thomas Jefferson National Accelerator Facility — Newport News Virginia

HALL A - GENL EQPT - DETECTOR
BIG BITE SBS
BB SBS ELECTRON DET STACK
GRINCH DETECTOR ASSY

SIZE E | DWG. NO. A00000-01-01-2500 | REV. –

SCALE 1:8 | USED ON ASSY NO. A00000-01-16-0300 | SHEET 1 OF 1