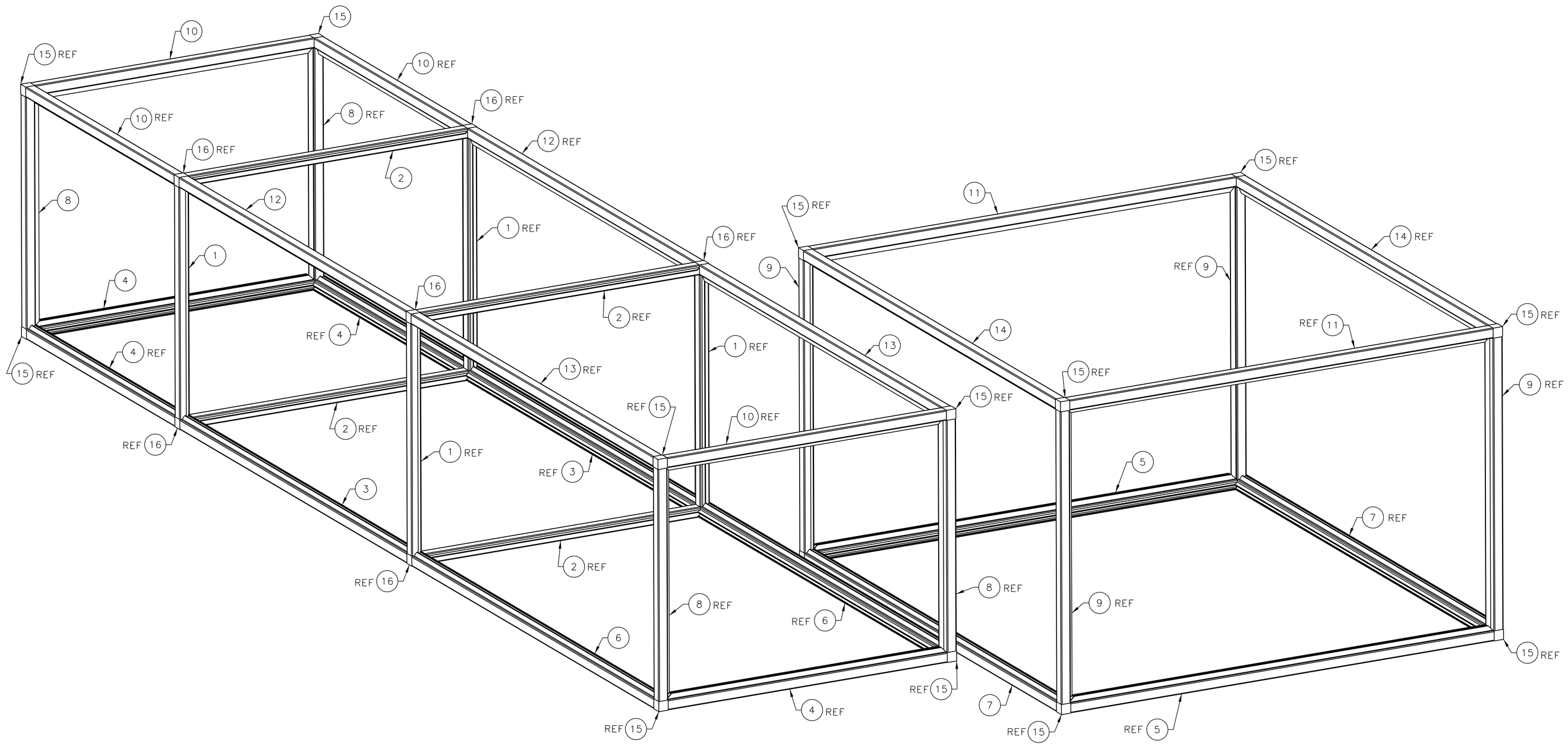

QUICK FRAME ONLY 2-5C

(SCALE 1:4)

NOTES:

1. WEIGHT IS APPROXIMATELY 200 LBS.

DOCUMENT CONTROL STAMP	SIZE	DWG. NO.	REV.
	E	A06010-17-00-0400	–
	SCALE 1:8	USED ON ASSY NO. A06010-17-00-0000	SHEET 2 OF 2