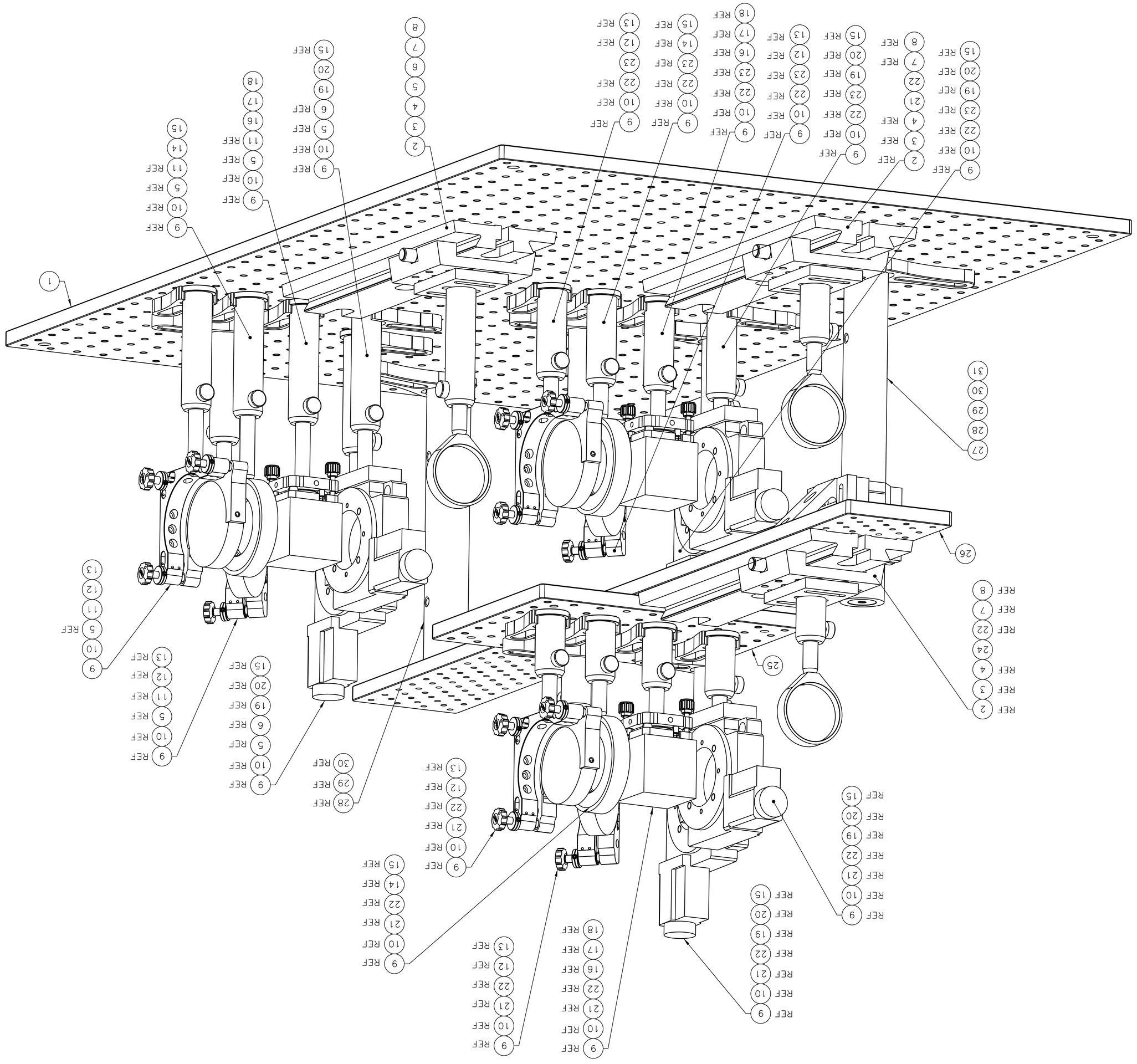

NOTES:

1. WEIGHT IS APPROXIMATELY 100 LBS.

EACH SHEET OF MULTI-SHEET DRAWINGS SHALL ALWAYS HAVE THE SAME REVISION LEVEL.

PARTS LIST

QTY	ITEM NO	PART OR IDENTIFYING NO.	NOMENCLATURE OR DESCRIPTION	MATERIAL SPECIFICATION	NOTES
1	1	THORLABS INC. MB2436	BREADBOARD - 24 x 36 x 1/2 IN	BLACK ANODIZED ALUMINUM	-
3	2	NEMPORT CORP. PRL-12	PRECISION OPTICAL RAIL 12 IN (304.8 MM) LG	ALUMINUM	-
3	3	NEMPORT CORP. PRC-3	PRECISION OPTICAL CARRIER	ALUMINUM	-
3	4	THORLABS INC. BA2	MOUNTING BASE 2 x 3 x 3/8	ALUMINUM	-
7	5	THORLABS INC. PH4-ST	1/2 IN DIA POST HOLDER 4.0 IN LONG	ALUMINUM	-
3	6	THORLABS INC. POST TR3	1/2 IN DIA x 3.0 IN LONG	STNLS STL	-
3	7	THORLABS INC. LMR2	LENS MOUNT FOR 2 IN DIA OPTICS ONE SNZRR RETAINING RING INCL	ALUMINUM	-
3	8	THORLABS INC. LB1247-B	COATED BI-CONVEX LENS LENS 2 - 50.8 MM DIA	GLASS	-
18	9	THORLABS INC. CF125	SMALL CLAMPING FORK	STNLS STL	-
18	10	THORLABS INC. BE1	PEDESTAL BASE ADAPTER FOR 1 IN DIA POST	STNLS STL	-
4	11	THORLABS INC. POST TR4	1/2 IN DIA x 4.0 IN LONG	STNLS STL	-
6	12	NEMPORT CORP. U300-A3K	KINEMATIC MOUNT, 76.2 MM 3 LOCKING ACTUATORS	-	-
6	13	NEMPORT CORP. 3D010BD.2	BROADBAND DIELECTRIC MIRROR 76.2 DIA. 14.7 MM THK	PYREX	-
3	14	THORLABS INC. RSP2	ROTATION MT FOR 2.0" DIA OPTICS ONE SNZRR RETAINING RING INCL	-	-
9	15	-	ROT 1/4 WAVE PLATE	-	-
3	16	NEMPORT CORP. P100-HA	HORIZONTAL ADAPTER	ALUMINUM	-
3	17	NEMPORT CORP. V100-P2	PLATFORM OPTICAL MOUNT 50.8 MM, 2 ACTUATORS	ALUMINUM	-
3	18	OPCO LABORATORY INC. PBS 2 x 2	BEAM SPLITTER CUBE 2.0 IN SIDES	GLASS	-
6	19	A06010-17-00-0101	ROT STAGE ADAPTER	ALUMINUM	-
6	20	STANDA 8MR190-2-28	MOTORIZED ROTATION STAGE 50.8 MM APERTURE W/ STPR MOTOR	-	-
7	21	THORLABS INC. PH2-ST	POST HOLDER - 2 IN LONG FOR 1/2 IN DIA POST	ALUMINUM	-
14	22	THORLABS INC TR2	POST 1/2 IN DIA x 2.0 IN LONG	STNLS STL	-
6	23	THORLABS INC. PH3-ST	POST HOLDER - 3.0 IN LONG FOR 1/2 IN DIA POST	ALUMINUM	-
1	24	THORLABS INC. PH1.5-ST	POST HOLDER - 1.5 IN LONG FOR 1/2 IN DIA POST	ALUMINUM	-
1	25	THORLABS INC. MB810	BREADBOARD - 8 x 10 x 1/2 IN 1/4-20 THREAD	BLACK ANODIZED ALUMINUM	-
1	26	THORLABS INC. MB436	BREADBOARD - 4 x 36 x 1/2 IN 1/4-20 THREAD	BLACK ANODIZED ALUMINUM	-
1	27	THORLABS INC. C1505	MOUNTING POST BRACKET FITS ON 1-1/2 IN DIA POSTS	ALUMINUM	-
2	28	THORLABS INC. PF175	CLAMPING FORK	ALUMINUM	-
2	29	THORLABS INC. PB4	PEDESTAL BASE ADAPTER FOR 1-1/2 IN DIA POST	STNLS STL	-
2	30	THORLABS INC. P10	MOUNTING POST 1-1/2 IN DIA x 10 IN LONG	STNLS STL	-
1	31	THORLABS INC. P1.5	MOUNTING POST 1-1/2 IN DIA x 1-1/2 IN LONG	STNLS STL	-

DOCUMENT CONTROL STAMP	THIRD ANGLE PROJECTION	TRACKING NO. N/A	APPROVALS DATE
			DRAWN S. ESP 04 JUN 08
			CHECKED
			APPROVED
			APPROVED
			APPROVED

DIM & TOL PER ASME Y14.5-1994
UNLESS OTHERWISE SPECIFIED DIMENSIONS ARE IN INCHES TOLERANCES ARE:
.XX ± .01 ± .50°
.XXX ± .005
DECIMAL ANGLES
± N/A

MATERIAL AS NOTED

FINISH MACHINED SURFACES NOTED DEBURR & BREAK ALL SHARP EDGES

UNLESS OTHERWISE NOTED 125

DO NOT SCALE DRAWING

Jefferson Lab
United States Department of Energy
Thomas Jefferson National Accelerator Facility
Newport News Virginia

HALL A -TRANSVERSITY- E06-010
LASER
DRIVE LASER
BREADBOARD 2 WITH OPTICS

SIZE E DWG. NO. A06010-17-00-0200 REV. -

SCALE 1:2 USED ON NEXT NO A06010-17-00-0000 SHEET 1 OF 2

ZONE	REV	DESCRIPTION	DATE	APPROVED

REVISION HISTORY