REVISION HISTORY				
ZONE	REV	DESCRIPTION	DATE	APPROVED
1-8G 1-4A	A	ADDED 8x #10-24 UNC THRU HOLES AND A .250 DIA DOWEL HOLE. CREATED A NEW DETAIL VIEW 1-4A THAT DESCRIBES THE SLOT ADDED.	13 AUG 08 14 AUG 08	SME ARG
1-8G 1-8D 1-3G	B	ADDED FEATURES (5 HOLES) FOR THE BEO VIEW CAMERA & LOCATING DIMS 9.625 & 5.099. CREATED DETAIL VIEW 1-8D. ADDED A .750 DIA CBORE x .125 DP TO EXST .344 THRU HOLES - 4 PLACES	26 AUG 08	SME

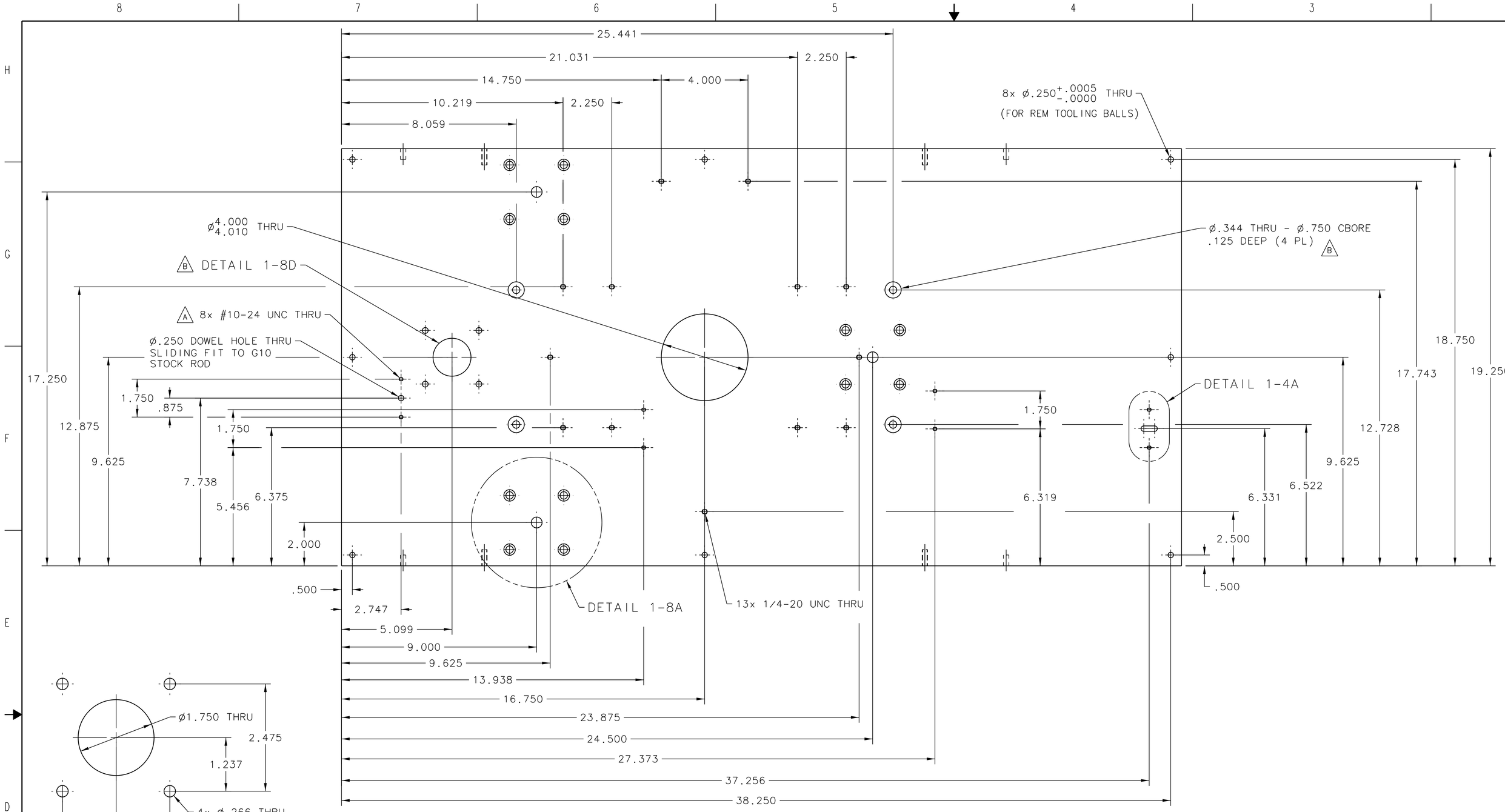

TOP VIEW 1-5D

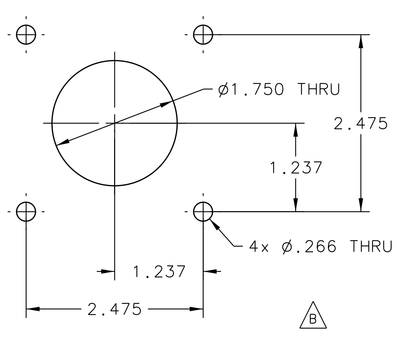

DETAIL VIEW 1-8D

SCALE 1:1
(1-5D)

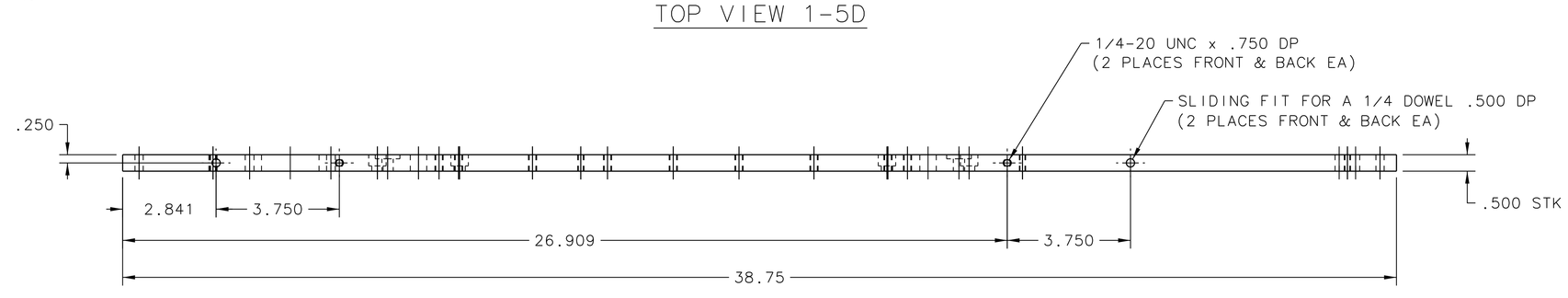

FRONT VIEW 1-5C

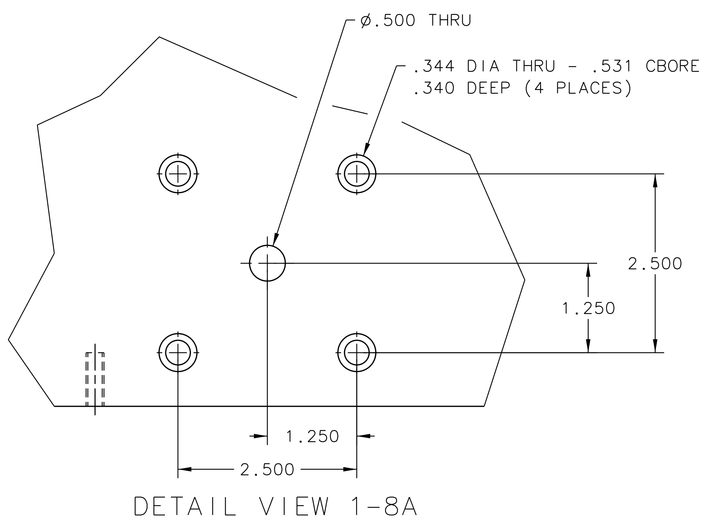

DETAIL VIEW 1-8A

TYPICAL 3 PLACES
SCALE 1:1
(1-5D)

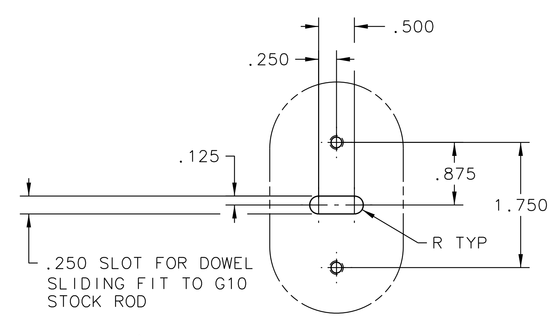

DETAIL VIEW 1-4A

SCALE 1:1
(1-5D)

NOTES:

1. WEIGHT IS APPROXIMATELY 24 LBS.

EACH SHEET OF MULTI-SHEET DRAWINGS SHALL ALWAYS HAVE THE SAME REVISION LEVEL.

DOCUMENT CONTROL STAMP	DIM & TOL PER ASME Y14.5 UNLESS OTHERWISE SPECIFIED DIMENSIONS ARE IN INCHES TOLERANCES ARE: FRACTIONS ± N/A; DECIMAL .X ±.1, .XX ±.01, .XXX ±.005; ANGLES ±.50°	TRACKING NO. N/A	United States Department of Energy — Jefferson Lab, Thomas Jefferson National Accelerator Facility — Newport News Virginia
MATERIAL G10	THIRD ANGLE PROJECTION	APPROVALS / DATE	HALL A -TRANSVERSITY- E06-010 STATIC SUBSYSTEM PU COIL - COLIM - DUMP ASSY MOUNTING PL FOR PU-COLIM-DUMP
FINISH MACHINED SURFACES 125 UNLESS OTHERWISE NOTED; DEBURR & BREAK ALL SHARP EDGES		DRAWN S. ESP — 29 JUL 08	
DO NOT SCALE DRAWING		CHECKED ALAN R. CAVALYA — 29 JUL 08	SIZE E; DWG. NO. A06010-03-06-0101; REV. B
		APPROVED ALAN R. CAVALYA — 29 JUL 08	
		APPROVED JIAN-PING CHEN — 31 JUL 08	SCALE 1:2; USED ON ASSY NO. A06010-03-06-0100; SHEET 1 OF 1