REVISION HISTORY				
ZONE	REV	DESCRIPTION	DATE	APPROVED

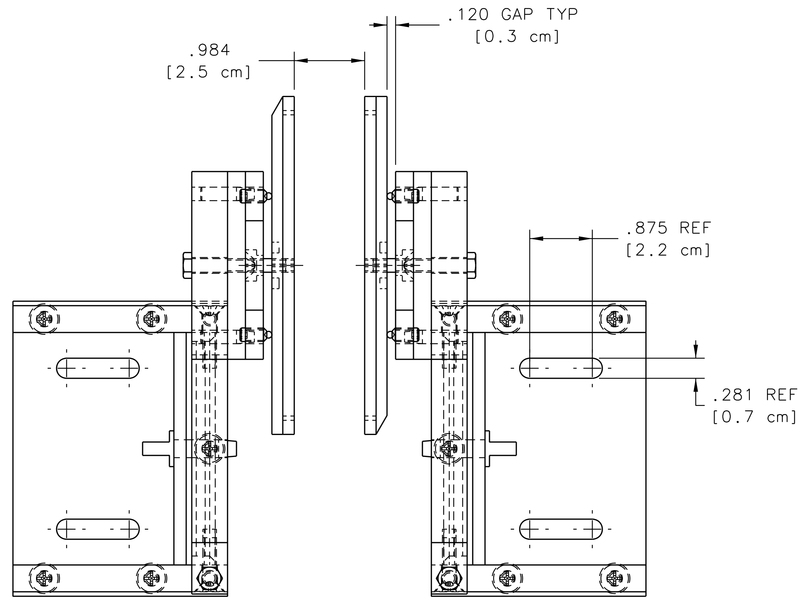

TOP VIEW 1-7F

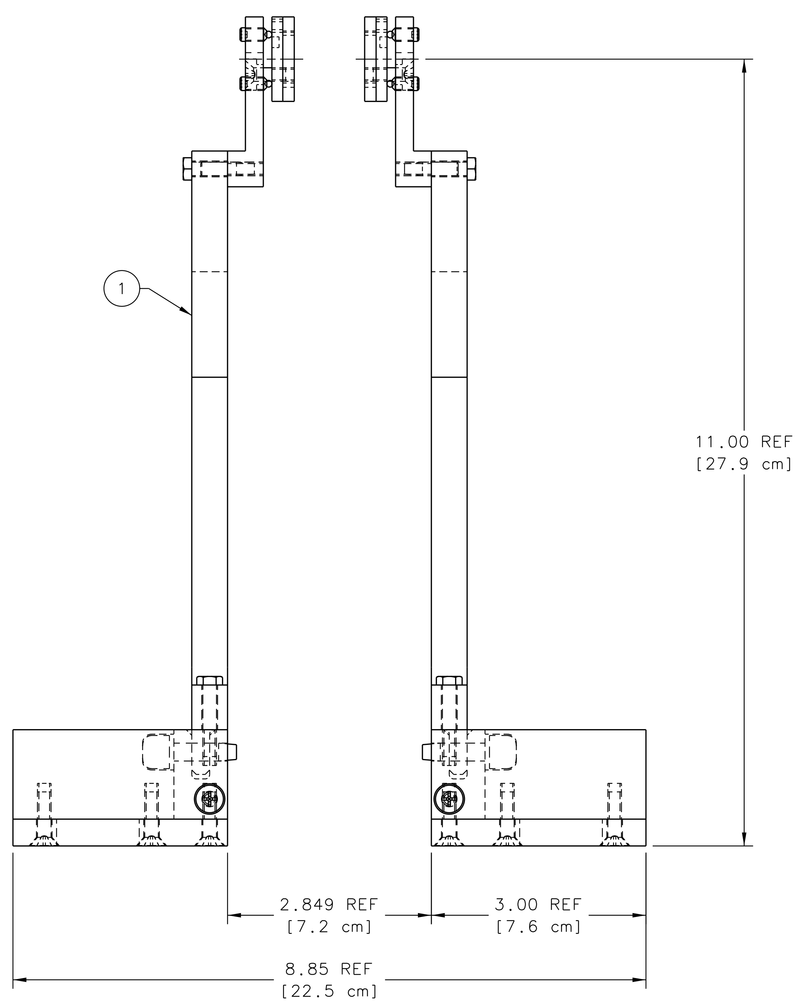

FRONT VIEW 1-7B

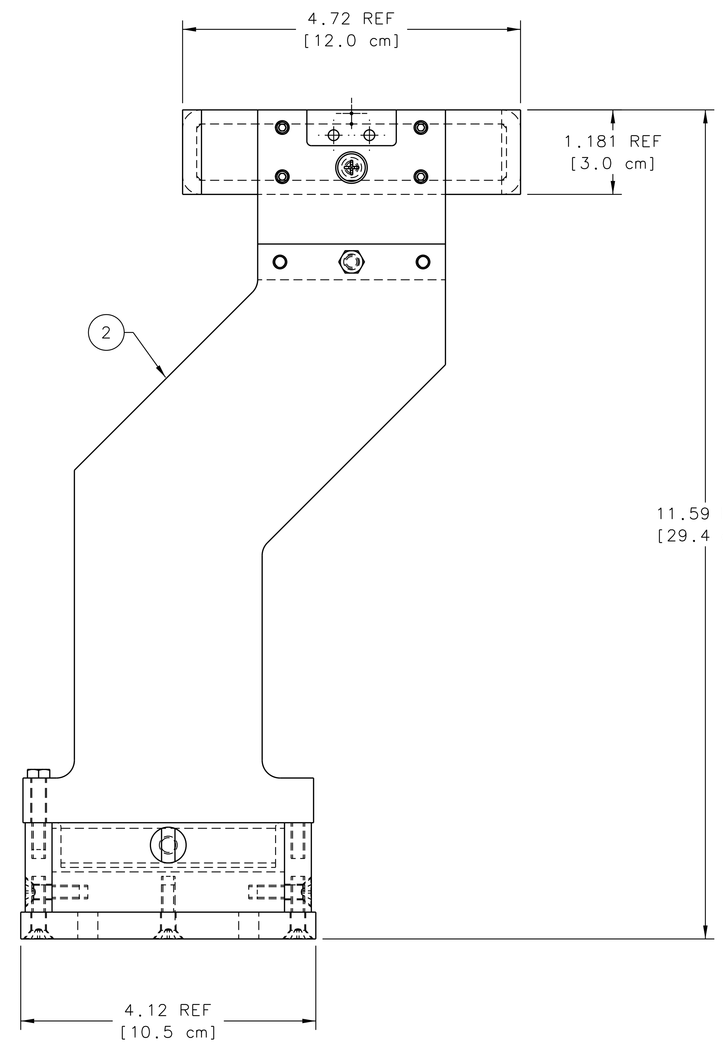

R SIDE VIEW 1-5B

NOTES:

1. WEIGHT IS APPROXIMATELY 3 LBS.

QTY. REQD	ITEM NO.	PART OR IDENTIFYING NO.	NOMENCLATURE OR DESCRIPTION	MATERIAL SPECIFICATION	NOTES
1	2	A06010-03-06-1200	PICKUP COIL W/ MIR PL SUBASSY	-	-
1	1	A06010-03-06-0900	PICKUP COIL W/ PLATE SUBASSY	-	-

PARTS LIST

EACH SHEET OF MULTI-SHEET DRAWINGS SHALL ALWAYS HAVE THE SAME REVISION LEVEL.

DOCUMENT CONTROL STAMP

MATERIAL: AS NOTED

FINISH MACHINED SURFACES 125√ UNLESS OTHERWISE NOTED
DEBURR & BREAK ALL SHARP EDGES

DO NOT SCALE DRAWING

DIM & TOL PER ASME Y14.5
UNLESS OTHERWISE SPECIFIED
DIMENSIONS ARE IN INCHES
TOLERANCES ARE:
FRACTIONS ± N/A DECIMAL .X ± .1 .XX ± .03 .XXX ± .005 ANGLES ± .50°

THIRD ANGLE PROJECTION

TRACKING NO. N/A

APPROVALS	DATE
DRAWN S. ESP	02 MAY 08
CHECKED	
APPROVED	
APPROVED	

United States Department of Energy

Jefferson Lab
Thomas Jefferson National Accelerator Facility

Newport News Virginia

HALL A
TRANSVERSITY - EXP E06-010
STATIC SUBSYSTEM
PICKUP COIL PAIR ASSY

SIZE E | DWG. NO. A06010-03-06-0800 | REV. –

SCALE 1:1 | USED ON ASSY NO. A06010-03-06-0100 | SHEET 1 OF 1