75600B0185

DWG. NO.	SHT.	REV.
75600-B-0185		

REVISIONS

ZONE	REV.	DESCRIPTION	DATE	APPROVED

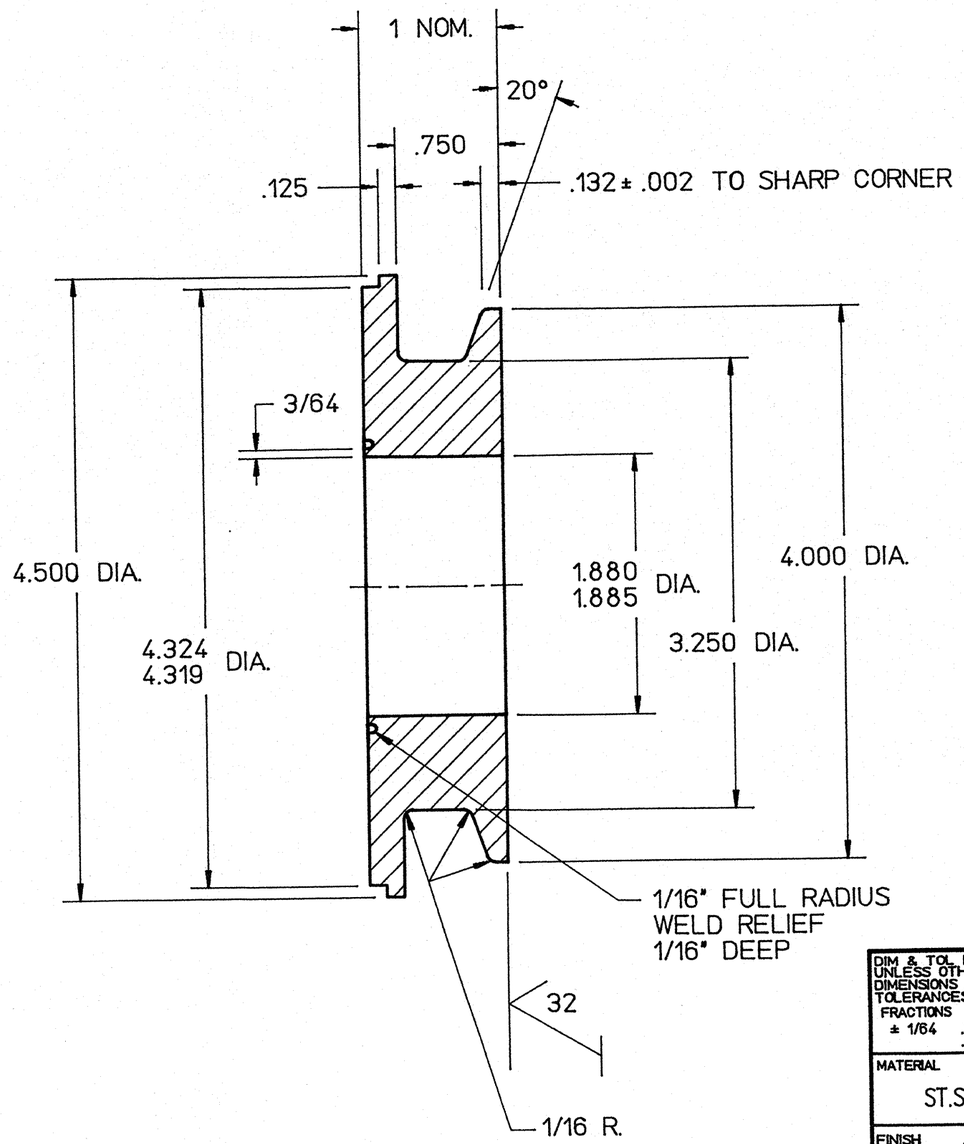

DIM & TOL PER ANSI Y14.5
UNLESS OTHERWISE SPECIFIED
DIMENSIONS ARE IN INCHES
TOLERANCES ARE:
FRACTIONS ± 1/64 DECIMAL .XX ± .XXX ± .005 ANGLES ± 1°

MATERIAL: ST.STL.,TYPE 304

FINISH 125 UNLESS OTHERWISE NOTED

DEBURR & BREAK ALL SHARP EDGES

DO NOT SCALE DRAWING

CADD I.D. NO. /wbs1579/wbs_7/wbs_7_5/75600/B0185

APPROVALS	DATE
DRAWN M. ZARECKY	12/18/89
CHECKED DHK	1/31/90
APPROVED/ORIGINATOR DHK	1/31/90
APPROVED DHKarey	1/31/90

CEBAF
The Continuous Electron Beam Accelerator Facility
NEWPORT NEWS, VIRGINIA
UNITED STATES DEPARTMENT OF ENERGY

U-TUBE FLANGE, 2" MALE BAYONET
(4" IPS SCH-5 JACKET)

SIZE	DWG. NO.	REV.
B	75600-B-0185	–

SCALE FULL | USED ON ASSY NO. 75300-E-0029 | SHEET 1 OF 1