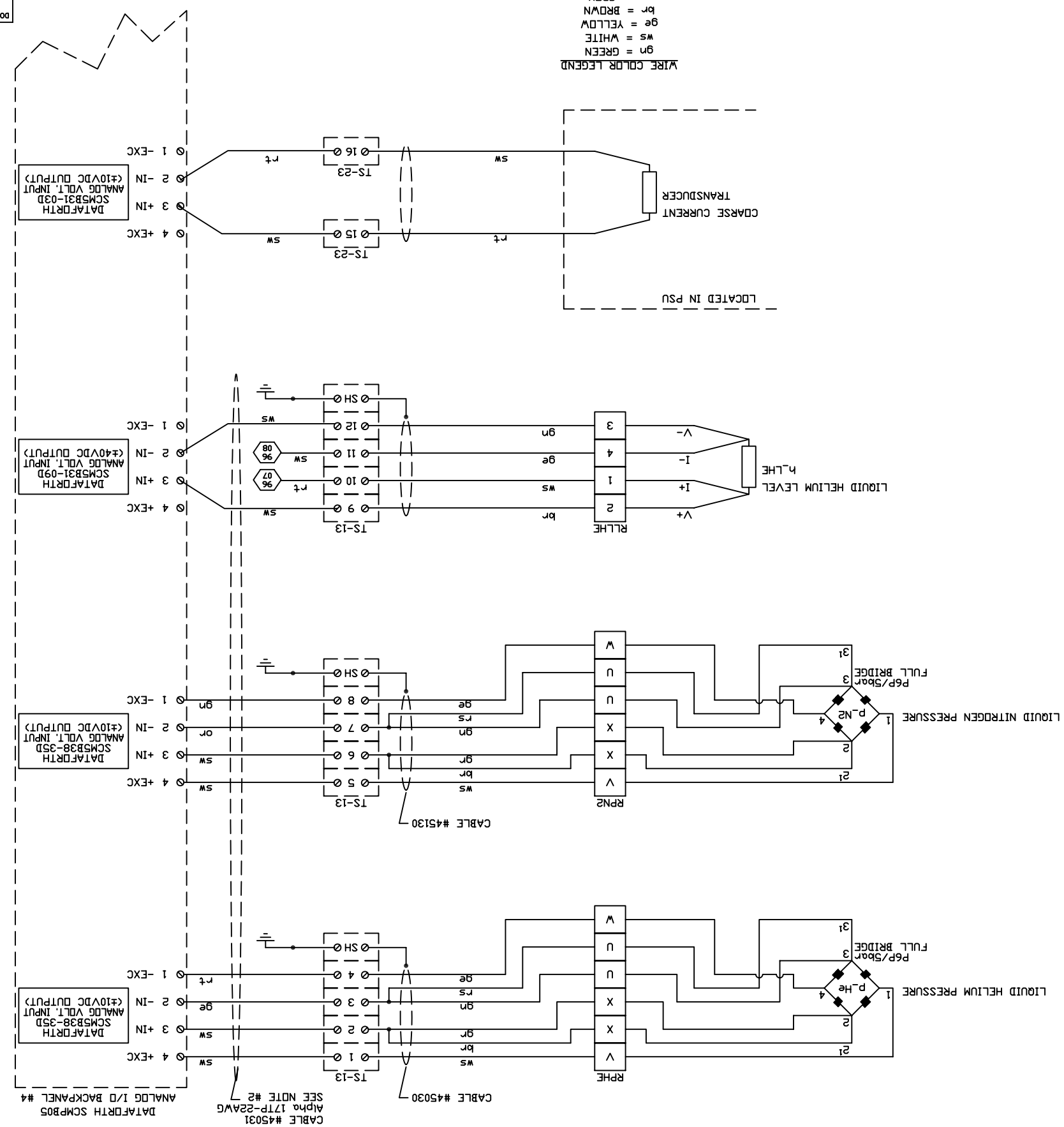

NOTES:
1. V+ AND V- OF NON-REDUNDANT SENSOR TO BE TWISTED PAIR #1
I+ AND I- OF NON-REDUNDANT SENSOR TO BE TWISTED PAIR #2
V+ AND V- OF REDUNDANT SENSOR TO BE TWISTED PAIR #3
I+ AND I- OF REDUNDANT SENSOR TO BE TWISTED PAIR #4
2. +EXC AND -EXC TO BE TWISTED PAIR #1
+IN AND -IN TO BE TWISTED PAIR #2

DOCUMENT CONTROL STAMP	DIM & TOL PER ASME Y14.5. UNLESS OTHERWISE SPECIFIED DIMENSIONS ARE IN INCHES TOLERANCES ARE: FRACTIONS ±1/8 DECIMAL .X ±.1 .XX ±.01 .XXX ±.005 ANGLES ±.50'	THIRD ANGLE PROJECTION	DO NOT SCALE DRAWING
	MATERIAL X		FINISH MACHINED SURFACES DEBURR & BREAK ALL SHARP EDGES UNLESS OTHERWISE NOTED XXX ✓

TRACKING NO. N/A	APPROVALS	DATE	DRAWN YOUR NAME	DOMMMY	X
			CHECKED X		X
			APPROVED X		X
			APPROVED X		X

Jefferson Lab
Thomas Jefferson National Accelerator Facility
NEWPORT NEWS, VIRGINIA
UNITED STATES DEPARTMENT OF ENERGY

T. JEFFERSON LABS
HMS DIPPLE MAGNET
LIQUID He & N2 PRESSURE/LEVEL
WIRE DIAGRAM

SIZE	DWG. NO.	REV.
D	67184-D-0045	—

SCALE X:X | USED ON ASSY NO. XXXXX-X-XXXX | SHEET 1 OF 1

ZONE	REV	DESCRIPTION	DATE	APPROVED
REVISION HISTORY				