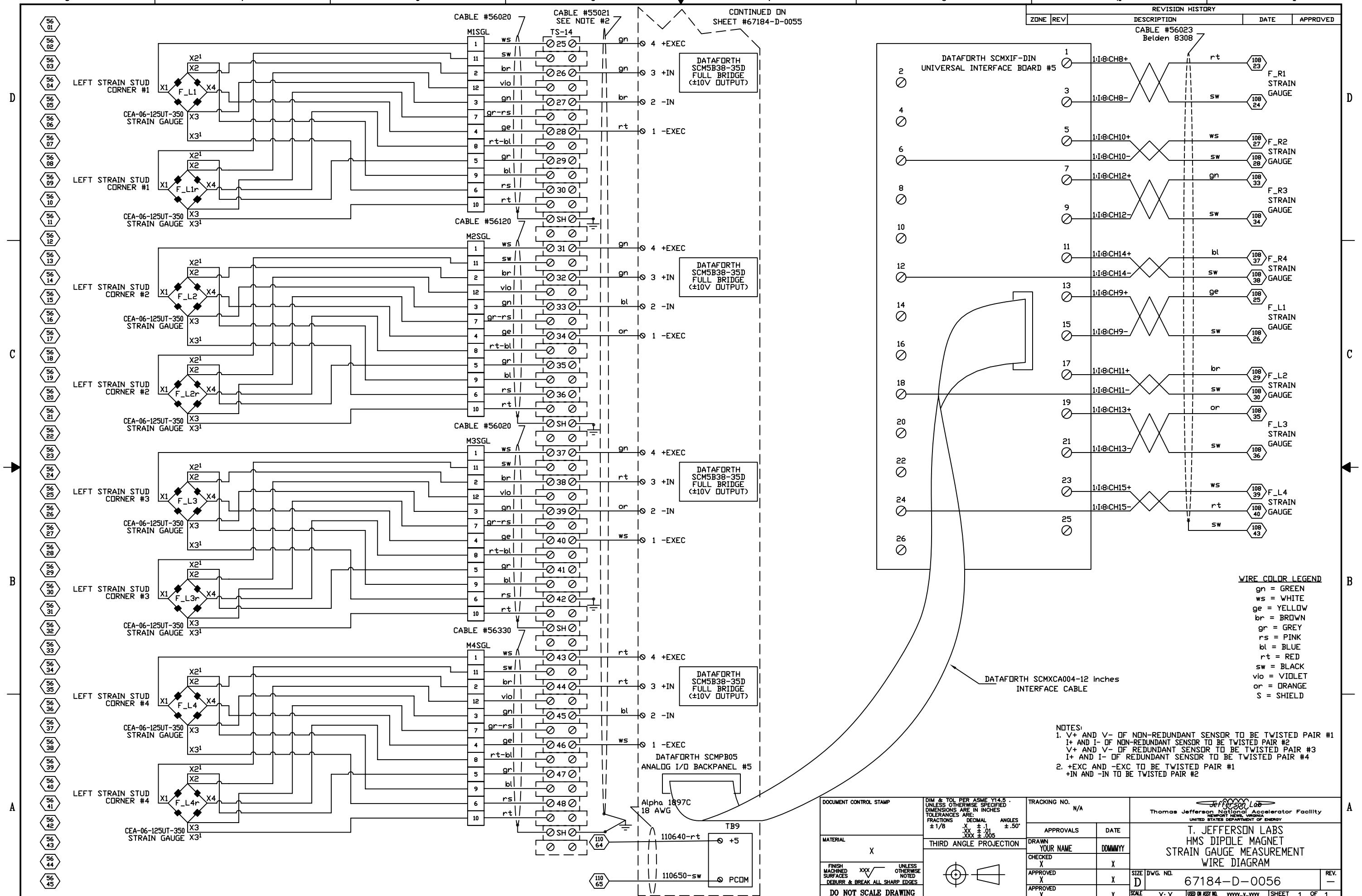
CABLE #56020
CABLE #55021
SEE NOTE #2
CONTINUED ON
SHEET #67184-D-0055
M1SGL
TS-14
LEFT STRAIN STUD
CORNER #1
F_L1
F_L1r
CEA-06-125UT-350
STRAIN GAUGE
DATAFORTH
SCM5B38-35D
FULL BRIDGE
(±10V OUTPUT)
4 +EXEC
3 +IN
2 -IN
1 -EXEC
CABLE #56120
M2SGL
LEFT STRAIN STUD
CORNER #2
F_L2
F_L2r
CABLE #56020
M3SGL
LEFT STRAIN STUD
CORNER #3
F_L3
F_L3r
CABLE #56330
M4SGL
LEFT STRAIN STUD
CORNER #4
F_L4
F_L4r
DATAFORTH SCMPB05
ANALOG I/O BACKPANEL #5
Alpha 1897C
18 AWG
TB9
110640-rt
110650-sw
+5
PCOM
DATAFORTH SCMXIF-DIN
UNIVERSAL INTERFACE BOARD #5
CABLE #56023
Belden 8308
F_R1 STRAIN GAUGE
F_R2 STRAIN GAUGE
F_R3 STRAIN GAUGE
F_R4 STRAIN GAUGE
F_L1 STRAIN GAUGE
F_L2 STRAIN GAUGE
F_L3 STRAIN GAUGE
F_L4 STRAIN GAUGE
DATAFORTH SCMXCA004-12 inches
INTERFACE CABLE
WIRE COLOR LEGEND
gn = GREEN
ws = WHITE
ge = YELLOW
br = BROWN
gr = GREY
rs = PINK
bl = BLUE
rt = RED
sw = BLACK
vio = VIOLET
or = ORANGE
S = SHIELD
NOTES:
1. V+ AND V- OF NON-REDUNDANT SENSOR TO BE TWISTED PAIR #1
I+ AND I- OF NON-REDUNDANT SENSOR TO BE TWISTED PAIR #2
V+ AND V- OF REDUNDANT SENSOR TO BE TWISTED PAIR #3
I+ AND I- OF REDUNDANT SENSOR TO BE TWISTED PAIR #4
2. +EXC AND -EXC TO BE TWISTED PAIR #1
+IN AND -IN TO BE TWISTED PAIR #2
REVISION HISTORY
ZONE REV DESCRIPTION DATE APPROVED
DOCUMENT CONTROL STAMP
MATERIAL X
FINISH MACHINED SURFACES XXX UNLESS OTHERWISE NOTED
DEBURR & BREAK ALL SHARP EDGES
DO NOT SCALE DRAWING
DIM & TOL PER ASME Y14.5 - UNLESS OTHERWISE SPECIFIED
DIMENSIONS ARE IN INCHES
TOLERANCES ARE:
FRACTIONS ±1/8 DECIMAL X ±.1 XX ±.01 XXX ±.005 ANGLES ±.50°
THIRD ANGLE PROJECTION
TRACKING NO. N/A
APPROVALS DATE
DRAWN YOUR NAME DDMMMYY
CHECKED X
APPROVED X
APPROVED X
Jefferson Lab
Thomas Jefferson National Accelerator Facility
NEWPORT NEWS, VIRGINIA
UNITED STATES DEPARTMENT OF ENERGY
T. JEFFERSON LABS
HMS DIPOLE MAGNET
STRAIN GAUGE MEASUREMENT
WIRE DIAGRAM
SIZE D DWG. NO. 67184-D-0056 REV. —
SCALE X:X USED ON ASSY NO. XXXXX-X-XXXX SHEET 1 OF 1
Me10