REVISION HISTORY				
ZONE	REV	DESCRIPTION	DATE	APPROVED

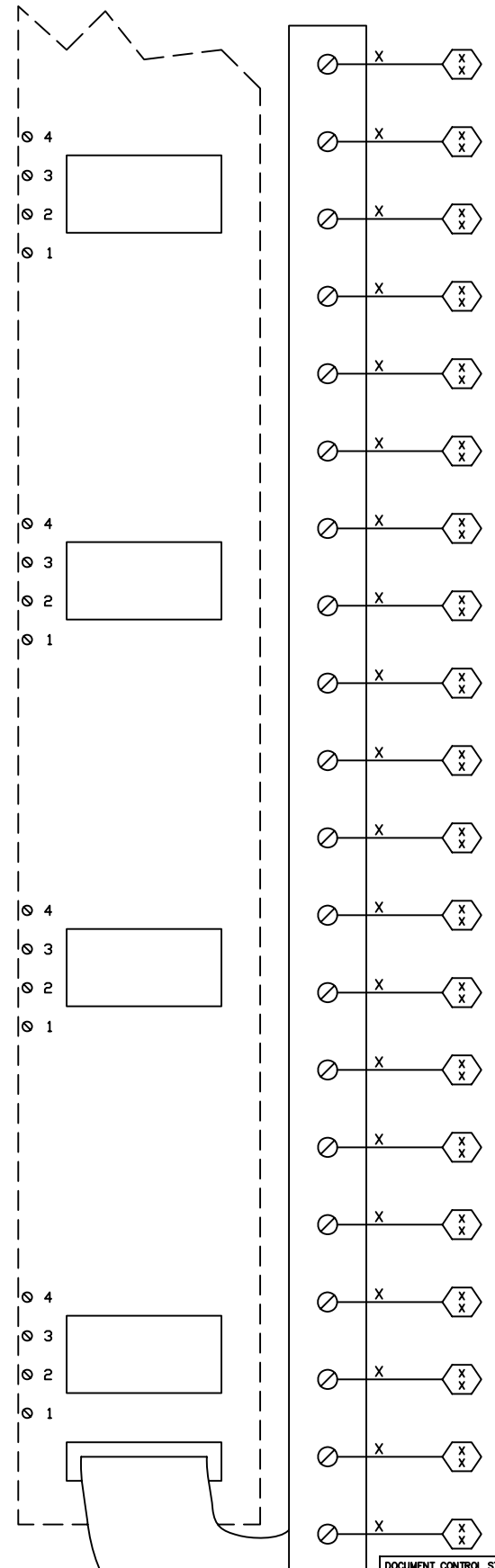

WIRE COLOR LEGEND
gn = GREEN
ws = WHITE
ge = YELLOW
br = BROWN
gr = GREY
rs = PINK
bl = BLUE
rt = RED
sw = BLACK
vio = VIOLET
or = ORANGE
S = SHIELD

DOCUMENT CONTROL STAMP	DIM & TOL PER ASME Y14.5 . UNLESS OTHERWISE SPECIFIED DIMENSIONS ARE IN INCHES TOLERANCES ARE: FRACTIONS ±1/8 DECIMAL .X ±.1 .XX ±.01 .XXX ±.005 ANGLES ±.50°	TRACKING NO. N/A	Jefferson Lab — Thomas Jefferson National Accelerator Facility, NEWPORT NEWS, VIRGINIA, UNITED STATES DEPARTMENT OF ENERGY
MATERIAL X	THIRD ANGLE PROJECTION	APPROVALS / DATE	T. JEFFERSON LABS HMS DIPOLE MAGNET LIQUID He & N2 LEVEL MEASUREMENT WIRE DIAGRAM
FINISH MACHINED SURFACES XXX UNLESS OTHERWISE NOTED DEBURR & BREAK ALL SHARP EDGES		DRAWN YOUR NAME — DDMMMYY	
DO NOT SCALE DRAWING		CHECKED X — X	SIZE D — DWG. NO. 67184-D-0071 — REV. —
		APPROVED X — X	
		APPROVED X — X	SCALE X:X — USED ON ASSY NO. XXXXX-X-XXXX — SHEET 1 OF 1

Me10