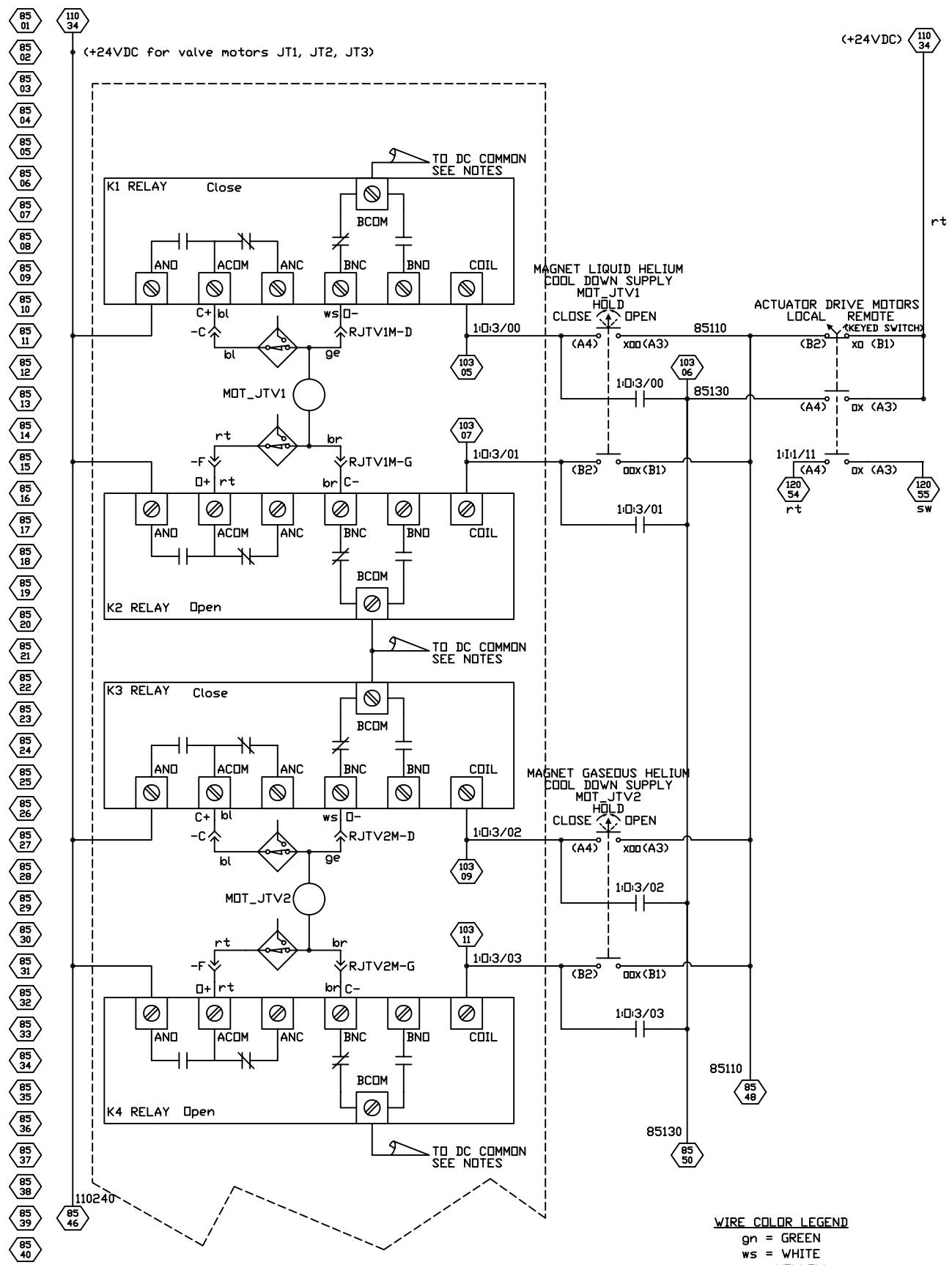

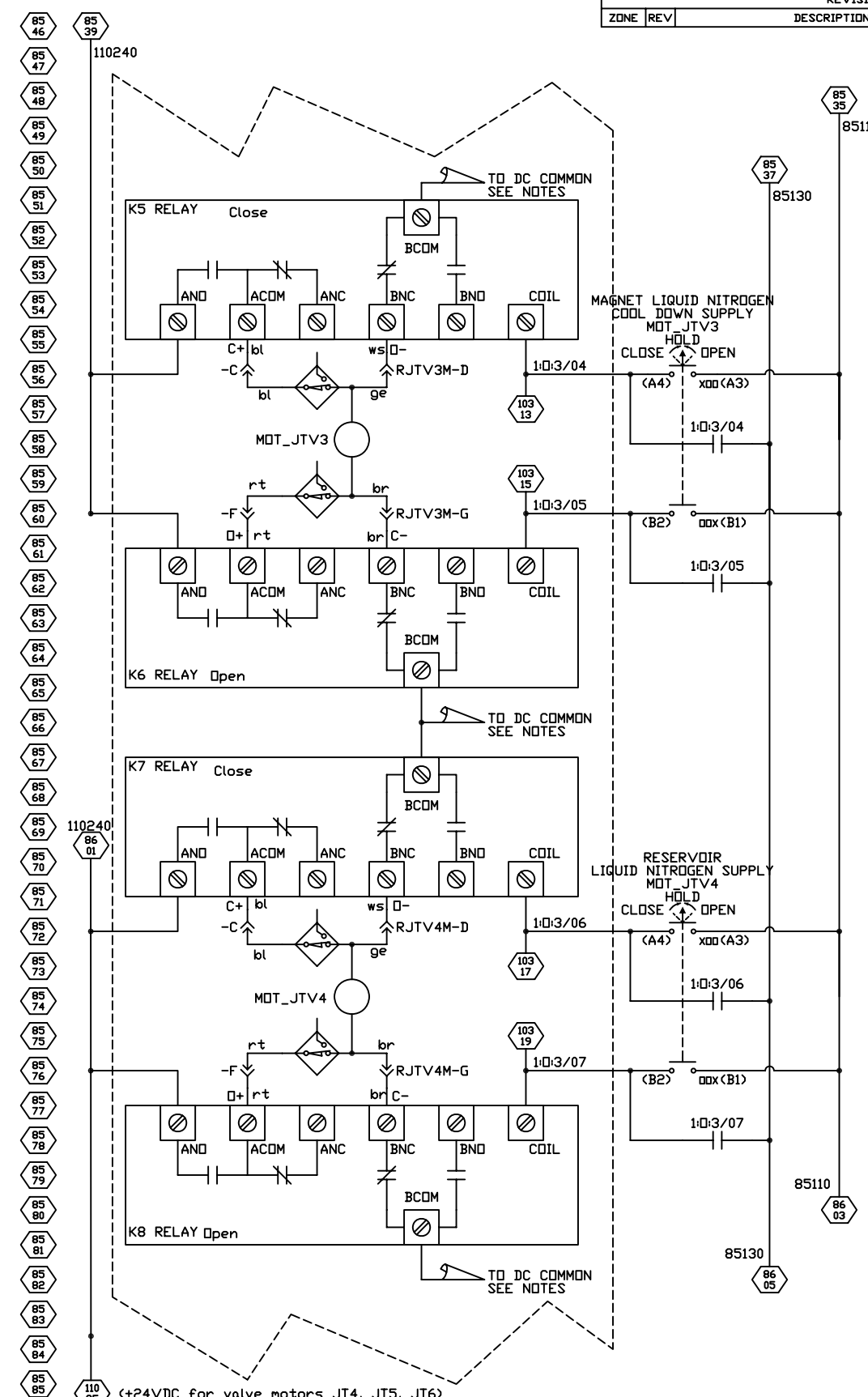

WIRE COLOR LEGEND

gn = GREEN
ws = WHITE
ge = YELLOW
br = BROWN
gr = GREY
rs = PINK
bl = BLUE
rt = RED
sw = BLACK
vio = VIOLET
or = ORANGE
S = SHIELD

NOTES:

1. ALL B RELAY COMM TERMINALS ARE INTERNALLY JUMPERED
2. ALL COIL COMM TERMINALS ARE INTERNALLY JUMPERED
3. INSTALL HARDWIRED JUMPER BETWEEN DC COMMON AND ALL B RELAY COMM TERMINALS AND ALL COIL COMM TERMINALS
4. REFERENCE DRAWING 67184-D-0120 FOR TERMINAL STRIP WIRING DIAGRAM

REVISION HISTORY

ZONE	REV	DESCRIPTION	DATE	APPROVED

DOCUMENT CONTROL STAMP

MATERIAL: X

FINISH MACHINED SURFACES XXX UNLESS OTHERWISE NOTED
DEBURR & BREAK ALL SHARP EDGES

DO NOT SCALE DRAWING

DIM & TOL PER ASME Y14.5. UNLESS OTHERWISE SPECIFIED DIMENSIONS ARE IN INCHES
TOLERANCES ARE:
FRACTIONS ±1/8 DECIMAL .X ±.1 .XX ±.01 .XXX ±.005 ANGLES ±.50°

THIRD ANGLE PROJECTION

TRACKING NO. N/A

APPROVALS	DATE
DRAWN YOUR NAME	DDMMMYY
CHECKED X	X
APPROVED X	X
APPROVED X	X

Jefferson Lab
Thomas Jefferson National Accelerator Facility
NEWPORT NEWS, VIRGINIA
UNITED STATES DEPARTMENT OF ENERGY

T. JEFFERSON LABS
HMS DIPOLE MAGNET
ELECTRIC LINEAR ACTUATOR DRIVE MOTORS
WIRE DIAGRAM

SIZE D | DWG. NO. 67184-D-0085 | REV. —
SCALE X:X | USED ON ASSY NO. XXXXX-X-XXXX | SHEET 1 OF 1

Me10