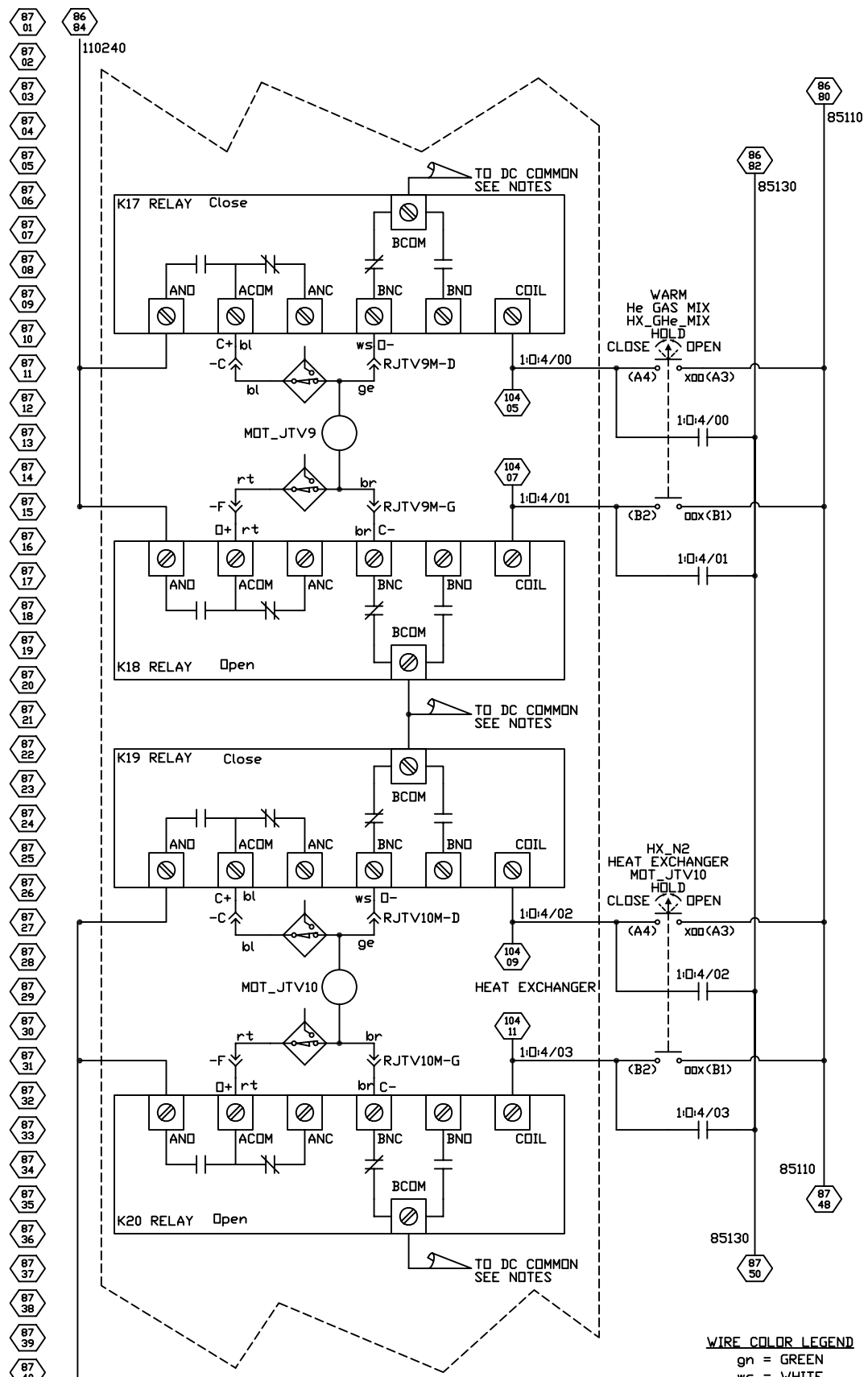

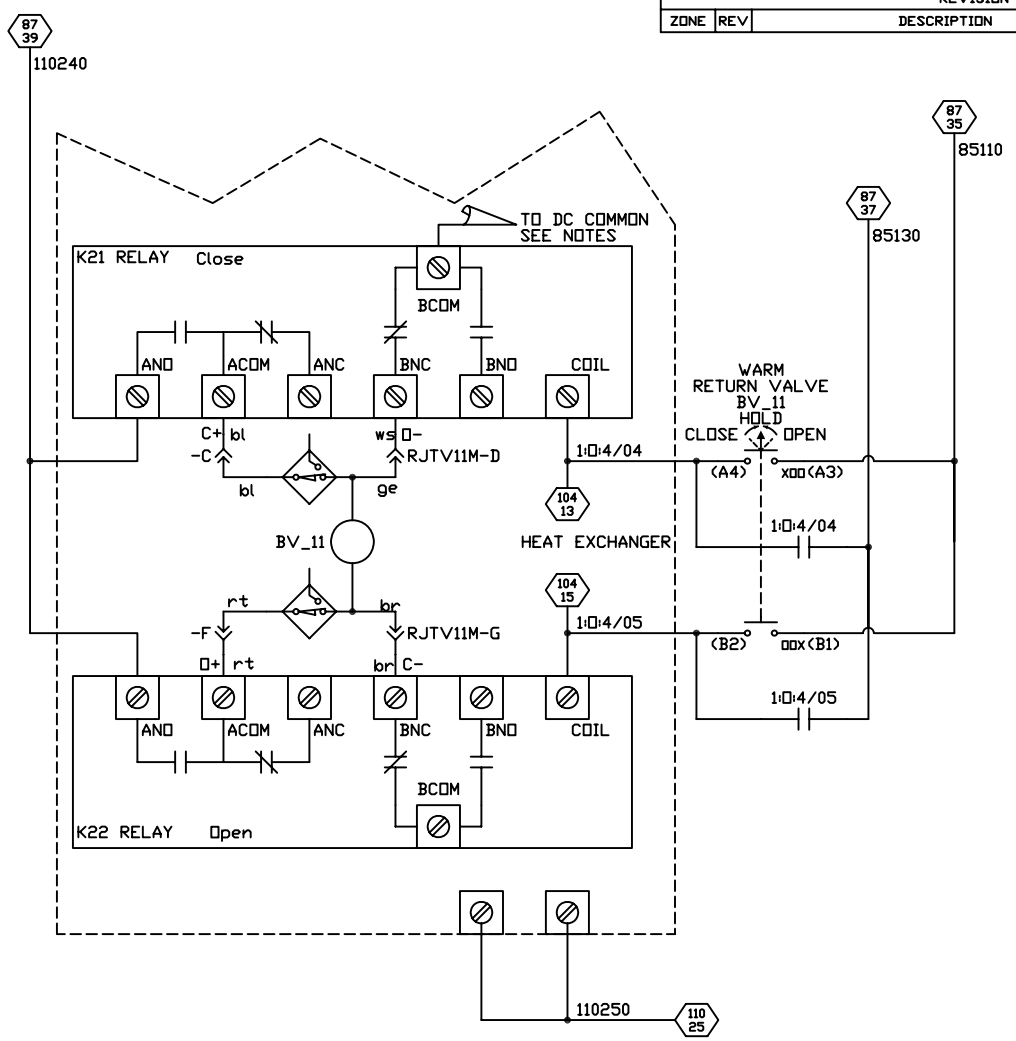

NOTES:
1. ALL B RELAY COMM TERMINALS ARE INTERNALLY JUMPERED
2. ALL COIL COMM TERMINALS ARE INTERNALLY JUMPERED
3. INSTALL HARDWIRED JUMPER BETWEEN DC COMMON AND ALL B RELAY COMM TERMINALS AND ALL COIL COMM TERMINALS

WIRE COLOR LEGEND

gn	GREEN
ws	WHITE
ge	YELLOW
br	BROWN
gr	GREY
rs	PINK
bl	BLUE
rt	RED
sw	BLACK
vio	VIOLET
or	ORANGE
S	SHIELD

REVISION HISTORY

ZONE	REV	DESCRIPTION	DATE	APPROVED

DOCUMENT CONTROL STAMP

MATERIAL: X

FINISH MACHINED SURFACES XXX UNLESS OTHERWISE NOTED
DEBURR & BREAK ALL SHARP EDGES

DO NOT SCALE DRAWING

DIM & TOL PER ASME Y14.5 . UNLESS OTHERWISE SPECIFIED DIMENSIONS ARE IN INCHES
TOLERANCES ARE:
FRACTIONS ±1/8 DECIMAL .X ±.1 .XX ±.01 .XXX ±.005 ANGLES ±.50°

THIRD ANGLE PROJECTION

TRACKING NO. N/A

APPROVALS	DATE
DRAWN YOUR NAME	DDMMMYY
CHECKED X	X
APPROVED X	X
APPROVED X	X

Jefferson Lab
Thomas Jefferson National Accelerator Facility
NEWPORT NEWS, VIRGINIA
UNITED STATES DEPARTMENT OF ENERGY

T. JEFFERSON LABS
HMS DIPOLE MAGNET
ELECTRIC LINEAR ACTUATOR DRIVE MOTORS
WIRE DIAGRAM

SIZE D | DWG. NO. 67184-D-0087 | REV. —
SCALE X:X | USED ON ASSY NO. XXXXX-X-XXXX | SHEET 1 OF 1

Me10