REV	DESCRIPTION	CHGD	DATE
0	ORIGINAL RELEASE	-	-
A	DWG # WAS 15601-D	KUK	7/11/00

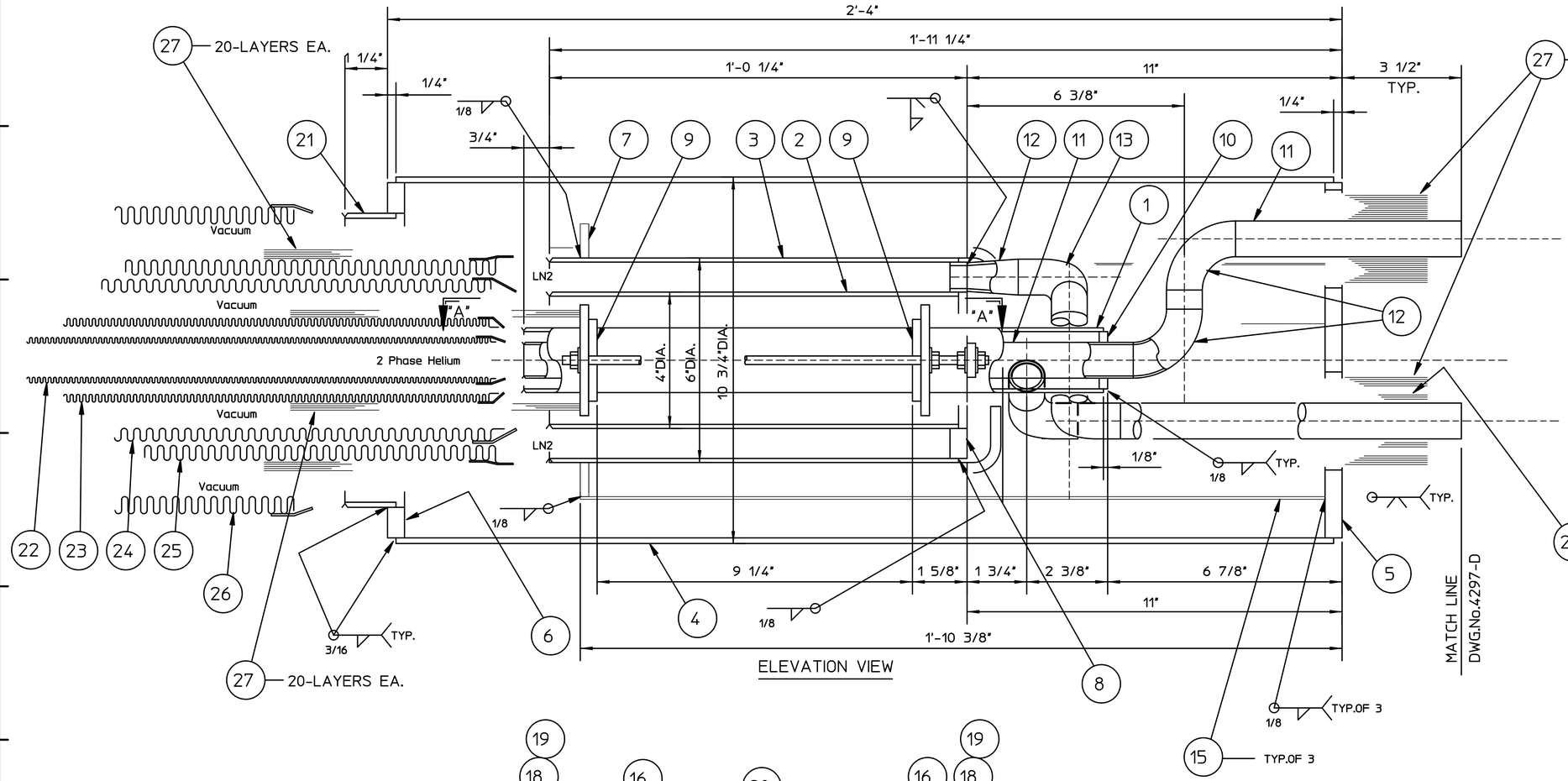

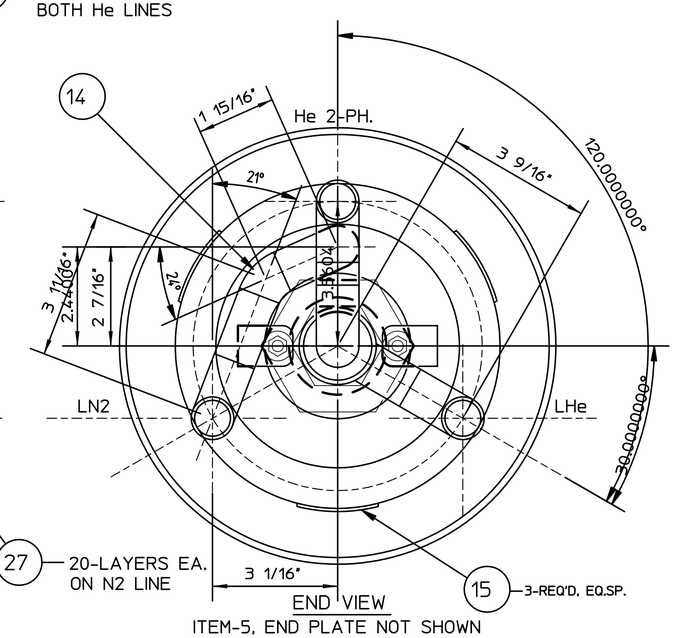

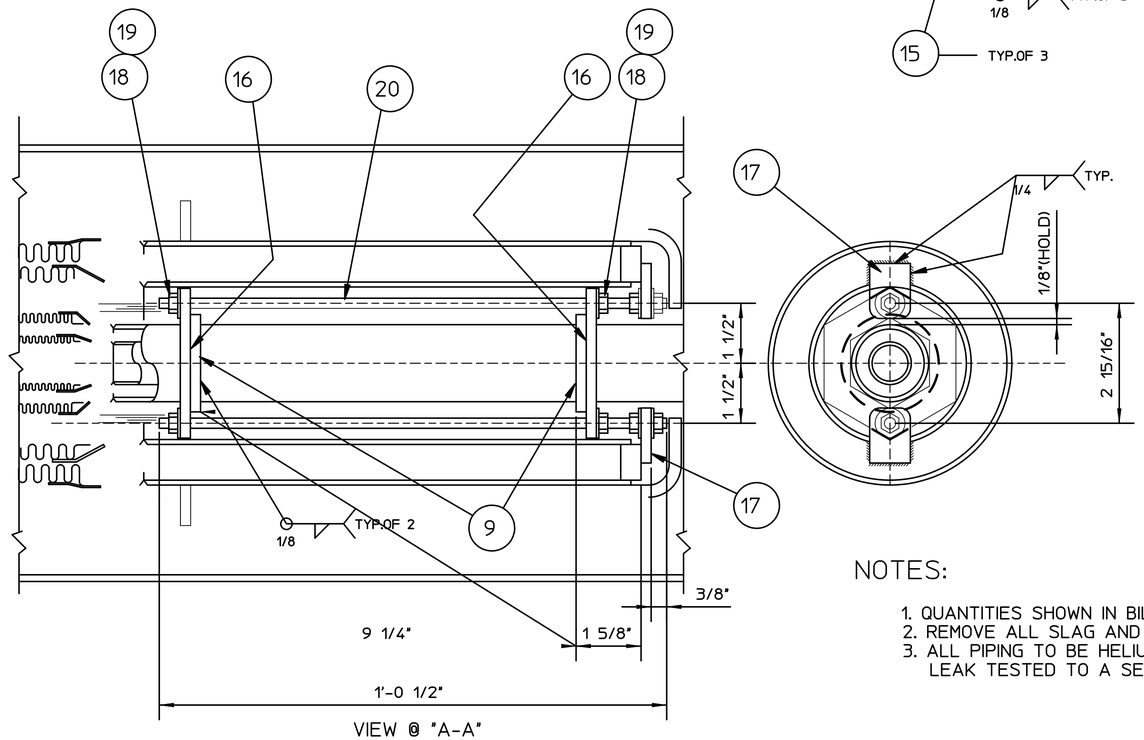

NOTES:

1. QUANTITIES SHOWN IN BILL OF MATERIAL ARE FOR (2) END BOXES.
2. REMOVE ALL SLAG AND WELD SPATTER.
3. ALL PIPING TO BE HELIUM MASS-SPECTROMETER LEAK TESTED TO A SENSITIVITY OF 2×10^{9} STD. CC/SEC.

	ITEM	DESCRIPTION		QUAN.
	27	SUPERINSULATION, ALUM. MYLAR & POLYESTER PAPER		A/R
	26	FLEX HOSE,"FLEXWELD" TYPE FWSS-30 8"I.D.x9"O.D.x36'-0"L.G.		1
	25	FLEX HOSE,"MICROFLEX" TYPE MSS-300 5"I.D.x5.88"O.D.x37'-0"L.G.		1
	24	FLEX HOSE,"MICROFLEX" TYPE MSS-300 4"I.D.x4.74"O.D.x37'-0"L.G.		1
	23	"SENIOR FLEXONICS" TYPE FUBX 2"I.D.x2.45"O.D.x36'-11 1/4"L.G.		1
	22	"SENIOR FLEXONICS" TYPE UFBX 1"I.D.x1.33"O.D.x36'-11 1/4"L.G.		1
	21	PIPE, 8" IPS, SCH-10S (.148") x 1 1/2"L.G.,	A-312, TP-304	2
	20	ROD THREADED, 1/4"-20UNC x 12 1/2"L.G.	ST.STL. 304	4
	19	NUT HEX HD, 1/4"-20UNC	ST.STL. 304	8
	18	WASHER FLAT, 1/4"NOM.	ST.STL. 304	8
	17	DETAIL ITEM-8,	DWG.# 15601-D	4
	16	DETAIL ITEM-7,	DWG.# 15601-D	4
	15	SHEET, 14GA. (.075") x 2" x 21 7/8"L.G.	A-240, 304	6
	14	ELL, 3/4" SCH-10S, 45° L.R., B.W.	A-403, 304	2
	13	ELL, 3/4" SCH-10S, 90° L.R., B.W.	A-403, 304	10
	12	REDUCER, CONC.,3/4"x1/2" SCH-10S	A-403, 304	2
	11	PIPE, 3/4" IPS, SCH-10S CUT TO SUIT	A-312, TP-304	9FT.
A	10	DETAIL ITEM-6,	DWG.# 4298-D-1	2
A	9	DETAIL ITEM-5,	DWG.# 4298-D-1	4
A	8	DETAIL ITEM-4,	DWG.# 4298-D-1	2
A	7	DETAIL ITEM-3,	DWG.# 4298-D-1	2
A	6	DETAIL ITEM-2,	DWG.# 4298-D-1	2
A	5	DETAIL ITEM-1,	DWG.# 4298-D-1	2
	4	PIPE, 10" IPS, SCH-10S (.165") x 27 1/2"L.G.,	A-312, TP-304	2
	3	TUBE, 6" O.D. x .120"WL. x 12"L.G.,	A-213, TP-304	2
	2	PIPE, 3 1/2" IPS, SCH-10S (.120") x 12"L.G.,	A-312, TP-304	2
	1	PIPE, 1 1/2" IPS, SCH-10S (.109") x 17"L.G.,	A-312, TP-304	2

BILL OF MATERIAL

DATE PRINTED : 6/30/00

UNLESS OTHERWISE SPECIFIED		DESIGNED BY:		
FRACTIONS ±	1/32"	DRAWN BY:	R.S.B.	6/29/00
.X ±	.020"	CHECKED BY:		
.XX ±	.010"	APPROVED BY:		
.XXX ±	.005"	JOB NUMBER	6806	MATERIAL -
ANGLES ±	2°			

ABILITY ENGINEERING TECHNOLOGY

DRAWING NAME: TRANSFER LINE, END CAN

CUSTOMER: TJNT

USED ON

SHEET 1 OF 1

SCALE: 1" = 2"

DRAWING NUMBER: 4298-D

REV. A