REVISIONS			
REV.	DESCRIPTION	DATE	APPROVED
2	REVISED PER CUSTOMER REQUESTS	RTHAAS 11/18/09	GJL 11/18/09

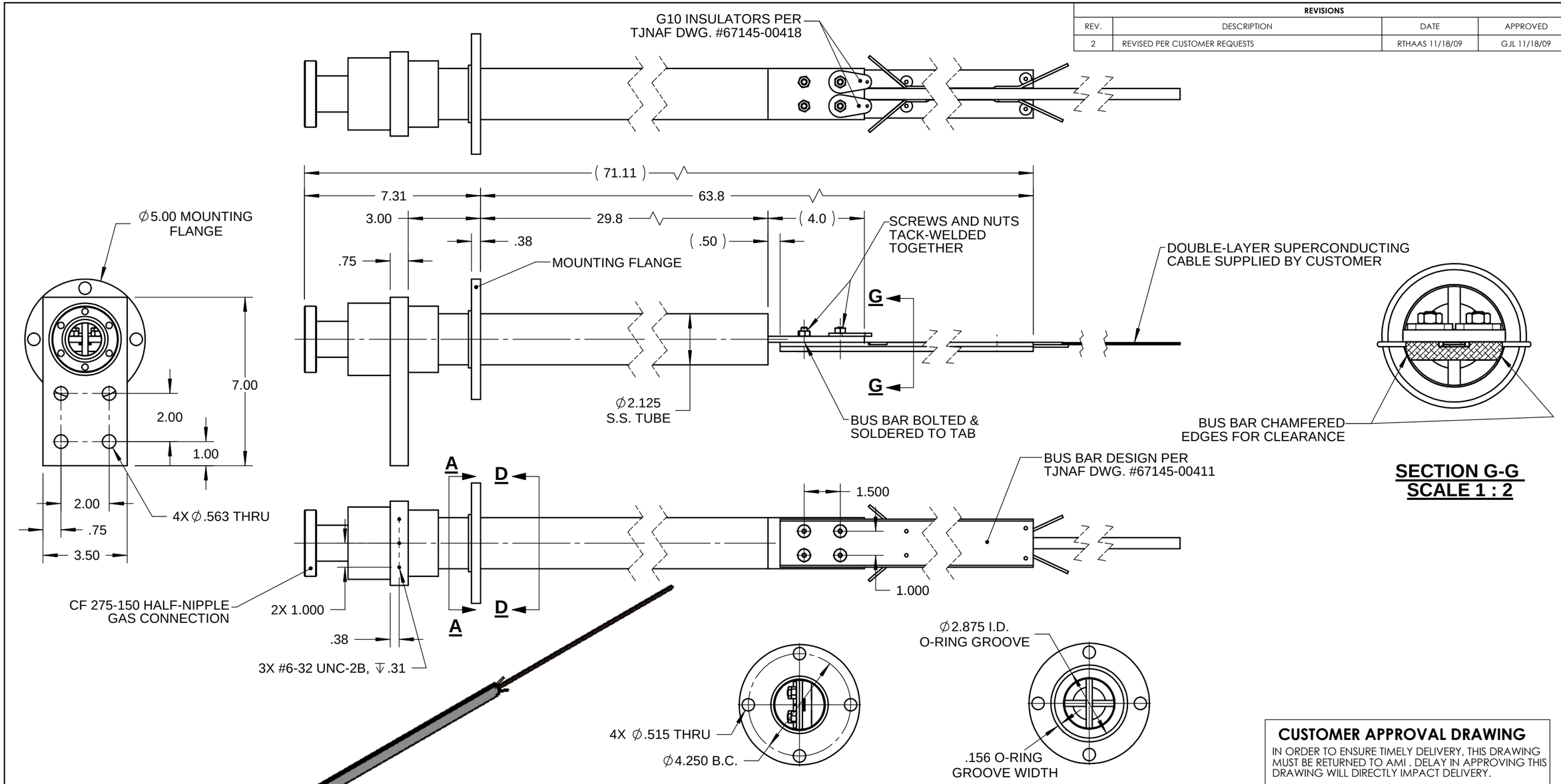

SECTION G-G
SCALE 1 : 2

SECTION A-A

SECTION D-D

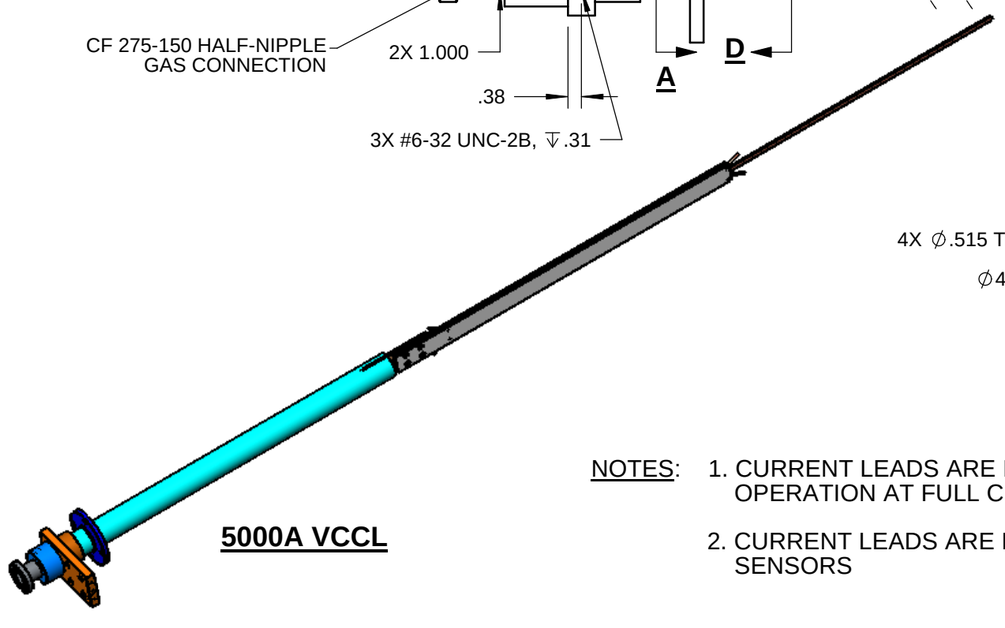

5000A VCCL

NOTES:
1. CURRENT LEADS ARE DESIGNED FOR 150 SECOND OPERATION AT FULL CURRENT WITH NO COOLING FLOW.
2. CURRENT LEADS ARE NOT FITTED WITH TEMPERATURE SENSORS

CUSTOMER APPROVAL DRAWING

IN ORDER TO ENSURE TIMELY DELIVERY, THIS DRAWING MUST BE RETURNED TO AMI . DELAY IN APPROVING THIS DRAWING WILL DIRECTLY IMPACT DELIVERY.

Signature Date

UNLESS OTHERWISE SPECIFIED DIMENSIONS ARE IN INCHES
TOLERANCES - UNLESS OTHERWISE NOTED:

THIRD ANGLE PROJECTION

ASSEMBLY		MACHINED	
X.X	± 0.1	X.X	± 0.03
X.XX	± 0.05	X.XX	± 0.01
ANGLES	± 1.0°	X.XXX	± 0.005
FRACTIONS	± 1/8	ANGLES	± 0.5°
		FINISH	63/

REMOVE ALL SHARP EDGES & BURRS

SIGNATURES / DATES
DRAWN: GJL 1/31/11
ENG/CHK: GJL 1/31/11
APPROVED: GJL 1/31/11
APPROVED:

AMERICAN MAGNETICS INC.

TJNAF
5000 AMP
VCCLS WITH BUS BARS

SERIAL NO.

PROPRIETARY INFORMATION
THE INFORMATION CONTAINED IN THIS DRAWING IS THE SOLE PROPERTY OF AMERICAN MAGNETICS, INC., OAK RIDGE, TN., 37830. ANY REPRODUCTION IN PART OR WHOLE WITHOUT THEWRITTEN PERMISSION OF AMERICAN MAGNETICS, INC. IS STRICTLY PROHIBITED.

SIZE B | DWG NO. QV18171-1-99 | REV. 0
SCALE 1:4 | NEXT ASM | SHEET 1 OF 1

FOLDER COPY