TECHNICAL INFORMATION

(PARTS LIST, SCHEMATICS)

PART NUMBER	DESCRIPTION REMARK	QTY PER
190662560	RESISTOR NETWORK 56 OHMS RN26-RN97	72
205910256	IC 256K SERIAL PROM 17256 U61 DO NOT INCLUDE ON KIT. SEND TO THE PROGRAMMING CENTER FOR PROGRAMMING.	1
205917128	IC 16K SERIAL PROM 17128 U56 DO NOT INCLUDE ON KIT. SEND TO THE PROGRAMMING CENTER FOR PROGRAMMING.	1
229020055	TRANS VOLT SUPPR P6KE6.8 CR4 CR5	2
229020145	TRANS VOLT SUPPR P6KE18 CR2 CR3	2
256432212	DIODE LED (YEL) TIL212-1 CR49	1
256532232	DIODE LED (GRN) TIL232-1 CR1 CR50 CR51	3
300050001	CHOKE FERRITE SINGLE LEAD L4 L5 L8-L10	5
309040080	CRYSTAL OSCILLATOR 80 MHZ XTAL1	1
309090250	CRYSTAL OSCILLATOR 250MHZ XTAL2	1
400311008	SOCKET IC SOLD TAIL DIP-8 U61 U56	2
403119234	HDR DBL ROW RT ANGL 34 J19-J24	6
403181002	HDR SINGL ROW STRAIGHT 2 J1-J3, J7-J18	15
403181003	HDR SINGL ROW 3 JBIP JROCLK	2
405812002	SOCKET STRIP SOLDR 20 POS RN26-RN97	24
433220001	FUSE PICO II 125V 10 AMP F3 F4	2
433220003	FUSE PICO II 125V .5 AMP F1 F2	2
433221007	FUSE PICO II 125V 7 AMP F5	1
454311006	HDR SOLD TAIL/WW 6 J26-J28	3
454370002	SHUNT 2 POS	8
454713004	HDR SOLD TAIL/MALE 4 J25	2
454720130	HDR SOLD TAIL/FEM 130 P2	1
468099008	TEST POINT W/GLASS INSULATOR	15

PART NUMBER	DESCRIPTION REMARK	QTY PER
468099008	TEST POINT W/GLASS INSULATOR TP1 TP4 TP7 TP8 TP14 TP16 TP20 TP24 TP25 TP27-TP32	15
524440020	STANDOFF SWAGED 4-40X.360	2
540303002	SIDE COVER FASTBUS (LEFT)	1
540305001	MOUNTING BLOCK FASTBUS #1	1
540307030	STIFFENER FOR 1876 FASTBUS	2
555083374	THUMB NUT(CUSTOM).374 DIA	2
559440004	SCREW 4-40 SLOTTED 1/4"	21
560440012	SCREW PHILIPS 4-40X3/4	2
567440004	SCREW FLAT PHIL 4-40X1/4	1
568440004	SCREW FLAT PHIL 4-40X1/4	10
597000100	SHIPPING CARTON (FASTBUS PAD)	1
701876002	STIFFENER FOR 1876	1
701877S00	FRONT PANEL 1877S	1
711877S00	PC BOARD PREASS'Y 1877S	1
MTD133B	IC MULTIHIT TDC MTD133B U122 U123 U125 U126 U128 U129 U133 U134 U136 U137 U139 U140 DO NOT SEND LOOSE. THIS DEVICE MUST BE HANDLED WITH CARE AND KEPT IN ITS PROTECTIVE PACKAGE.	12
SM190242471	RES NETWORK 470 OHMS RN110-RN125	16
SM190342221	RES NETWORK 220 OHMS RN10	1
SM190342560	RES NETWORK 56 OHMS RN98	1
SM190361222	RES NETWORK 2.2K RN1 RN6	2
SM190362101	RES NETWORK 2% 100 OHMS RN2 RN8 RN9 RN12 RN13 RN99 RN126-RN141	22
SM190362103	RES NETWORK 10 K RN3 RN4 RN7 RN11	4
SM200160101	IC OR-NOR GATE 10H101 U118	1
SM200160350	LOW POWER HEX D-LATCH	16
SM200167104	IC 2-IN AND GATE 10H104 U71 U108	2
SM200167131	IC M-S TYP D FLOP 10H131 U1 U117	2
SM200170020	IC QUAD OR GATE 74F02D U58	1
SM200172000	IC 2-INPUT NAND 74F00 U24	1
SM200172008	IC AND GATE 74F08	1

PART NUMBER	DESCRIPTION REMARK	QTY PER
SM200172008	IC AND GATE 74F08 U65	1
SM200172074	IC D-TYP FLOP 74F74 U16, U68	2
SM200178008	IC 2-INPUT AND HCT08 U8 U26	2
SM200267136	IC HEX COUNTER 10H136 U9	1
SM200272161	IC 4-BIT SYNCHR COUNTER 74F161 U4 U7 U12 U19 U20	5
SM200274221	IC MONOST MULTIVIBR LS221 U141 U142	2
SM200276020	IC 14-STAGE RIPPLE COUNTER 74HC4020 U5	1
SM200278040	IC COUNTER HCT4040 U6	1
SM200471843	IC 9-BIT BUS INT LATCH 74F843 U79 U81 U87 U90 U97 U102 U112	7
SM201177377	IC OCTAL FLIP FLOP 74F377 U46 U48 U50 U52	4
SM204042015	IC LINE RECEIVER 10114 U145-U148 U151 U152 U155-U158 U161 U162 U165-U168 U171 U172 U175-U178 U181 U182 U185-U188 U191 U192 U195-U198 U201 U202 U204 U205	38
SM205229256	IC 32KX8 STATIC RAM U29 U31 U33 U35	4
SM205316008	LOGIC CELL ARRAY U66 DO NOT SEND LOOSE. THIS DEVICE MUST BE HANDLED WITH CARE AND KEPT IN ITS PROTECTIVE PACKAGE.	1
SM205620574	IC FAST CMOS OCTAL D 74FCT574 U80 U88 U103 U113	4
SM205700005	IC LOGIC CELL ARRAY 4005 U228 DO NOT SEND LOOSE. THIS DEVICE MUST BE HANDLED WITH CARE AND KEPT IN ITS PROTECTIVE PACKAGE.	1
SM205720016	IC PAL 16L8D DO NOT INCLUDE ON KIT. SEND TO THE PROGRAMMING CENTER	1

PART NUMBER	DESCRIPTION REMARK	QTY PER
SM205720016	IC PAL 16L8D FOR PROGRAMMING. U36	1
SM205721166	IC PAL 16R6 U208 THIS PART MUST BE PREPROGRAMMED AND SENT WITH THE KIT.	1
SM205728020	IC PAL 20L8 DO NOT INCLUDE IN KIT. SEND TO THE PROGRAMMING CENTER FOR PROGRAMMING. U13 U14	2
SM205728210	IC PALC22V10-25 DO NOT INCLUDE ON KIT. SEND TO THE PROGRAMMING CENTER FOR PROGRAMMING. U10 U11 U15	3
SM206367605	IC HEX ECL TO TTL REGISTER U45 U54 U55 U62 U227	5
SM206670574	IC 8-BIT REGISTER 74FCT2574 U21 U22 U23	3
SM207160111	IC CLOCK DRIVER 10E111 U121 U132	2
SM207170541	IC BUFFER/LINE DRIVER FCT2541 U37 U39 U41 U43 U47 U49 U51 U53 U76 U84	10
SM207178244	IC LINE DRIVER F244 U3 U82 U89 U96 U104 U105 U114-U116	9
SM207179244	IC BUFFER/LINE DRIV HCT244 U91 U92 U98 U99 U106	5
SM207285541	IC OCTAL ECL-TO-TTL TRANSLATOR U70 U73 U74 U77 U85 U100 U110	7
SM207360124	IC TRANSLATOR MC10124 U25 U27 U107 U210	4
SM207360125	IC TRANSLATOR MC10125 U69 U93	2
SM207367125	IC TRANSLATOR 10H125 U2 U109	2
SM207385543	IC OCTAL TTL TO ECL TRANSLATOR U67 U95	2
SM207385578	IC OCTAL TTL TO ECL TRANSLATOR U78 U86 U101 U111	4
SM207461116	IC ECL QUINT DIFF LINE REC 10E116 U17 U119	2
SM207960158	IC 2-IN MPX 10H158 U94	1
SM208271696	IC MICRO P SUPRVSR ADM696	1

PART NUMBER	DESCRIPTION REMARK	QTY PER
SM208271696	IC MICRO P SUPRVSR ADM696 U72	1
SM208470353	IC DUAL OP AMP LF353 U18 U120 U124 U127 U130 U131 U135 U138 U203	9
SM236030099	DIODE SO-PKG BAV99 CR37-CR48	12
SM240215231	DIODE 5.1V ZENER CR7-CR10 CR12-CR15 CR17-CR36 CR53	29
SM253032810	DIODE SCHOTTKY 2810 CR6 CR11 CR16 CR52	4
SM300095151	INDUCTOR WOUND 150NH L1-L3	3
SM300095271	INDUCTOR WOUND 270 NH L6 L7	2
SM400100020	SOCKET SMT TO SMT 20-PIN U36	1
SM400100028	SOCKET SMT TO SMT 28-PIN U10 U11 U13 U14 U15	5
SM400100068	SOCKET SMT TO SMT 68-PIN U122 U123 U125 U126 U128 U129 U133 U134 U136 U137 U139 U140	12
SM653181256	RES THICK FILM 1% 37.4 OHMS R240-R246	7
SM653181268	RES THICK FILM 1% 49.9 OHMS R1 R34-R36 R199 R213 R214	7
SM653181281	RES THICK FILM 1% 68.1 OHMS R2 R4-9 R15 R18 R93 R94 R101 R102 R116 R117 R119 R120 R126 R127 R129 R130 R142 R143 R146 R147 R152 R153 R167 R168 R170 R171 R179 R180 R182 R183 R189 R190	37
SM653181293	RES THICK FILM 1% 90.9 OHMS R518-R709	192
SM653181297	RES THICK FILM 1% 100 OHMS R3 R10 R19 R20 R95 R96 R131 R132 R172 R173 R192-R198 R200 R202-R212 R215 R250 R322 R323	33
SM653181314	RES THICK FILM 1% 150 OHMS R21 R23 R30 R31 R516	5
SM653181330	RES THICK FILM 1% 221 OHMS R22 R24 R25 R29	8

PART NUMBER	DESCRIPTION REMARK	QTY PER
SM653181330	RES THICK FILM 1% 221 OHMS R219 R220 R249 R517	8
SM653181338	RES THICK FILM 1% 267 OHMS R11 R103-R114 R154-R165 R227 R228 R231-R234	31
SM653181393	RES THICK FILM 1% 1.00 K R16 R17 R32 R98 R99 R122 R123 R134 R135 R148 R151 R175 R176 R185 R186 R248 R304	17
SM653181422	RES THICK FILM 1% 2.00 K R14 R33 R140 R216 R222 R225 R321	7
SM653181443	RES THICK FILM 1% 3.32 K R12 R37-R40 R45-R48 R53-R56 R61-R64 R69-R72 R77-R80 R85-R88 R230 R223	31
SM653181458	RES THICK FILM 1% 4.75 K R97 R100 R121 R124 R133 R136 R141 R149 R150 R174 R177 R184 R187 R224	14
SM653181481	RES THICK FILM 1% 8.25 K R221	1
SM653181489	RES THICK FILM 1% 10.0 K R145 R238 R239 R247 R306-R317 R320	17
SM653181518	RES THICK FILM 1% 20.0 K R13 R41-R44 R49-R52 R57-R60 R65- R68 R73-R76 R81-R84 R89-R92 R137 R138 R226 R229	33
SM653181614	RES THICK FILM 1% 200 K R217 R218	2
SM661207102	CAP CERA CHIP 20% .001 UF C31 C135-C137 C150 C151 C155-C157 C547 C558-C610 C622 C676-C691	80
SM661207103	CAP CERA CHIP 20% .01 UF C6 C206-C217 C280-C291 C342 C439 C441 C442 C444 C448-C543	126
SM661207104	CAP CERA CHIP 20% .1 UF C1-C5 C7-C23 C25 C26 C28 C29 C30	395

PART NUMBER	DESCRIPTION REMARK	QTY PER
SM661207104	CAP CERA CHIP 20% .1 UF C32-C40 C46-C94 C96 C98 C99 C100 C103 C106-C122 C124-C134 C138-C149 C152-C154 C158-C197 C199 C201-C205 C219 C220 C223-C231 C234 C235 C238 C239 C241-C243 C245-C251 C254-C265 C267-C270 C272 C274-C279 C293-C295 C297-C302 C305-C313 C315-C323 C326-C328 C330 C332-C341 C343-C348 C351 C353 C355 C357-C361 C363 C365-C368 C371-C375 C383 C385-C388 C379-C381 C385-C388 C390 C392-C394 C396 C398-C401 C404 C406-C408 C410 C412-C416 C418 C420-C422 C426-C429 C432 C434-C438 C440 C443 C445-C447 C550 C551 C545 C553-C557 C611 C620 C621 C623-C626 C630 C631 C636 C637 C642 C643 C648-C675 C692-C697 C750	395
SM661255056	CAP CERA CHIP 5.6 PF C27 C198 C200 C232 C233 C252 C253 C271 C273 C303 C304 C324 C325 C24	14
SM661255220	CAP CERA CHIP 5% 22 PF C41-C45 C544	6
SM661255390	CAP CERA CHIP 5% 39 PF C101 C102 C104 C105 C349	5
SM661506684	CAP CERA CHIP 10% .68 UF C350 C352	2

End of report. 351 Details encountered.

1 1877s sheet1
2 1877s/fastbus sheet1
3 1877s/fastbus/addr_latch sheet1
4 1877s/fastbus/bus_register sheet1
5 1877s/fastbus/coupler_xi sheet1
6 1877s/fastbus/csr_1_18 sheet1
7 1877s/fastbus/fastbus sheet1
8 1877s/fastbus/fastbus sheet2
9 1877s/fastbus/fastbus sheet3
10 1877s/fastbus/fastbus sheet4
11 1877s/fastbus/pipeline sheet1
12 1877s/fastbus/rcvr_xmtr sheet1
13 1877s/front_end sheet1
14 1877s/front_end sheet2
15 1877s/front_end sheet3
16 1877s/front_end sheet4
17 1877s/front_end sheet5
18 1877s/front_end sheet6
19 1877s/front_end sheet7
20 1877s/front_end sheet8
21 1877s/front_end/fe_int_0 sheet1
22 1877s/front_end/fe_int_1 sheet1
23 1877s/front_end/fe_int_2 sheet1
24 1877s/front_end/fe_int_3 sheet1
25 1877s/front_end/fe_int_4 sheet1
26 1877s/front_end/fe_int_5 sheet1
27 1877s/front_end/fe_int_6 sheet1
28 1877s/front_end/fe_int_7 sheet1
29 1877s/front_end/fe_int_8 sheet1
30 1877s/front_end/fe_int_9 sheet1
31 1877s/front_end/fe_int_10 sheet1
32 1877s/front_end/fe_int_11 sheet1
33 1877s/front_end/level_shift sheet1
34 1877s/front_end/level_shift sheet2
35 1877s/memory sheet1
36 1877s/tester sheet1
37 1877s/timing sheet1
38 1877s/timing sheet2

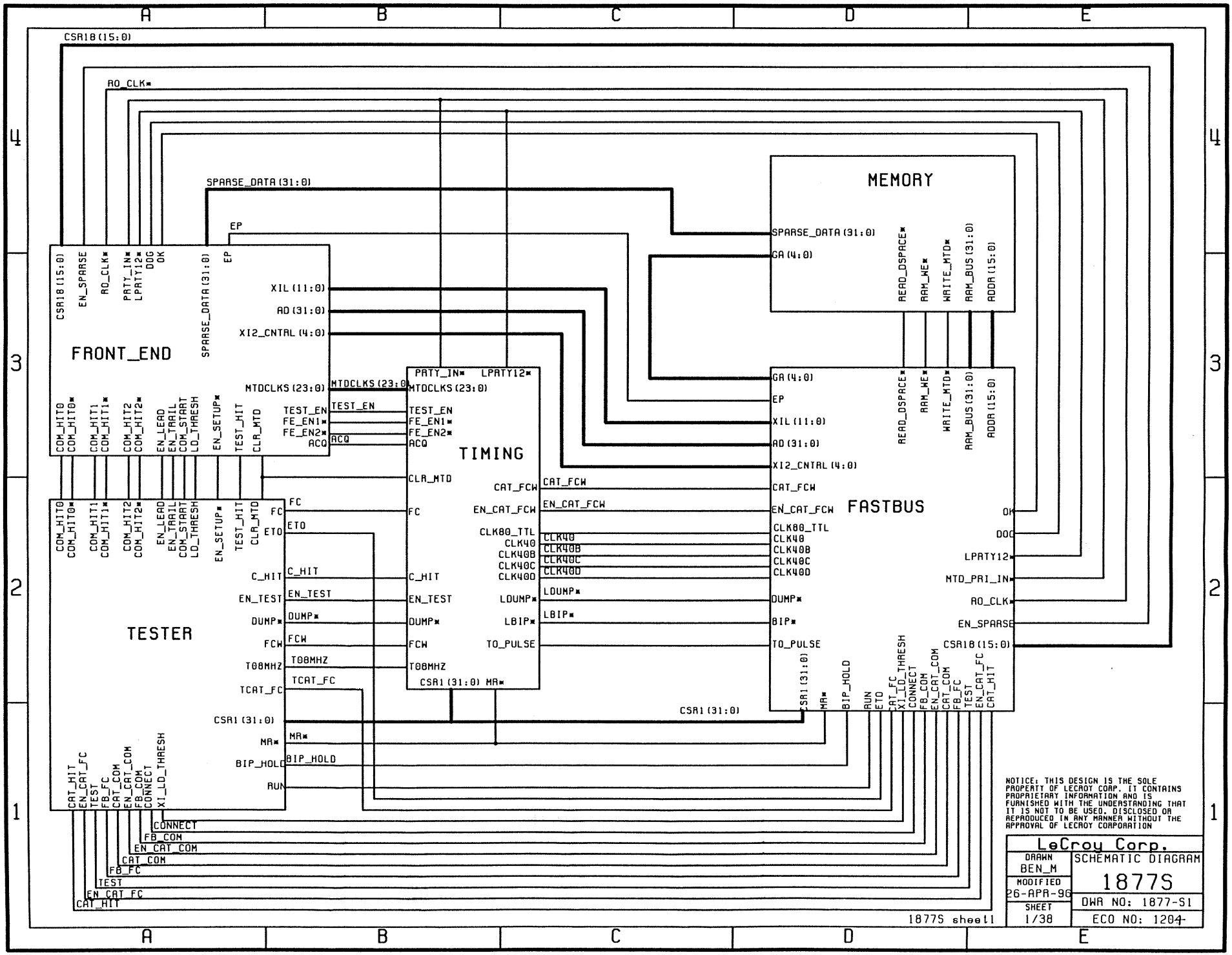
FRONT_END
TIMING
MEMORY
FASTBUS
TESTER
CSR18(15:0)
RO_CLK*
SPARSE_DATA(31:0)
EP
XIL(11:0)
AD(31:0)
XI2_CNTRL(4:0)
MTDCLKS(23:0)
TEST_EN
FE_EN1*
FE_EN2*
ACQ
CLR_MTD
FC
ETO
C_HIT
EN_TEST
DUMP*
FCW
T08MHZ
TCAT_FC
CSR1(31:0)
MA*
BIP_HOLD
RUN
CAT_FCW
EN_CAT_FCW
CLK80_TTL
CLK40
CLK40B
CLK40C
CLK40D
LDUMP*
LBIP*
TO_PULSE
GA(4:0)
READ_DSPACE*
RAM_WE*
WRITE_MTD*
RAM_BUS(31:0)
ADDR(15:0)
OK
DOG
LPATY12*
MTD_PRI_IN*
EN_SPARSE
BIP*
CONNECT
FB_COM
EN_CAT_COM
CAT_COM
FB_FC
EN_CAT_FC
CAT_HIT
NOTICE: THIS DESIGN IS THE SOLE PROPERTY OF LECROY CORP. IT CONTAINS PROPRIETARY INFORMATION AND IS FURNISHED WITH THE UNDERSTANDING THAT IT IS NOT TO BE USED, DISCLOSED OR REPRODUCED IN ANY MANNER WITHOUT THE APPROVAL OF LECROY CORPORATION
LeCroy Corp.
DRAWN BEN_M
MODIFIED 26-APR-90
SHEET 1/38
SCHEMATIC DIAGRAM
1877S
DWR NO: 1877-S1
ECO NO: 1204-
1877S sheet1

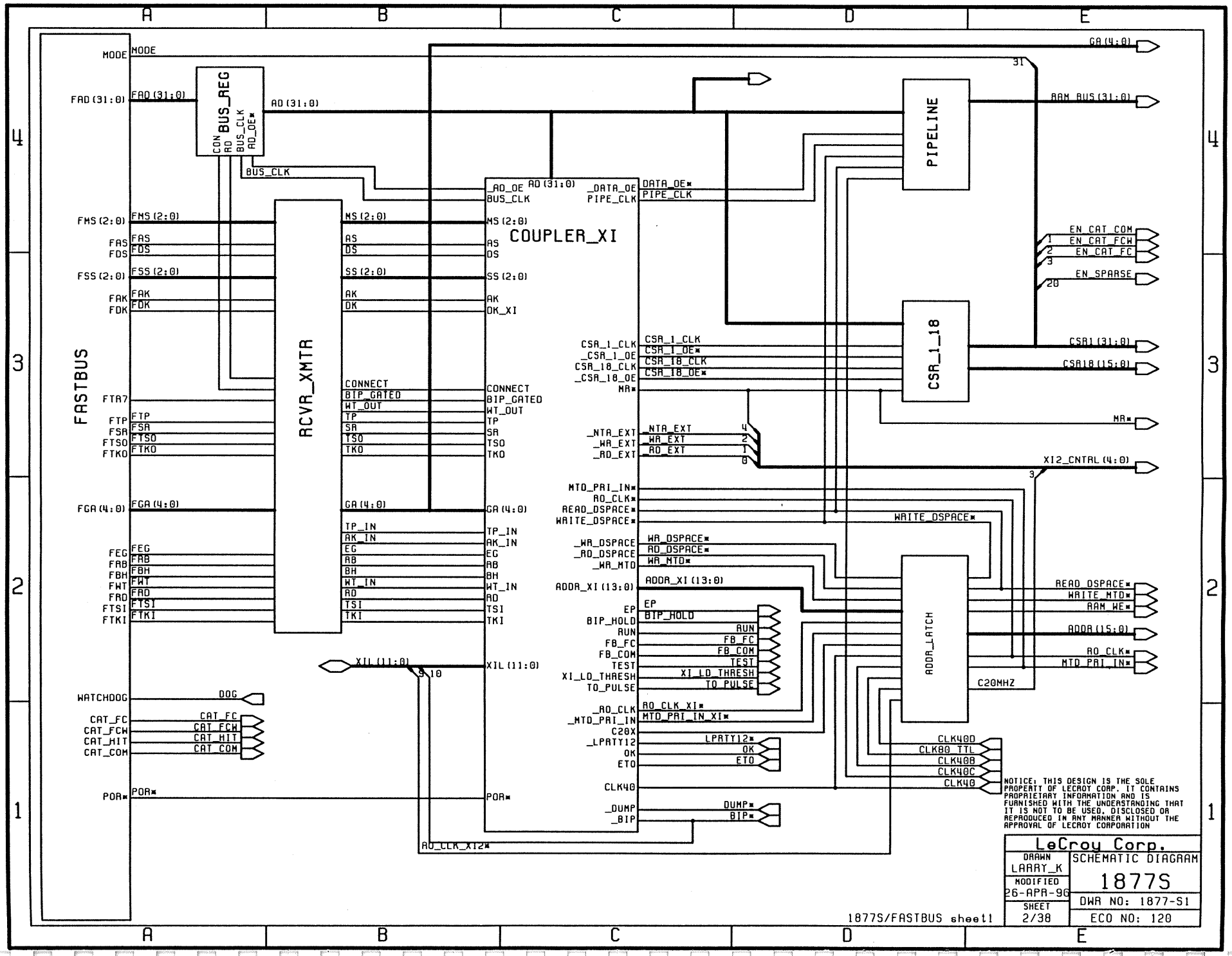
FASTBUS
MODE
FAD (31:0)
FMS (2:0)
FAS
FDS
FSS (2:0)
FAK
FDK
FTA7
FTP
FSA
FTSO
FTKO
FGA (4:0)
FEG
FAB
FBH
FWT
FRD
FTSI
FTKI
WATCHDOG
CAT_FC
CAT_FCW
CAT_HIT
CAT_COM
POR*
BUS_REG
CON
RD
BUS_CLK
AD_OE*
AD (31:0)
BUS_CLK
RCVR_XMTR
MS (2:0)
AS
DS
SS (2:0)
AK
DK
CONNECT
BIP_GATED
WT_OUT
TP
SR
TSO
TKO
GA (4:0)
TP_IN
AK_IN
EG
AB
BH
WT_IN
RD
TSI
TKI
XIL (11:0)
DOG
COUPLER_XI
_AD_OE
BUS_CLK
AD (31:0)
_DATA_OE
PIPE_CLK
DATA_OE*
PIPE_CLK
CSR_1_CLK
_CSR_1_OE
CSR_18_CLK
_CSR_18_OE
MA*
_NTA_EXT
_WR_EXT
_RD_EXT
MTD_PRI_IN*
RD_CLK*
READ_DSPACE*
WRITE_DSPACE*
_WR_DSPACE
_RD_DSPACE
_WR_MTD
ADDR_XI (13:0)
EP
BIP_HOLD
RUN
FB_FC
FB_COM
TEST
XI_LD_THRESH
TO_PULSE
_RD_CLK
_MTD_PRI_IN
C20X
_LPRTY12
OK
ETO
CLK40
_DUMP
_BIP
POR*
RD_CLK_X12*
PIPELINE
CSR_1_18
ADDR_LATCH
GA (4:0)
RAM_BUS (31:0)
EN_CAT_COM
EN_CAT_FCW
EN_CAT_FC
EN_SPARSE
CSR1 (31:0)
CSR18 (15:0)
MA*
XI2_CNTRL (4:0)
WRITE_DSPACE*
WR_DSPACE*
RD_DSPACE*
WR_MTD*
LPRTY12*
DUMP*
BIP*
READ_DSPACE*
WRITE_MTD*
RAM_WE*
ADDR (15:0)
RD_CLK*
MTD_PRI_IN*
C20MHZ
CLK40D
CLK80_TTL
CLK40B
CLK40C
CLK40
NOTICE: THIS DESIGN IS THE SOLE PROPERTY OF LECROY CORP. IT CONTAINS PROPRIETARY INFORMATION AND IS FURNISHED WITH THE UNDERSTANDING THAT IT IS NOT TO BE USED, DISCLOSED OR REPRODUCED IN ANY MANNER WITHOUT THE APPROVAL OF LECROY CORPORATION
LeCroy Corp.
DRAWN LARRY_K
MODIFIED 26-APR-96
SHEET 2/38
SCHEMATIC DIAGRAM
1877S
DWG NO: 1877-S1
ECO NO: 120
1877S/FASTBUS sheet1

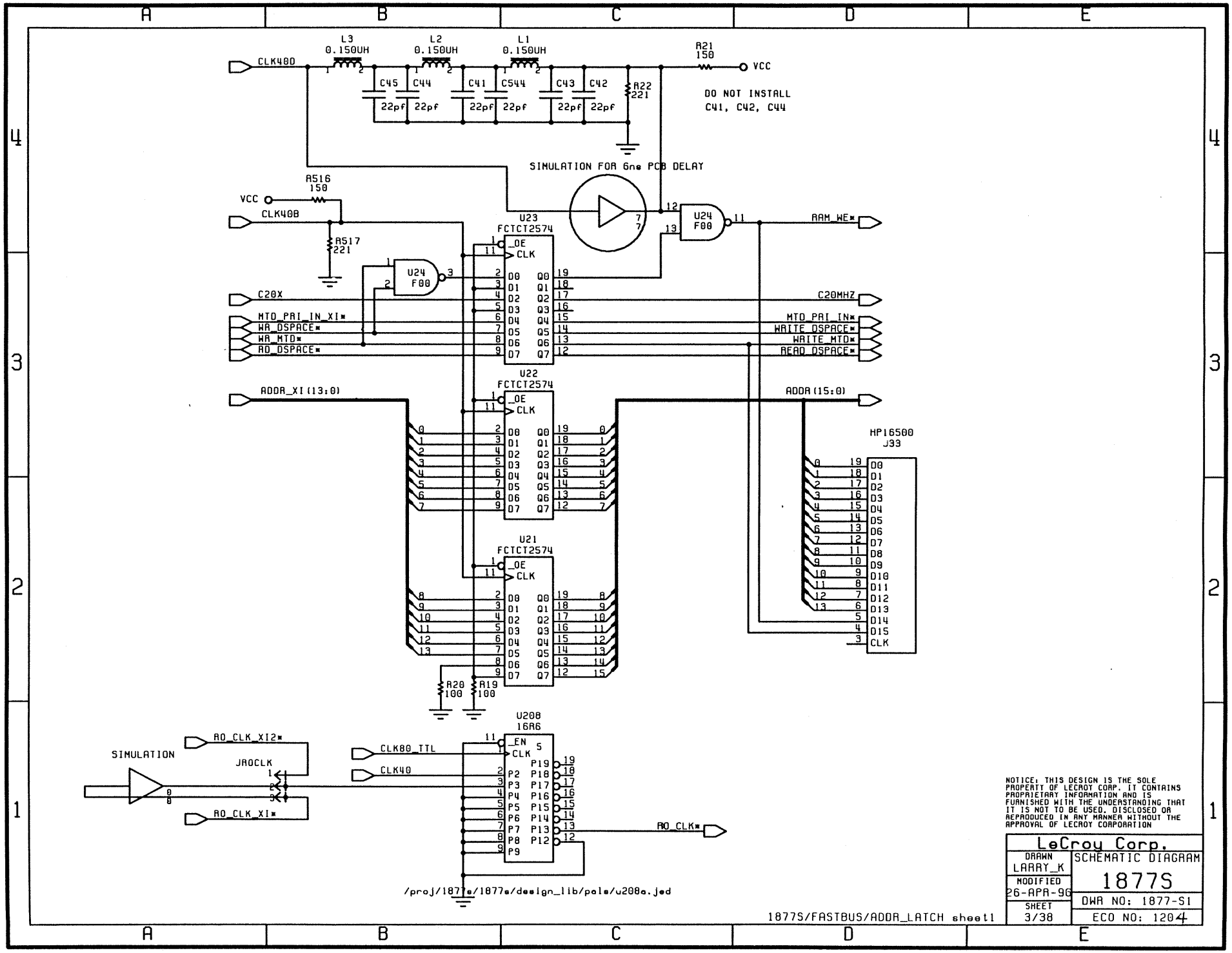
L3 0.150UH
L2 0.150UH
L1 0.150UH
CLK40D
C45 22pf
C44 22pf
C41 22pf
C544 22pf
C43 22pf
C42 22pf
R22 221
R21 150
VCC
DO NOT INSTALL
C41, C42, C44
SIMULATION FOR 6ns PCB DELAY
R516 150
VCC
CLK40B
R517 221
U24 F00
U23 FCTCT2574
U22 FCTCT2574
U21 FCTCT2574
_OE
CLK
D0 D1 D2 D3 D4 D5 D6 D7
Q0 Q1 Q2 Q3 Q4 Q5 Q6 Q7
RAM_WE*
C20X
C20MHZ
MTD_PRI_IN_XI*
WR_DSPACE*
WR_MTD*
RD_DSPACE*
MTD_PRI_IN*
WRITE_DSPACE*
WRITE_MTD*
READ_DSPACE*
ADDR_XI(13:0)
ADDR(15:0)
HP16500 J33
D0 D1 D2 D3 D4 D5 D6 D7 D8 D9 D10 D11 D12 D13 D14 D15 CLK
R20 100
R19 100
U208 16R6
_EN
CLK
P2 P3 P4 P5 P6 P7 P8 P9
P19 P18 P17 P16 P15 P14 P13 P12
CLK80_TTL
CLK40
RO_CLK_XI2*
RO_CLK_XI*
SIMULATION
JROCLK
RO_CLK*
/proj/1877e/1877e/design_lib/pals/u208a.jed
NOTICE: THIS DESIGN IS THE SOLE PROPERTY OF LECROY CORP. IT CONTAINS PROPRIETARY INFORMATION AND IS FURNISHED WITH THE UNDERSTANDING THAT IT IS NOT TO BE USED, DISCLOSED OR REPRODUCED IN ANY MANNER WITHOUT THE APPROVAL OF LECROY CORPORATION
LeCroy Corp.
DRAWN LARRY_K
MODIFIED 26-APR-96
SHEET 3/38
SCHEMATIC DIAGRAM
1877S
DWG NO: 1877-S1
ECO NO: 1204
1877S/FASTBUS/ADDR_LATCH sheet1

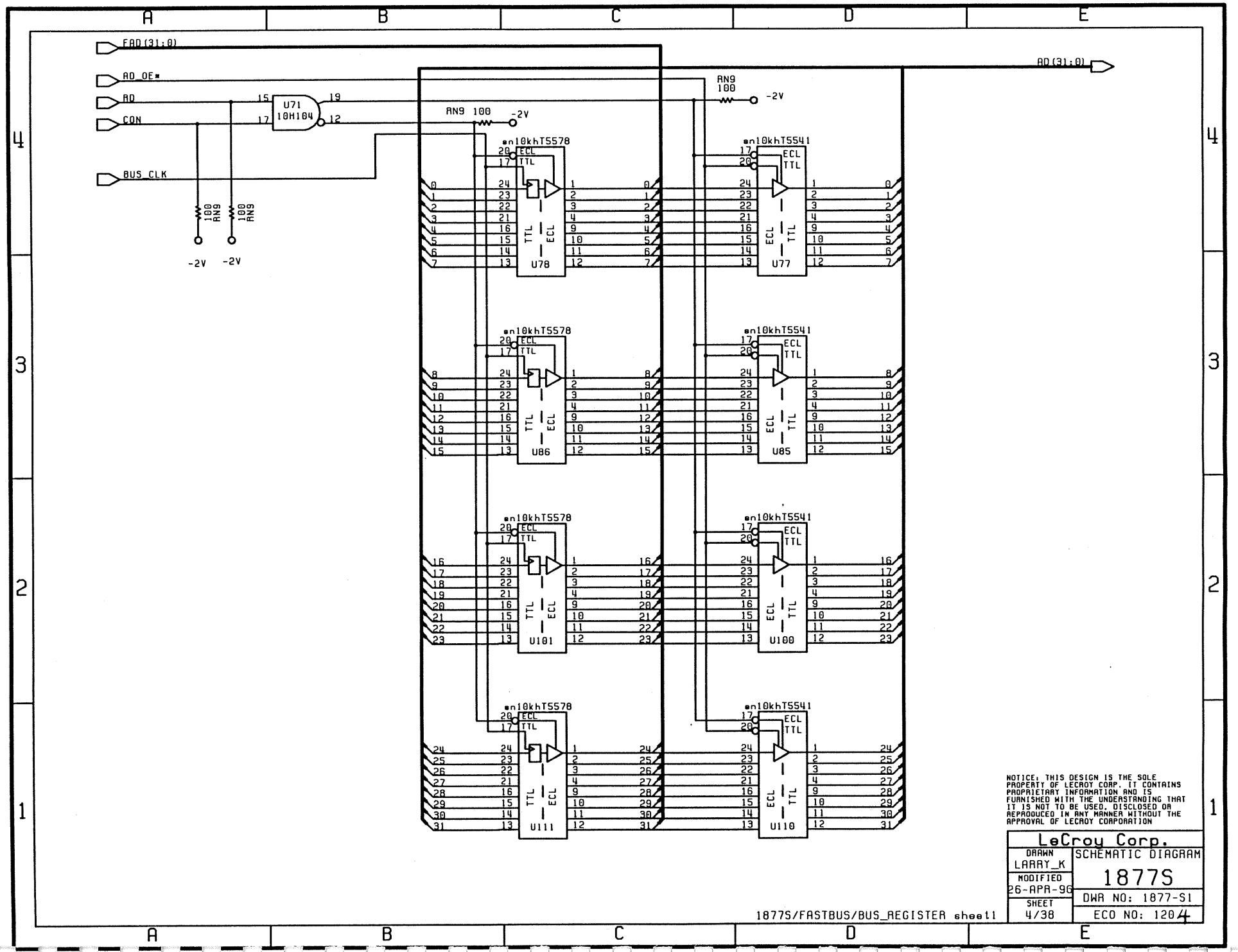

NOTICE: THIS DESIGN IS THE SOLE PROPERTY OF LECROY CORP. IT CONTAINS PROPRIETARY INFORMATION AND IS FURNISHED WITH THE UNDERSTANDING THAT IT IS NOT TO BE USED, DISCLOSED OR REPRODUCED IN ANY MANNER WITHOUT THE APPROVAL OF LECROY CORPORATION

LeCroy Corp.	
DRAWN LARRY_K	SCHEMATIC DIAGRAM
MODIFIED 26-APR-96	1877S
SHEET 4/38	DWA NO: 1877-S1
	ECO NO: 1204

1877S/FASTBUS/BUS_REGISTER sheet1

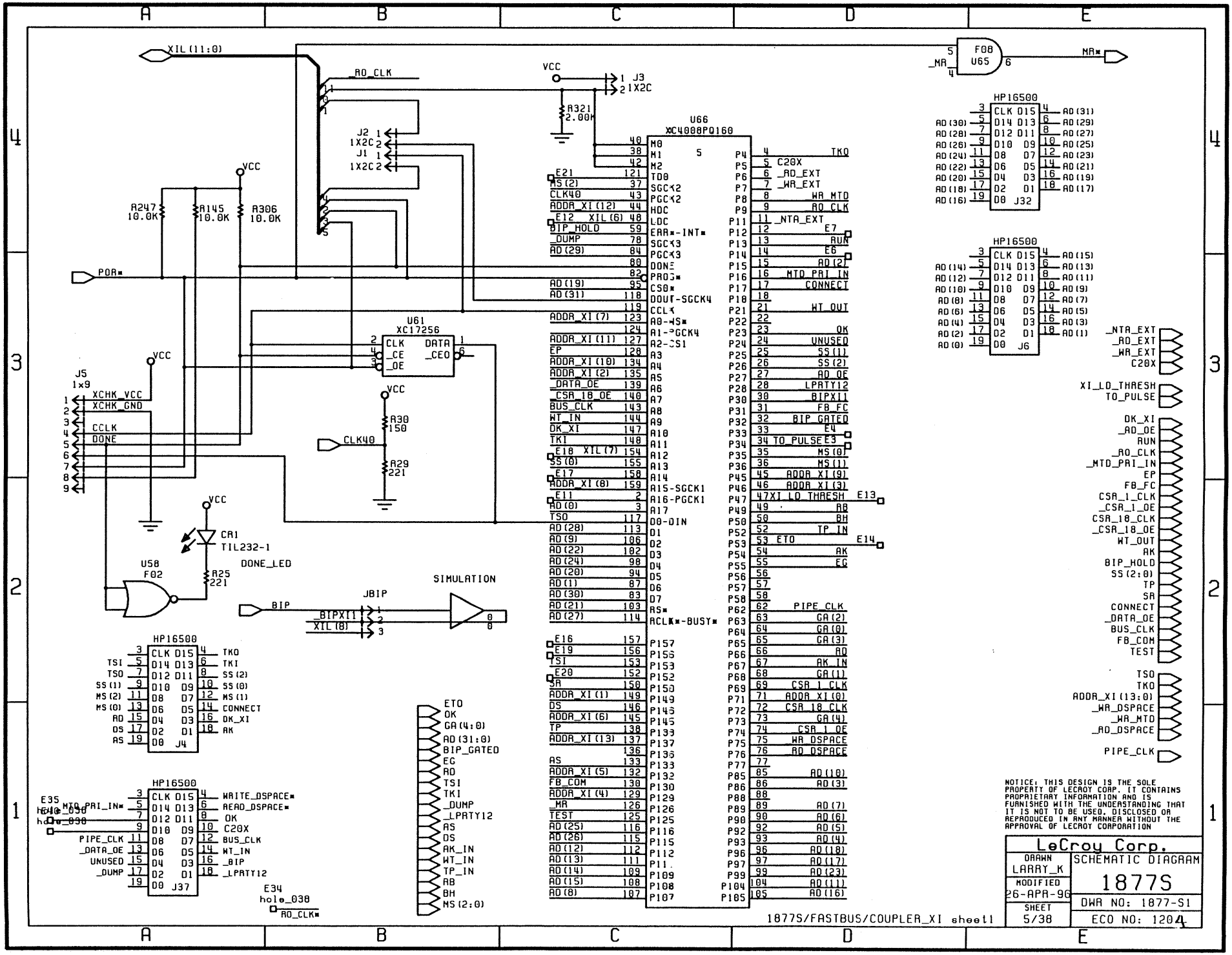
XIL(11:0)
_AO_CLK
VCC
J3
1X2C
R321
2.00K
U66
XC4008PQ160
F08
U65
_MA
MA*
HP16500
J32
J6
J4
J37
J2
J1
R247
10.0K
R145
10.0K
R306
10.0K
POR*
U61
XC17256
CLK
_CE
_OE
DATA
_CEO
J5
1x9
XCHK_VCC
XCHK_GND
CCLK
DONE
R30
150
CLK40
R29
221
CR1
TIL232-1
DONE_LED
U58
F02
R25
221
BIP
JBIP
_BIPXI(1
XIL(8)
SIMULATION
ETO
OK
GA(4:0)
AD(31:0)
BIP_GATED
EG
AO
TSI
TKI
_DUMP
_LPRTY12
AS
DS
AK_IN
WT_IN
TP_IN
AB
BH
MS(2:0)
E35
hole_038
_MTD_PRI_IN*
PIPE_CLK
_DATA_OE
UNUSED
_DUMP
E34
hole_038
_AO_CLK*
_NTA_EXT
_AO_EXT
_WR_EXT
C20X
XI_LD_THRESH
TO_PULSE
OK_XI
_AD_OE
RUN
_AO_CLK
_MTD_PRI_IN
EP
FB_FC
CSR_1_CLK
_CSR_1_OE
CSR_18_CLK
_CSR_18_OE
WT_OUT
AK
BIP_HOLD
SS(2:0)
TP
SA
CONNECT
_DATA_OE
BUS_CLK
FB_COM
TEST
TSO
TKO
ADDR_XI(13:0)
_WR_DSPACE
_WR_MTD
_AD_DSPACE
PIPE_CLK
NOTICE: THIS DESIGN IS THE SOLE PROPERTY OF LECROY CORP. IT CONTAINS PROPRIETARY INFORMATION AND IS FURNISHED WITH THE UNDERSTANDING THAT IT IS NOT TO BE USED, DISCLOSED OR REPRODUCED IN ANY MANNER WITHOUT THE APPROVAL OF LECROY CORPORATION
LeCroy Corp.
DRAWN
LARRY_K
MODIFIED
26-APR-96
SHEET
5/38
SCHEMATIC DIAGRAM
1877S
DWG NO: 1877-S1
ECO NO: 1204
1877S/FASTBUS/COUPLER_XI sheet1

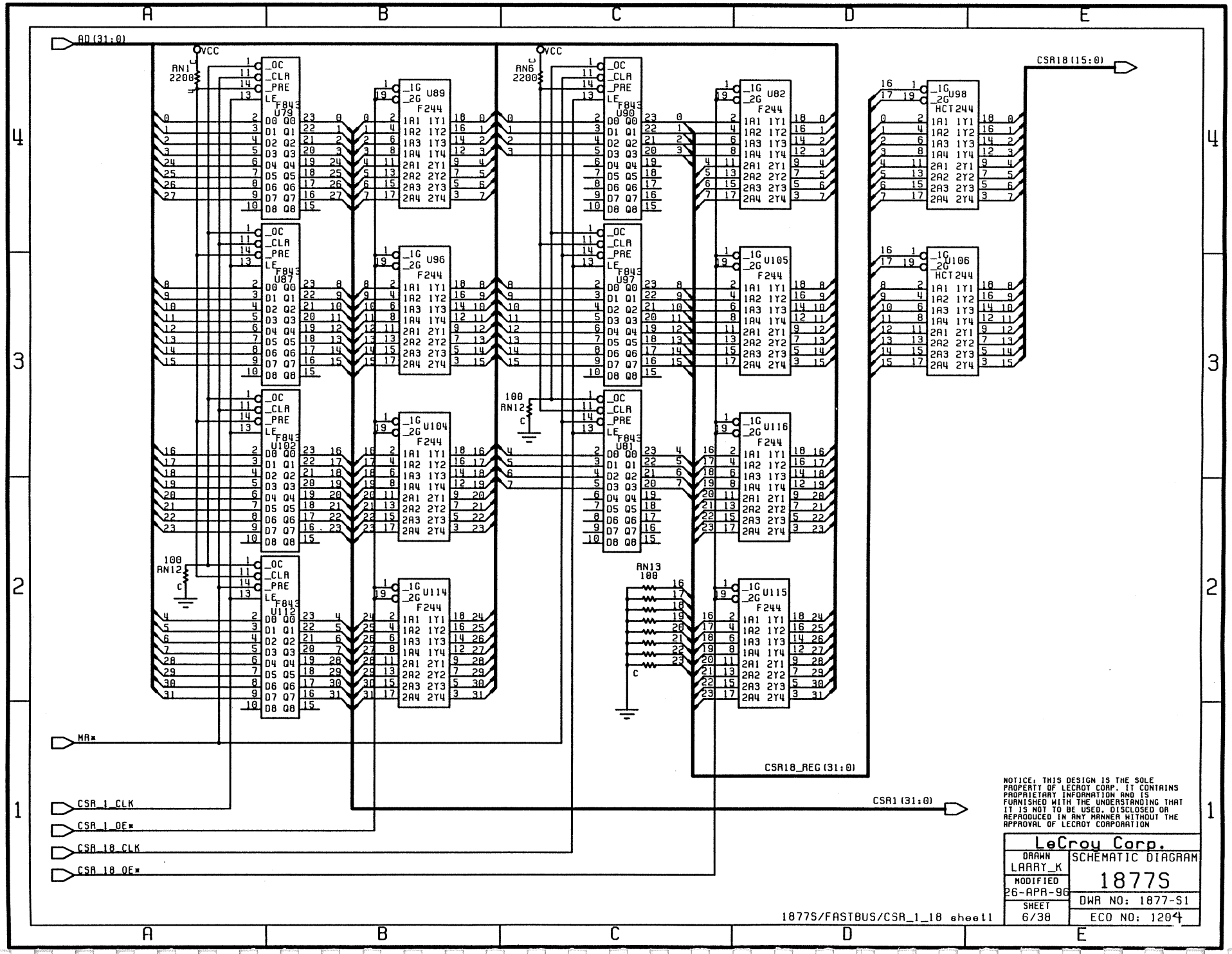

NOTICE: THIS DESIGN IS THE SOLE PROPERTY OF LECROY CORP. IT CONTAINS PROPRIETARY INFORMATION AND IS FURNISHED WITH THE UNDERSTANDING THAT IT IS NOT TO BE USED, DISCLOSED OR REPRODUCED IN ANY MANNER WITHOUT THE APPROVAL OF LECROY CORPORATION

LeCroy Corp.	
DRAWN LARRY_K	SCHEMATIC DIAGRAM
MODIFIED 26-APR-96	1877S
SHEET 6/38	DWG NO: 1877-S1
	ECO NO: 1204

1877S/FASTBUS/CSA_1_18 sheet1

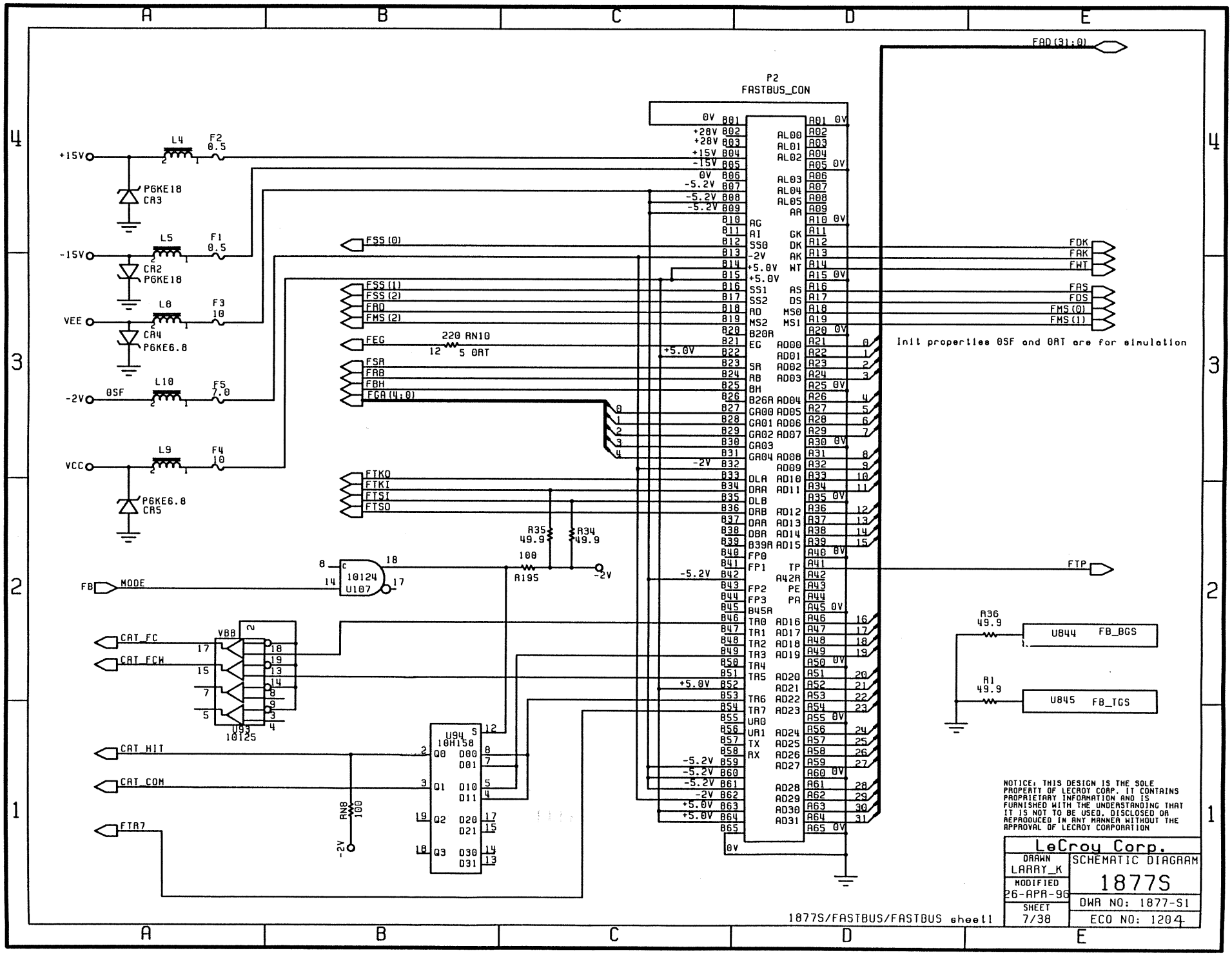
P2
FASTBUS_CON
FAD(31:0)
+15V
-15V
VEE
-2V
VCC
L4
L5
L8
L10
L9
F2 0.5
F1 0.5
F3 10
F5 7.0
F4 10
P6KE18 CR3
CR2 P6KE18
CR4 P6KE6.8
CR5 P6KE6.8
FSS(0)
FSS(1)
FSS(2)
FAD
FMS(2)
FEG
220 RN10
5 0AT
FSR
FAB
FBH
FGA(4:0)
FTKO
FTKI
FTSI
FTSO
FDK
FAK
FWT
FAS
FDS
FMS(0)
FMS(1)
FTP
Init properties 0SF and 0AT are for simulation
A35 49.9
A34 49.9
R195 100
U107 10124
FB MODE
CAT_FC
CAT_FCW
U93 10125
CAT_HIT
CAT_COM
FTA7
U94 10H158
RN8 100
A36 49.9
U844 FB_BGS
A1 49.9
U845 FB_TGS
NOTICE: THIS DESIGN IS THE SOLE PROPERTY OF LECROY CORP. IT CONTAINS PROPRIETARY INFORMATION AND IS FURNISHED WITH THE UNDERSTANDING THAT IT IS NOT TO BE USED, DISCLOSED OR REPRODUCED IN ANY MANNER WITHOUT THE APPROVAL OF LECROY CORPORATION
LeCroy Corp.
DRAWN LARRY_K
MODIFIED 26-APR-96
SHEET 7/38
SCHEMATIC DIAGRAM
1877S
DWR NO: 1877-S1
ECO NO: 1204
1877S/FASTBUS/FASTBUS sheet1

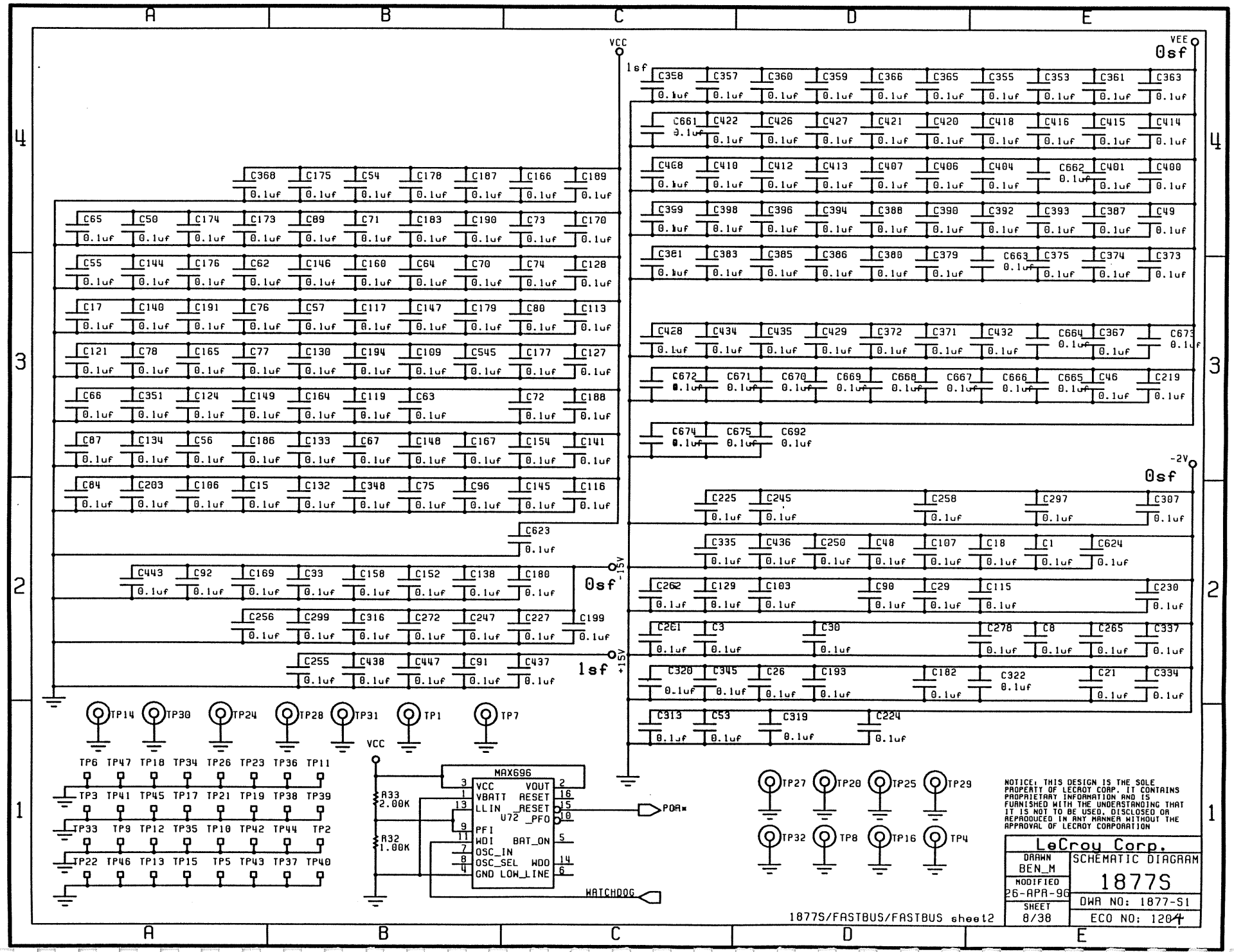
VCC
VEE
0sf
1sf
C358 C357 C360 C359 C366 C365 C355 C353 C361 C363
C661 C422 C426 C427 C421 C420 C418 C416 C415 C414
C468 C410 C412 C413 C407 C406 C404 C662 C401 C400
C399 C398 C396 C394 C388 C390 C392 C393 C387 C49
C381 C383 C385 C386 C380 C379 C663 C375 C374 C373
C428 C434 C435 C429 C372 C371 C432 C664 C367 C673
C672 C671 C670 C669 C668 C667 C666 C665 C46 C219
C674 C675 C692
-2V
0sf
C225 C245 C258 C297 C307
C335 C436 C250 C48 C107 C18 C1 C624
C262 C129 C103 C90 C29 C115 C230
C261 C3 C30 C278 C8 C265 C337
C320 C345 C26 C193 C182 C322 C21 C334
C313 C53 C319 C224
C368 C175 C54 C178 C187 C166 C189
C65 C50 C174 C173 C89 C71 C183 C190 C73 C170
C55 C144 C176 C62 C146 C160 C64 C70 C74 C128
C17 C140 C191 C76 C57 C117 C147 C179 C80 C113
C121 C78 C165 C77 C130 C194 C109 C545 C177 C127
C66 C351 C124 C149 C164 C119 C63 C72 C188
C87 C134 C56 C186 C133 C67 C148 C167 C154 C141
C84 C203 C106 C15 C132 C348 C75 C96 C145 C116
C623
C443 C92 C169 C33 C158 C152 C138 C180
-15V
0sf
C256 C299 C316 C272 C247 C227 C199
C255 C438 C447 C91 C437
+15V
1sf
TP14 TP30 TP24 TP28 TP31 TP1 TP7
TP6 TP47 TP18 TP34 TP26 TP23 TP36 TP11
TP3 TP41 TP45 TP17 TP21 TP19 TP38 TP39
TP33 TP9 TP12 TP35 TP10 TP42 TP44 TP2
TP22 TP46 TP13 TP15 TP5 TP43 TP37 TP40
VCC
R33 2.00K
R32 1.00K
MAX696
VCC VOUT
VBATT RESET
LLIN RESET
U72 _PFO
PFI
WDI BAT_ON
OSC_IN
OSC_SEL WDO
GND LOW_LINE
POR*
WATCHDOG
TP27 TP20 TP25 TP29
TP32 TP8 TP16 TP4
NOTICE: THIS DESIGN IS THE SOLE PROPERTY OF LECROY CORP. IT CONTAINS PROPRIETARY INFORMATION AND IS FURNISHED WITH THE UNDERSTANDING THAT IT IS NOT TO BE USED, DISCLOSED OR REPRODUCED IN ANY MANNER WITHOUT THE APPROVAL OF LECROY CORPORATION
LeCroy Corp.
DRAWN BEN_M
SCHEMATIC DIAGRAM
1877S
MODIFIED 26-APR-96
DWG NO: 1877-S1
SHEET 8/38
ECO NO: 1204
1877S/FASTBUS/FASTBUS sheet2

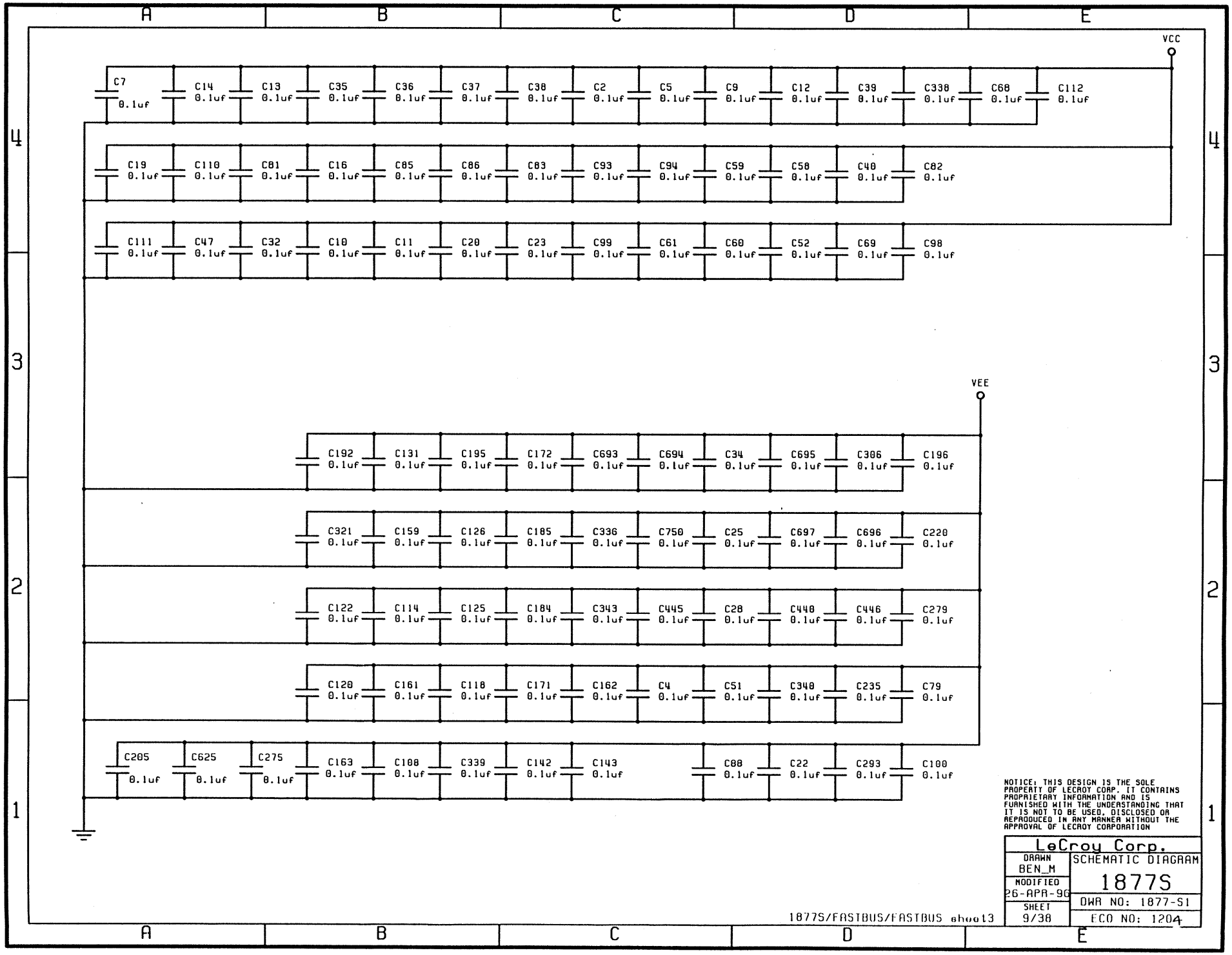
VCC
C7 0.1uf
C14 0.1uf
C13 0.1uf
C35 0.1uf
C36 0.1uf
C37 0.1uf
C38 0.1uf
C2 0.1uf
C5 0.1uf
C9 0.1uf
C12 0.1uf
C39 0.1uf
C338 0.1uf
C68 0.1uf
C112 0.1uf
C19 0.1uf
C110 0.1uf
C81 0.1uf
C16 0.1uf
C85 0.1uf
C86 0.1uf
C83 0.1uf
C93 0.1uf
C94 0.1uf
C59 0.1uf
C58 0.1uf
C40 0.1uf
C82 0.1uf
C111 0.1uf
C47 0.1uf
C32 0.1uf
C10 0.1uf
C11 0.1uf
C20 0.1uf
C23 0.1uf
C99 0.1uf
C61 0.1uf
C60 0.1uf
C52 0.1uf
C69 0.1uf
C98 0.1uf
VEE
C192 0.1uf
C131 0.1uf
C195 0.1uf
C172 0.1uf
C693 0.1uf
C694 0.1uf
C34 0.1uf
C695 0.1uf
C306 0.1uf
C196 0.1uf
C321 0.1uf
C159 0.1uf
C126 0.1uf
C185 0.1uf
C336 0.1uf
C750 0.1uf
C25 0.1uf
C697 0.1uf
C696 0.1uf
C220 0.1uf
C122 0.1uf
C114 0.1uf
C125 0.1uf
C184 0.1uf
C343 0.1uf
C445 0.1uf
C28 0.1uf
C440 0.1uf
C446 0.1uf
C279 0.1uf
C120 0.1uf
C161 0.1uf
C118 0.1uf
C171 0.1uf
C162 0.1uf
C4 0.1uf
C51 0.1uf
C340 0.1uf
C235 0.1uf
C79 0.1uf
C205 0.1uf
C625 0.1uf
C275 0.1uf
C163 0.1uf
C108 0.1uf
C339 0.1uf
C142 0.1uf
C143 0.1uf
C88 0.1uf
C22 0.1uf
C293 0.1uf
C100 0.1uf
NOTICE: THIS DESIGN IS THE SOLE PROPERTY OF LECROY CORP. IT CONTAINS PROPRIETARY INFORMATION AND IS FURNISHED WITH THE UNDERSTANDING THAT IT IS NOT TO BE USED, DISCLOSED OR REPRODUCED IN ANY MANNER WITHOUT THE APPROVAL OF LECROY CORPORATION
LeCroy Corp.
DRAWN BEN_M
MODIFIED 26-APR-96
SHEET 9/38
SCHEMATIC DIAGRAM
1877S
DWR NO: 1877-S1
ECO NO: 1204
1877S/FASTBUS/FASTBUS sheet3

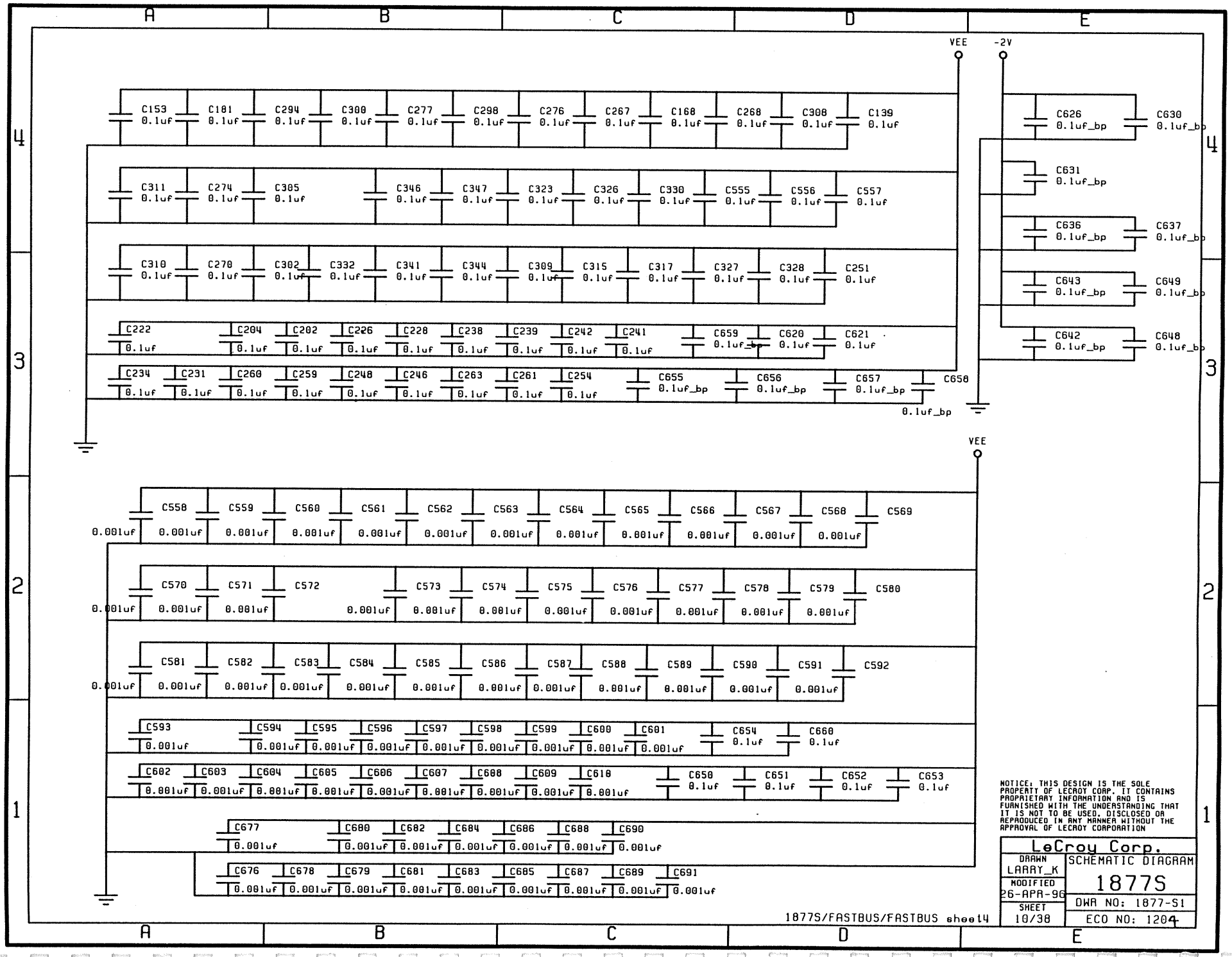
VEE
-2V
C153 0.1uf
C181 0.1uf
C294 0.1uf
C300 0.1uf
C277 0.1uf
C298 0.1uf
C276 0.1uf
C267 0.1uf
C168 0.1uf
C268 0.1uf
C308 0.1uf
C139 0.1uf
C311 0.1uf
C274 0.1uf
C305 0.1uf
C346 0.1uf
C347 0.1uf
C323 0.1uf
C326 0.1uf
C330 0.1uf
C555 0.1uf
C556 0.1uf
C557 0.1uf
C310 0.1uf
C270 0.1uf
C302 0.1uf
C332 0.1uf
C341 0.1uf
C344 0.1uf
C309 0.1uf
C315 0.1uf
C317 0.1uf
C327 0.1uf
C328 0.1uf
C251 0.1uf
C222 0.1uf
C204 0.1uf
C202 0.1uf
C226 0.1uf
C228 0.1uf
C238 0.1uf
C239 0.1uf
C242 0.1uf
C241 0.1uf
C659 0.1uf_bp
C620 0.1uf
C621 0.1uf
C234 0.1uf
C231 0.1uf
C260 0.1uf
C259 0.1uf
C248 0.1uf
C246 0.1uf
C263 0.1uf
C261 0.1uf
C254 0.1uf
C655 0.1uf_bp
C656 0.1uf_bp
C657 0.1uf_bp
C658 0.1uf_bp
C626 0.1uf_bp
C630 0.1uf_bp
C631 0.1uf_bp
C636 0.1uf_bp
C637 0.1uf_bp
C643 0.1uf_bp
C649 0.1uf_bp
C642 0.1uf_bp
C648 0.1uf_bp
VEE
C558 0.001uf
C559 0.001uf
C560 0.001uf
C561 0.001uf
C562 0.001uf
C563 0.001uf
C564 0.001uf
C565 0.001uf
C566 0.001uf
C567 0.001uf
C568 0.001uf
C569 0.001uf
C570 0.001uf
C571 0.001uf
C572 0.001uf
C573 0.001uf
C574 0.001uf
C575 0.001uf
C576 0.001uf
C577 0.001uf
C578 0.001uf
C579 0.001uf
C580 0.001uf
C581 0.001uf
C582 0.001uf
C583 0.001uf
C584 0.001uf
C585 0.001uf
C586 0.001uf
C587 0.001uf
C588 0.001uf
C589 0.001uf
C590 0.001uf
C591 0.001uf
C592 0.001uf
C593 0.001uf
C594 0.001uf
C595 0.001uf
C596 0.001uf
C597 0.001uf
C598 0.001uf
C599 0.001uf
C600 0.001uf
C601 0.001uf
C654 0.1uf
C660 0.1uf
C602 0.001uf
C603 0.001uf
C604 0.001uf
C605 0.001uf
C606 0.001uf
C607 0.001uf
C608 0.001uf
C609 0.001uf
C610 0.001uf
C650 0.1uf
C651 0.1uf
C652 0.1uf
C653 0.1uf
C677 0.001uf
C680 0.001uf
C682 0.001uf
C684 0.001uf
C686 0.001uf
C688 0.001uf
C690 0.001uf
C676 0.001uf
C678 0.001uf
C679 0.001uf
C681 0.001uf
C683 0.001uf
C685 0.001uf
C687 0.001uf
C689 0.001uf
C691 0.001uf
NOTICE: THIS DESIGN IS THE SOLE PROPERTY OF LECROY CORP. IT CONTAINS PROPRIETARY INFORMATION AND IS FURNISHED WITH THE UNDERSTANDING THAT IT IS NOT TO BE USED, DISCLOSED OR REPRODUCED IN ANY MANNER WITHOUT THE APPROVAL OF LECROY CORPORATION
LeCroy Corp.
DRAWN LARRY_K
MODIFIED 26-APR-96
SHEET 10/38
SCHEMATIC DIAGRAM
1877S
DWG NO: 1877-S1
ECO NO: 1204
1877S/FASTBUS/FASTBUS sheet4

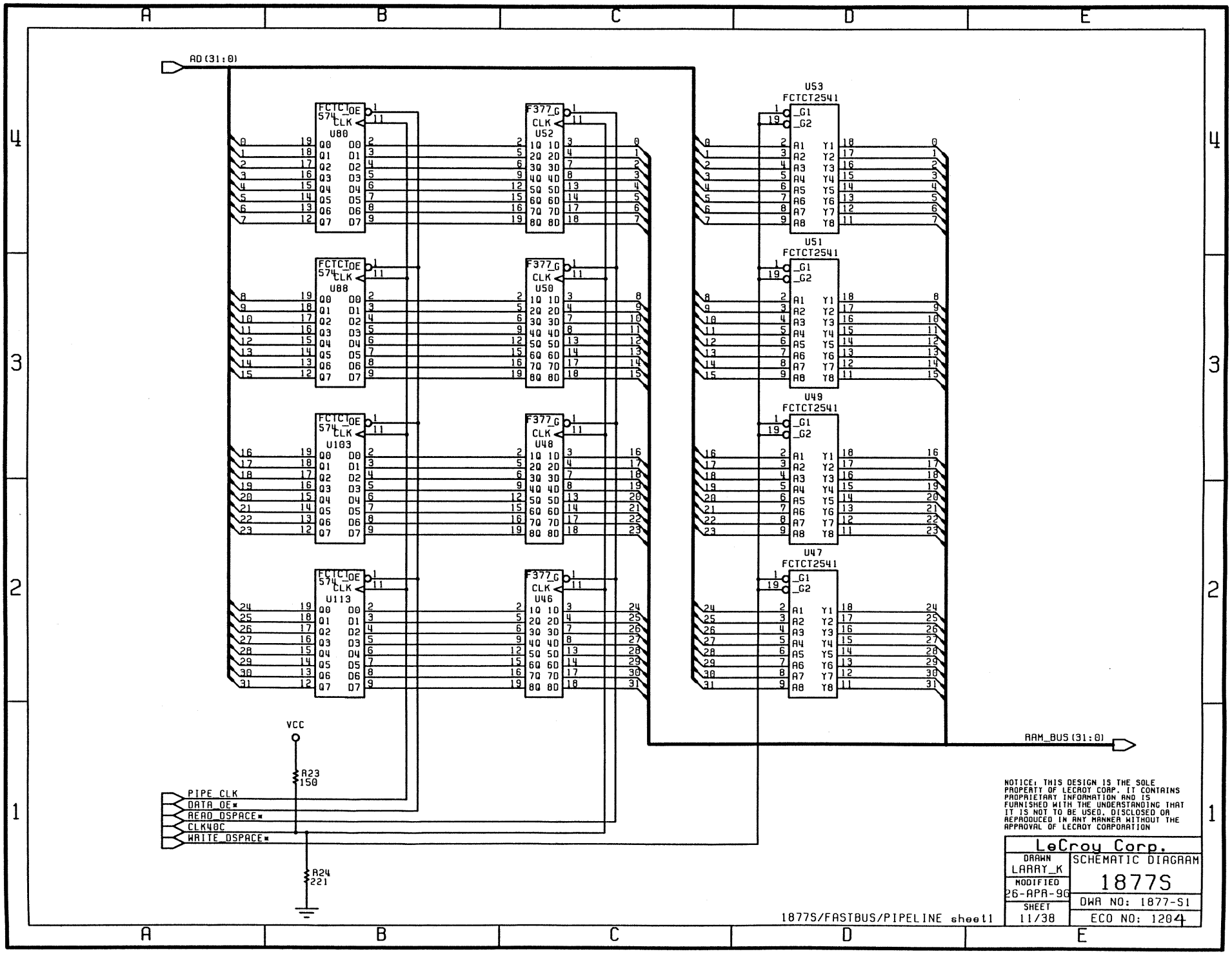
AD(31:0)
U80
U88
U103
U113
U52
U50
U48
U46
U53
U51
U49
U47
FCTCT2541
VCC
R23
150
R24
221
PIPE_CLK
DATA_OE*
READ_DSPACE*
CLK40C
WRITE_DSPACE*
RAM_BUS(31:0)
NOTICE: THIS DESIGN IS THE SOLE PROPERTY OF LECROY CORP. IT CONTAINS PROPRIETARY INFORMATION AND IS FURNISHED WITH THE UNDERSTANDING THAT IT IS NOT TO BE USED, DISCLOSED OR REPRODUCED IN ANY MANNER WITHOUT THE APPROVAL OF LECROY CORPORATION
LeCroy Corp.
DRAWN LARRY_K
MODIFIED 26-APR-96
SHEET 11/38
SCHEMATIC DIAGRAM
1877S
DWG NO: 1877-S1
ECO NO: 1204
1877S/FASTBUS/PIPELINE sheet1

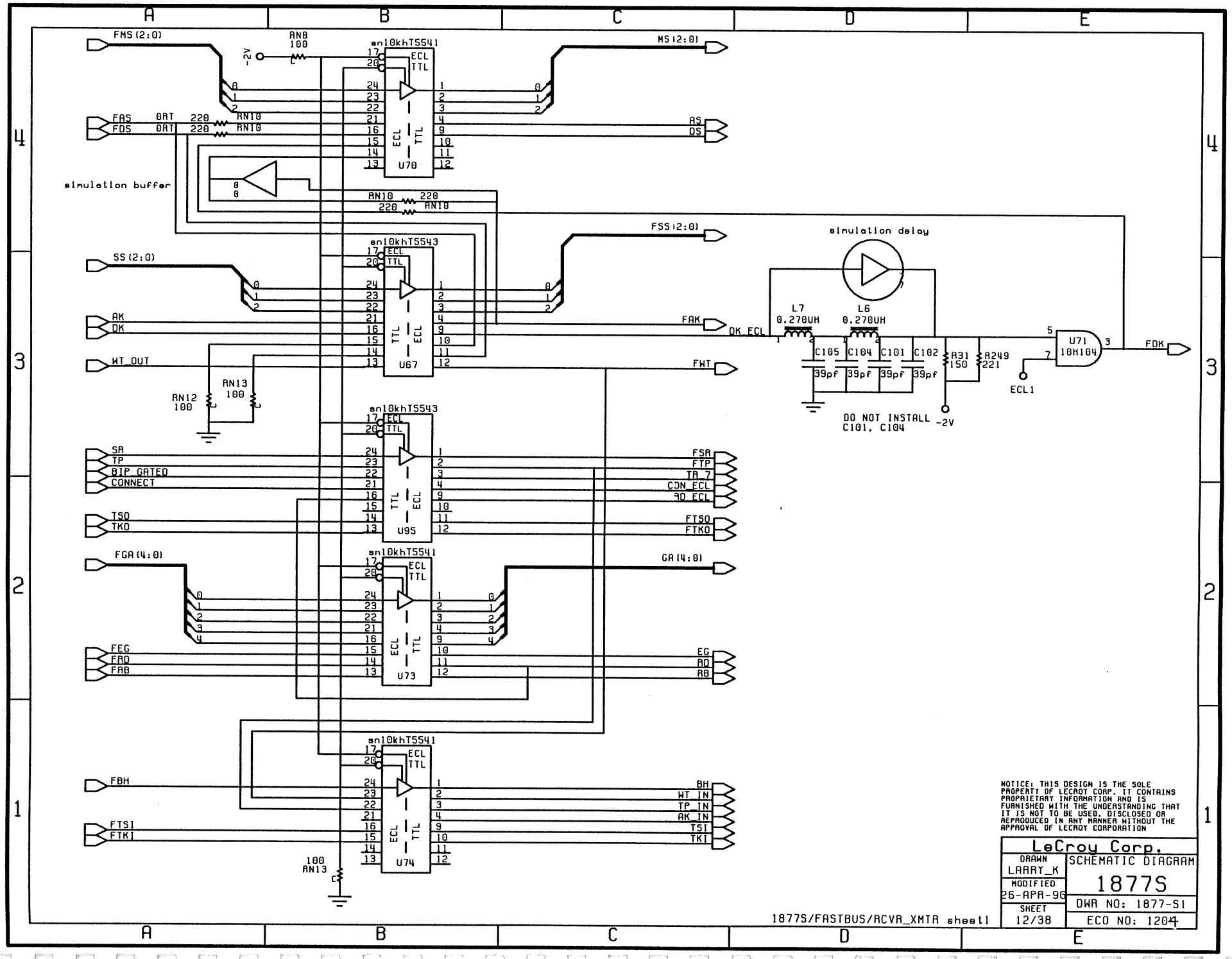
FMS(2:0)
-2V
RN8
100
sn10khT5541
ECL
TTL
U70
MS(2:0)
FAS
FDS
0RT
220
RN10
AS
DS
simulation buffer
SS(2:0)
sn10khT5543
U67
FSS(2:0)
AK
DK
WT_OUT
RN12
100
RN13
100
FAK
FWT
simulation delay
L7
0.270UH
L6
0.270UH
DK_ECL
C105
C104
C101
C102
39pf
A31
150
A249
221
U71
10H104
ECL1
FDK
DO NOT INSTALL
C101, C104
-2V
SA
TP
BIP_GATED
CONNECT
U95
FSA
FTP
TA_7
CON_ECL
BD_ECL
TSO
TKO
FTSO
FTKO
FGA(4:0)
U73
GA(4:0)
FEG
FAD
FAB
EG
AD
AB
U74
FBH
FTSI
FTKI
BH
WT_IN
TP_IN
AK_IN
TSI
TKI
100
RN13
NOTICE: THIS DESIGN IS THE SOLE PROPERTY OF LECROY CORP. IT CONTAINS PROPRIETARY INFORMATION AND IS FURNISHED WITH THE UNDERSTANDING THAT IT IS NOT TO BE USED, DISCLOSED OR REPRODUCED IN ANY MANNER WITHOUT THE APPROVAL OF LECROY CORPORATION
LeCroy Corp.
DRAWN
LARRY_K
MODIFIED
26-APR-96
SHEET
12/38
SCHEMATIC DIAGRAM
1877S
DWR NO: 1877-S1
ECO NO: 1204
1877S/FASTBUS/RCVR_XMTR sheet1

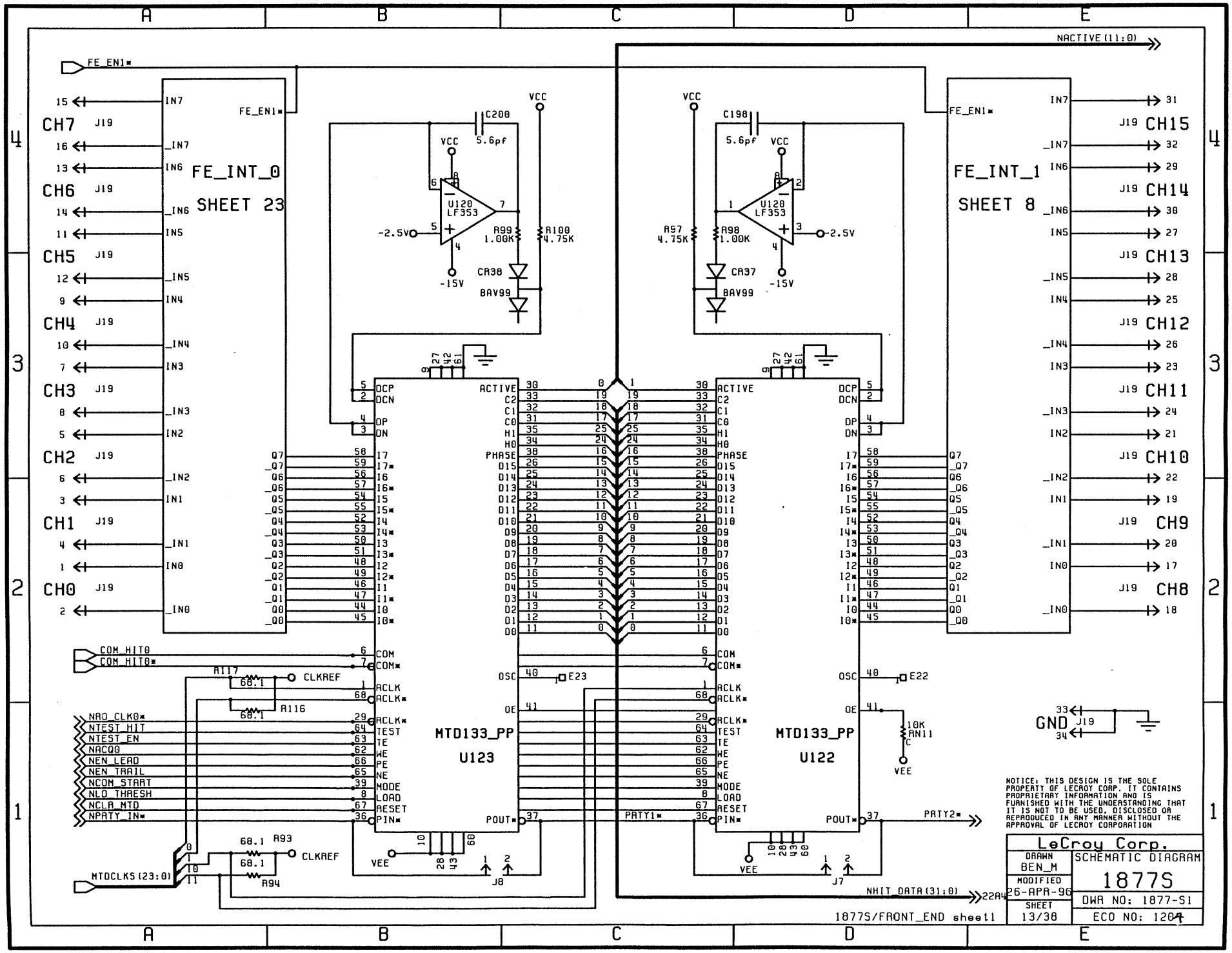
FE_EN1*
NACTIVE(11:0)
FE_INT_0
SHEET 23
FE_INT_1
SHEET 8
CH7 J19
CH6 J19
CH5 J19
CH4 J19
CH3 J19
CH2 J19
CH1 J19
CH0 J19
CH15 J19
CH14 J19
CH13 J19
CH12 J19
CH11 J19
CH10 J19
CH9 J19
CH8 J19
C200 5.6pf
C198 5.6pf
U120 LF353
R99 1.00K
R100 4.75K
R97 4.75K
R98 1.00K
CR36
CR37
BAV99
-2.5V
2.5V
-15V
VCC
MTD133_PP
U123
U122
COM_HIT0
COM_HIT0*
R117 68.1
R116 68.1
CLKREF
NRO_CLK0*
NTEST_HIT
NTEST_EN
NACQ0
NEN_LEAD
NEN_TRAIL
NCOM_START
NLO_THRESH
NCLR_MTD
NPRTY_IN*
MTDCLKS(23:0)
R93 68.1
R94 68.1
VEE
J8
J7
E23
E22
RN11 10K
GND J19
PRTY1*
PRTY2*
NHIT_DATA(31:0)
22A4
NOTICE: THIS DESIGN IS THE SOLE PROPERTY OF LECROY CORP. IT CONTAINS PROPRIETARY INFORMATION AND IS FURNISHED WITH THE UNDERSTANDING THAT IT IS NOT TO BE USED, DISCLOSED OR REPRODUCED IN ANY MANNER WITHOUT THE APPROVAL OF LECROY CORPORATION
LeCroy Corp.
DRAWN BEN_M
MODIFIED 26-APR-96
SHEET 13/38
SCHEMATIC DIAGRAM
1877S
DWG NO: 1877-S1
ECO NO: 1204
1877S/FRONT_END sheet1

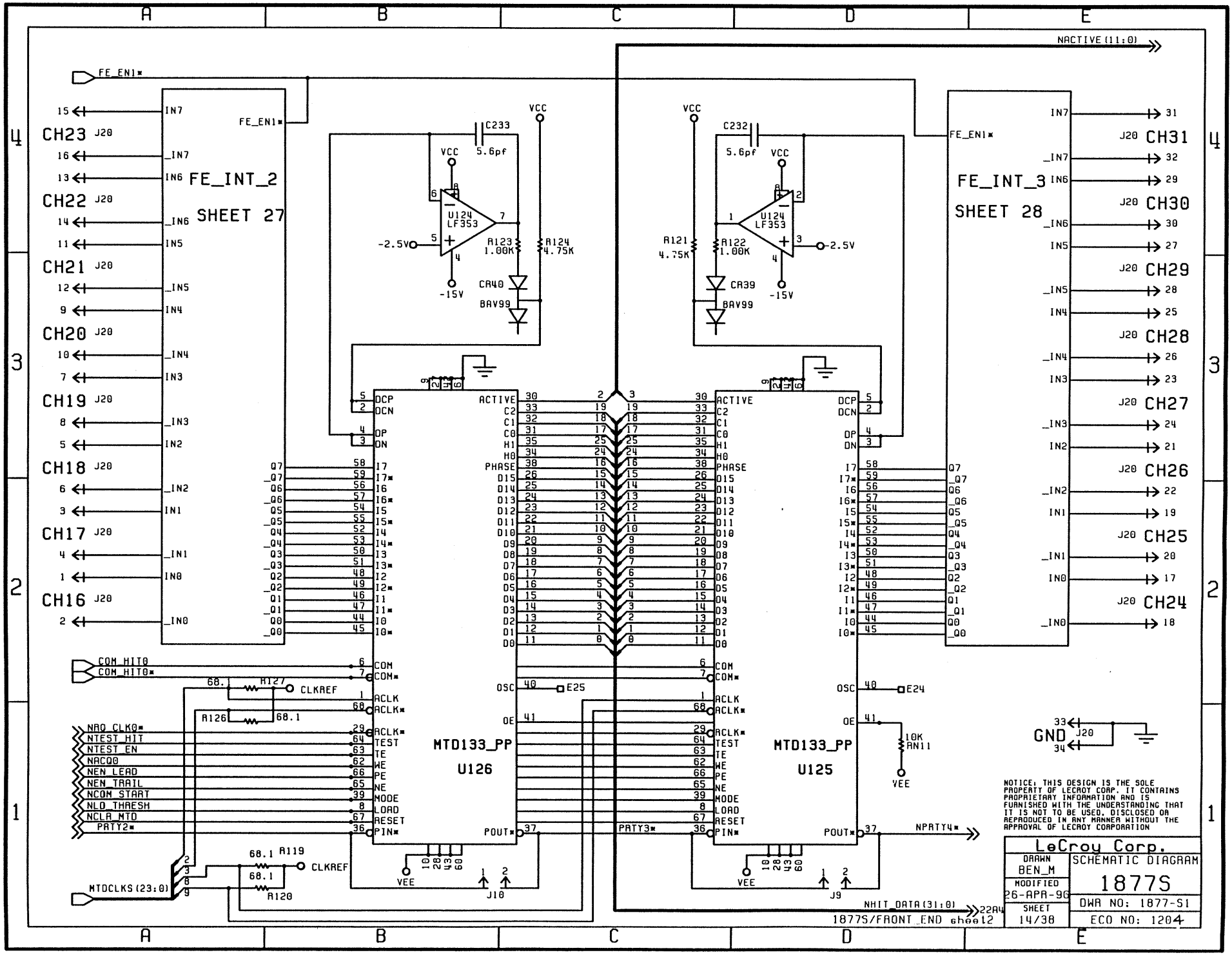
FE_INT_2
SHEET 27
FE_INT_3
SHEET 28
MTD133_PP
U126
MTD133_PP
U125
U124
LF353
C233
5.6pf
C232
5.6pf
R123
1.00K
R124
4.75K
R121
4.75K
R122
1.00K
CR40
BAV99
CR39
BAV99
-2.5V
-15V
VCC
VEE
FE_EN1*
NACTIVE(11:0)
CH23 J20
CH22 J20
CH21 J20
CH20 J20
CH19 J20
CH18 J20
CH17 J20
CH16 J20
CH31 J20
CH30 J20
CH29 J20
CH28 J20
CH27 J20
CH26 J20
CH25 J20
CH24 J20
GND J20
COM_HIT0
COM_HIT0*
R127
R126
R119
R120
CLKREF
NAQ_CLK0*
NTEST_HIT
NTEST_EN
NACQ0
NEN_LEAD
NEN_TRAIL
NCOM_START
NLO_THRESH
NCLA_MTD
PATY2*
PATY3*
MTDCLKS(23:0)
E25
E24
10K
RN11
J10
J9
NPATY4*
NHIT_DATA(31:0)
22A4
1877S/FRONT_END sheet2
NOTICE: THIS DESIGN IS THE SOLE PROPERTY OF LECROY CORP. IT CONTAINS PROPRIETARY INFORMATION AND IS FURNISHED WITH THE UNDERSTANDING THAT IT IS NOT TO BE USED, DISCLOSED OR REPRODUCED IN ANY MANNER WITHOUT THE APPROVAL OF LECROY CORPORATION
LeCroy Corp.
DRAWN BEN_M
MODIFIED 26-APR-96
SHEET 14/38
SCHEMATIC DIAGRAM
1877S
DWA NO: 1877-S1
ECO NO: 1204

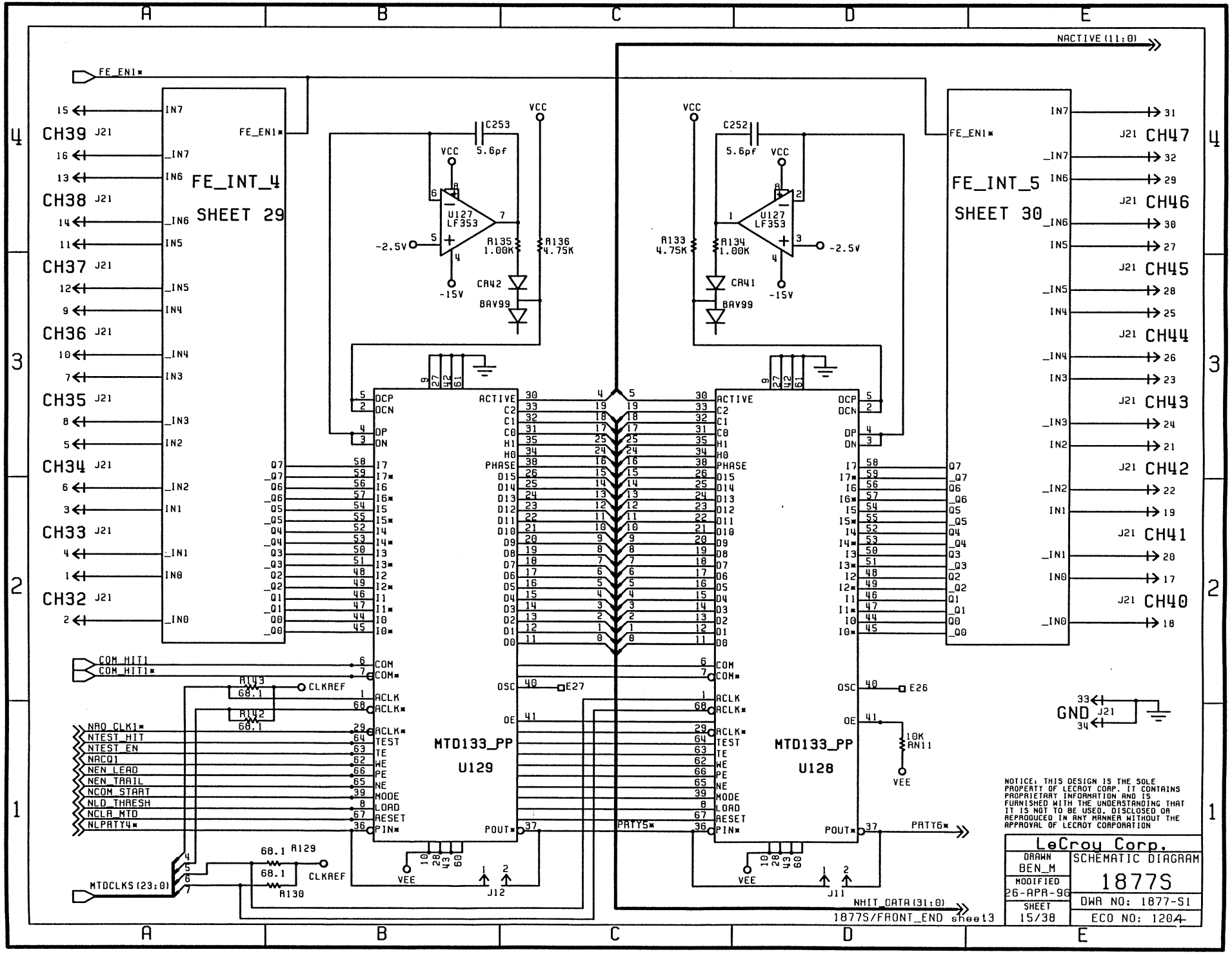
FE_INT_4
SHEET 29
FE_INT_5
SHEET 30
MTD133_PP
U129
MTD133_PP
U128
U127
LF353
C253
5.6pf
C252
5.6pf
R135
1.00K
R136
4.75K
R133
4.75K
R134
1.00K
CR42
CR41
BAV99
-2.5V
-15V
VCC
VEE
NACTIVE(11:0)
FE_EN1*
CH39 J21
CH38 J21
CH37 J21
CH36 J21
CH35 J21
CH34 J21
CH33 J21
CH32 J21
CH47 J21
CH46 J21
CH45 J21
CH44 J21
CH43 J21
CH42 J21
CH41 J21
CH40 J21
COM_HIT1
COM_HIT1*
R143
68.1
R142
68.1
CLKREF
NAQ_CLK1*
NTEST_HIT
NTEST_EN
NACQ1
NEN_LEAD
NEN_TRAIL
NCOM_START
NLD_THRESH
NCLA_MTD
NLPATY4*
MTDCLKS(23:0)
R129
68.1
R130
68.1
E27
E26
10K
RN11
GND J21
PATY5*
PATY6*
J12
J11
NHIT_DATA(31:0)
1877S/FRONT_END sheet3
NOTICE: THIS DESIGN IS THE SOLE PROPERTY OF LECROY CORP. IT CONTAINS PROPRIETARY INFORMATION AND IS FURNISHED WITH THE UNDERSTANDING THAT IT IS NOT TO BE USED, DISCLOSED OR REPRODUCED IN ANY MANNER WITHOUT THE APPROVAL OF LECROY CORPORATION
LeCroy Corp.
DRAWN BEN_M
MODIFIED 26-APR-96
SHEET 15/38
SCHEMATIC DIAGRAM
1877S
DWR NO: 1877-S1
ECO NO: 1204

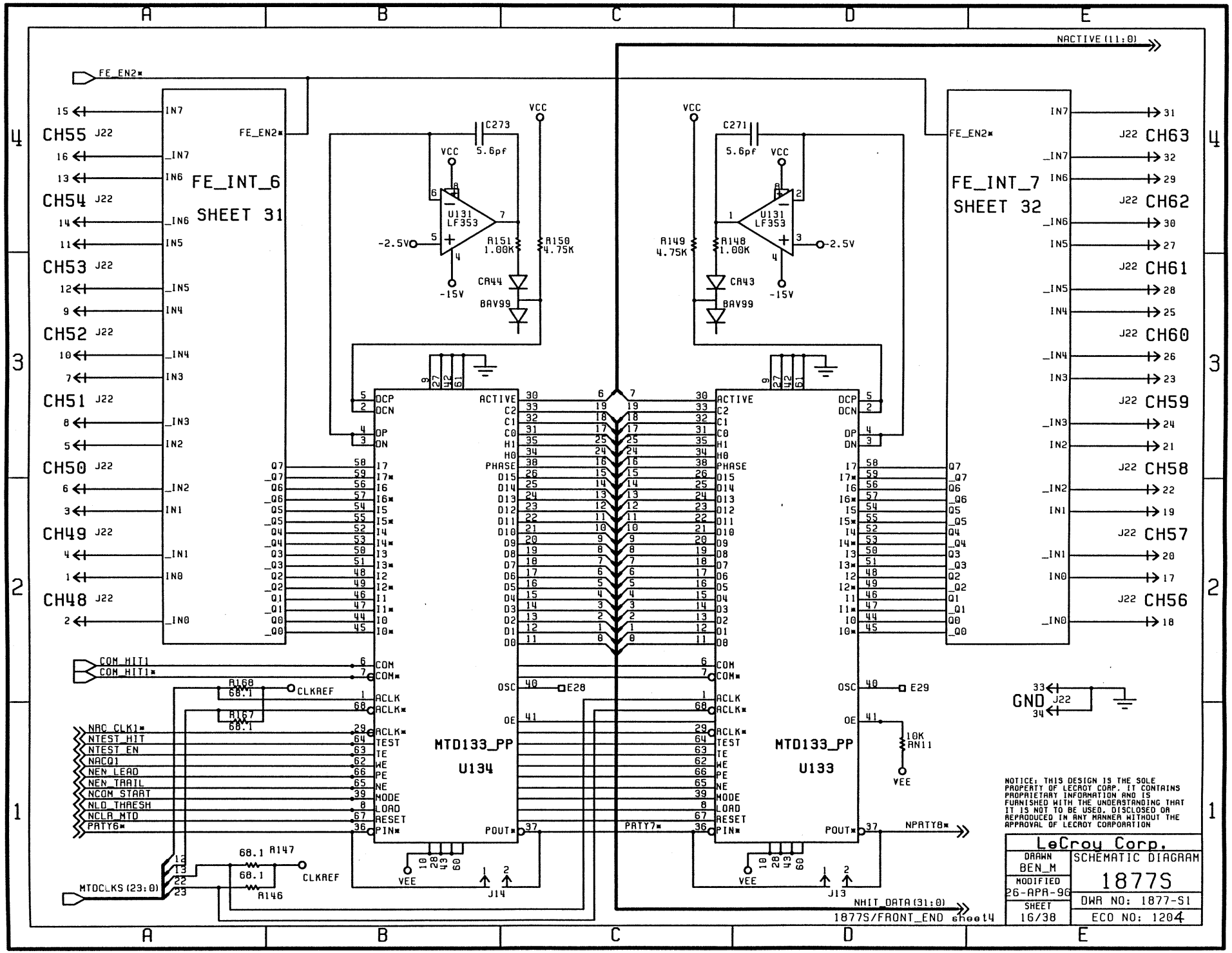

NOTICE: THIS DESIGN IS THE SOLE PROPERTY OF LECROY CORP. IT CONTAINS PROPRIETARY INFORMATION AND IS FURNISHED WITH THE UNDERSTANDING THAT IT IS NOT TO BE USED, DISCLOSED OR REPRODUCED IN ANY MANNER WITHOUT THE APPROVAL OF LECROY CORPORATION

LeCroy Corp.	
DRAWN BEN_M	SCHEMATIC DIAGRAM
MODIFIED 26-APR-96	1877S
SHEET 16/38	DWG NO: 1877-S1
	ECO NO: 1204

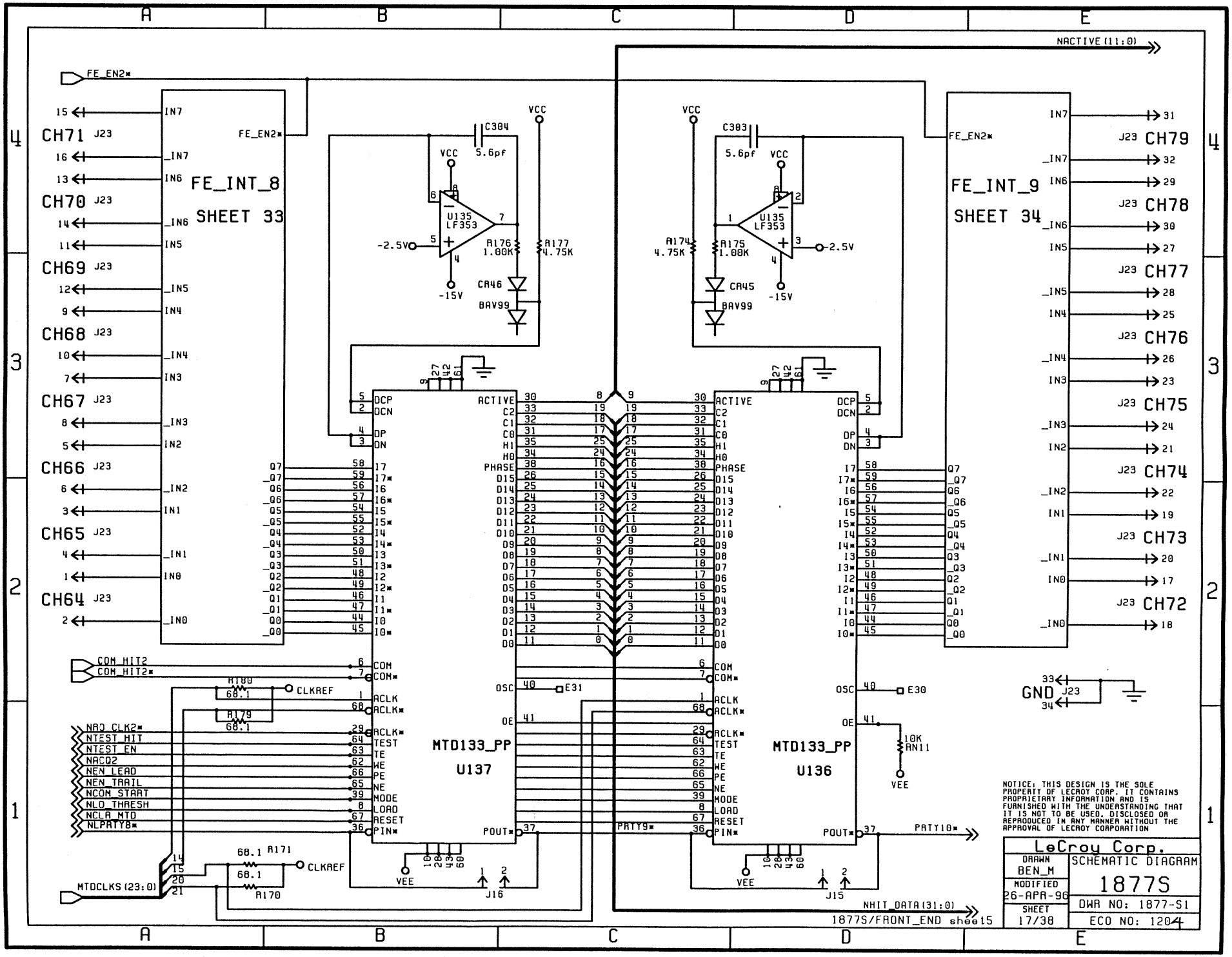
FE_INT_8
SHEET 33
FE_INT_9
SHEET 34
MTD133_PP
U137
MTD133_PP
U136
U135
LF353
C304
5.6pf
C303
5.6pf
R176
1.00K
R177
4.75K
R174
4.75K
R175
1.00K
CR46
CR45
BAV99
-2.5V
-15V
VCC
VEE
GND
NACTIVE(11:0)
NHIT_DATA(31:0)
MTDCLKS(23:0)
COM_HIT2
COM_HIT2*
CLKREF
R180
68.1
R179
68.1
R171
68.1
R170
68.1
NAQ_CLK2*
NTEST_HIT
NTEST_EN
NACQ2
NEN_LEAD
NEN_TRAIL
NCOM_START
NLO_THRESH
NCLA_MTD
NLPRTY8*
PRTY9*
PRTY10*
E31
E30
10K
RN11
J16
J15
1877S/FRONT_END sheet5
CH71 J23
CH70 J23
CH69 J23
CH68 J23
CH67 J23
CH66 J23
CH65 J23
CH64 J23
CH79 J23
CH78 J23
CH77 J23
CH76 J23
CH75 J23
CH74 J23
CH73 J23
CH72 J23
NOTICE: THIS DESIGN IS THE SOLE PROPERTY OF LECROY CORP. IT CONTAINS PROPRIETARY INFORMATION AND IS FURNISHED WITH THE UNDERSTANDING THAT IT IS NOT TO BE USED, DISCLOSED OR REPRODUCED IN ANY MANNER WITHOUT THE APPROVAL OF LECROY CORPORATION
LeCroy Corp.
DRAWN BEN_M
MODIFIED 26-APR-96
SHEET 17/38
SCHEMATIC DIAGRAM
1877S
DWG NO: 1877-S1
ECO NO: 1204

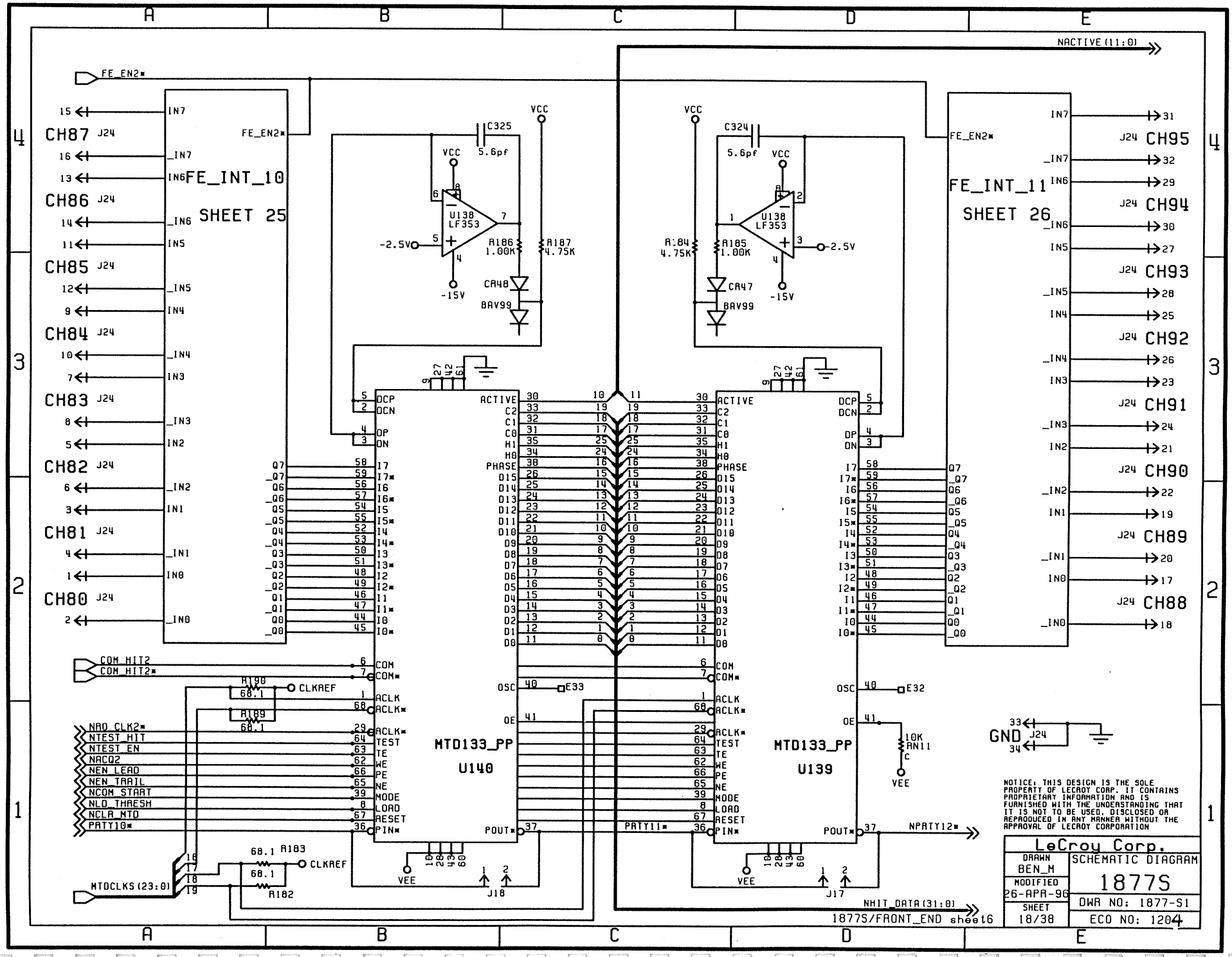
FE_INT_10
SHEET 25
FE_INT_11
SHEET 26
MTD133_PP
U140
MTD133_PP
U139
U138
LF353
C325
5.6pf
C324
5.6pf
R186
1.00K
R187
4.75K
R184
4.75K
R185
1.00K
CR48
CR47
BAV99
-2.5V
-15V
VCC
VEE
GND
NACTIVE(11:0)
NHIT_DATA(31:0)
NPRTY12*
MTDCLKS(23:0)
COM_HIT2
COM_HIT2*
CLKREF
R190
68.1
R189
68.1
R183
68.1
R182
68.1
RN11
10K
J18
J17
J24
CH87
CH86
CH85
CH84
CH83
CH82
CH81
CH80
CH95
CH94
CH93
CH92
CH91
CH90
CH89
CH88
NAO_CLK2*
NTEST_HIT
NTEST_EN
NACQ2
NEN_LEAD
NEN_TRAIL
NCOM_START
NLO_THRESH
NCLR_MTD
PRTY10*
PRTY11*
1877S/FRONT_END sheet6
NOTICE: THIS DESIGN IS THE SOLE PROPERTY OF LECROY CORP. IT CONTAINS PROPRIETARY INFORMATION AND IS FURNISHED WITH THE UNDERSTANDING THAT IT IS NOT TO BE USED, DISCLOSED OR REPRODUCED IN ANY MANNER WITHOUT THE APPROVAL OF LECROY CORPORATION
LeCroy Corp.
DRAWN BEN_M
MODIFIED 26-APR-96
SHEET 18/38
SCHEMATIC DIAGRAM
1877S
DWR NO: 1877-S1
ECO NO: 1204

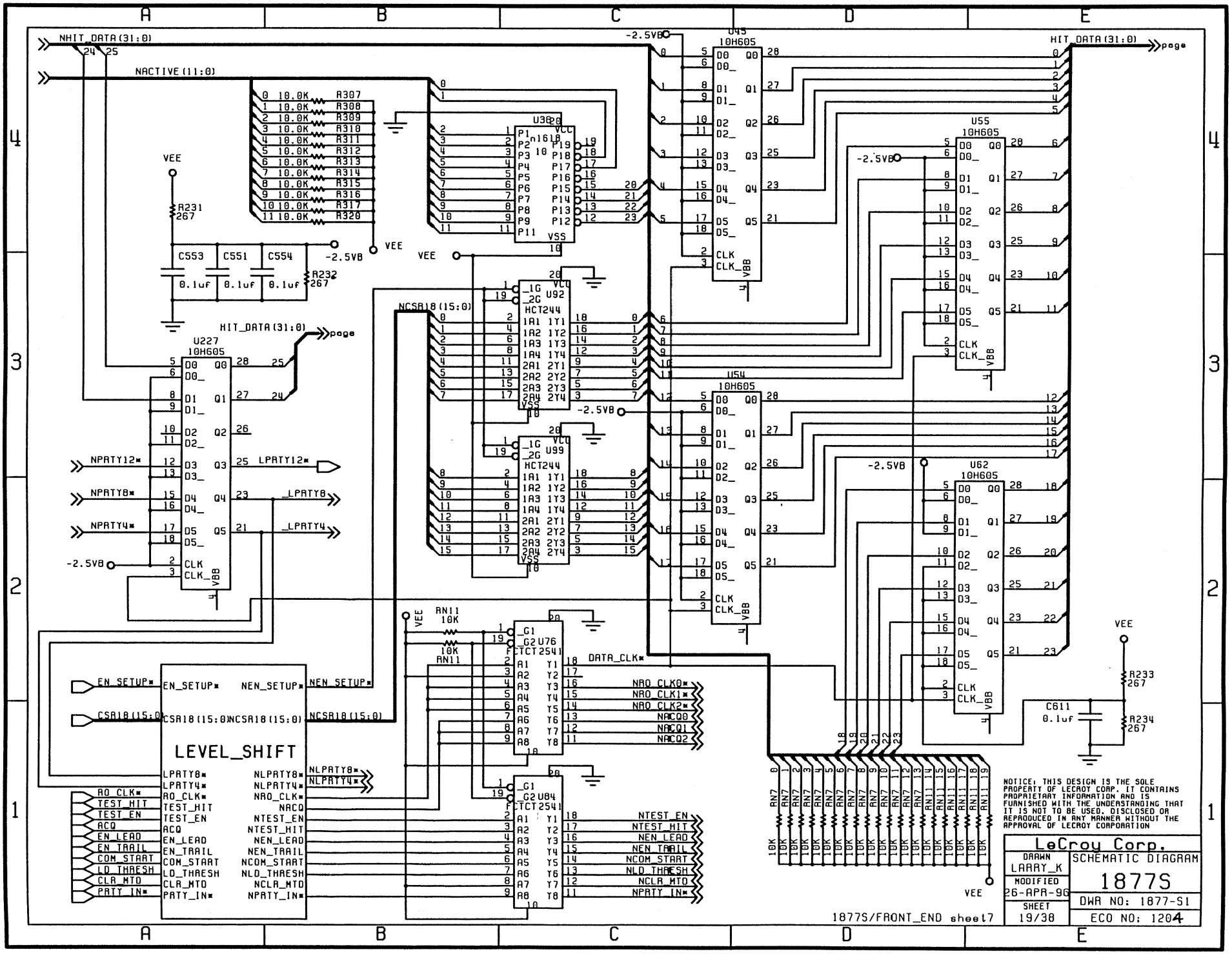
NHIT_DATA(31:0)
NACTIVE(11:0)
HIT_DATA(31:0)
page
U45
10H605
U55
10H605
U54
10H605
U62
10H605
U227
10H605
U36
n16l8
U92
HCT244
U99
HCT244
U76
FCTCT2541
U84
FCTCT2541
R307
R308
R309
R310
R311
R312
R313
R314
R315
R316
R317
R320
R231
267
R232
267
R233
267
R234
267
C553
C551
C554
0.1uf
C611
0.1uf
VEE
-2.5VB
NPRTY12*
NPRTY8*
NPRTY4*
LPRTY12*
_LPRTY8
_LPRTY4
NCSA18(15:0)
DATA_CLK*
NRO_CLK0*
NRO_CLK1*
NRO_CLK2*
NACQ0
NACQ1
NACQ2
NTEST_EN
NTEST_HIT
NEN_LEAD
NEN_TRAIL
NCOM_START
NLD_THRESH
NCLR_MTD
NPRTY_IN*
RN11
10K
RN7
LEVEL_SHIFT
EN_SETUP*
NEN_SETUP*
CSA18(15:0)
NCSA18(15:0)
NLPRTY8*
NLPRTY4*
RO_CLK*
TEST_HIT
TEST_EN
ACQ
EN_LEAD
EN_TRAIL
COM_START
LD_THRESH
CLR_MTD
PRTY_IN*
NACQ
NOTICE: THIS DESIGN IS THE SOLE PROPERTY OF LECROY CORP. IT CONTAINS PROPRIETARY INFORMATION AND IS FURNISHED WITH THE UNDERSTANDING THAT IT IS NOT TO BE USED, DISCLOSED OR REPRODUCED IN ANY MANNER WITHOUT THE APPROVAL OF LECROY CORPORATION
LeCroy Corp.
DRAWN
LARRY_K
MODIFIED
26-APR-96
SHEET
19/38
SCHEMATIC DIAGRAM
1877S
DWR NO: 1877-S1
ECO NO: 1204
1877S/FRONT_END sheet7

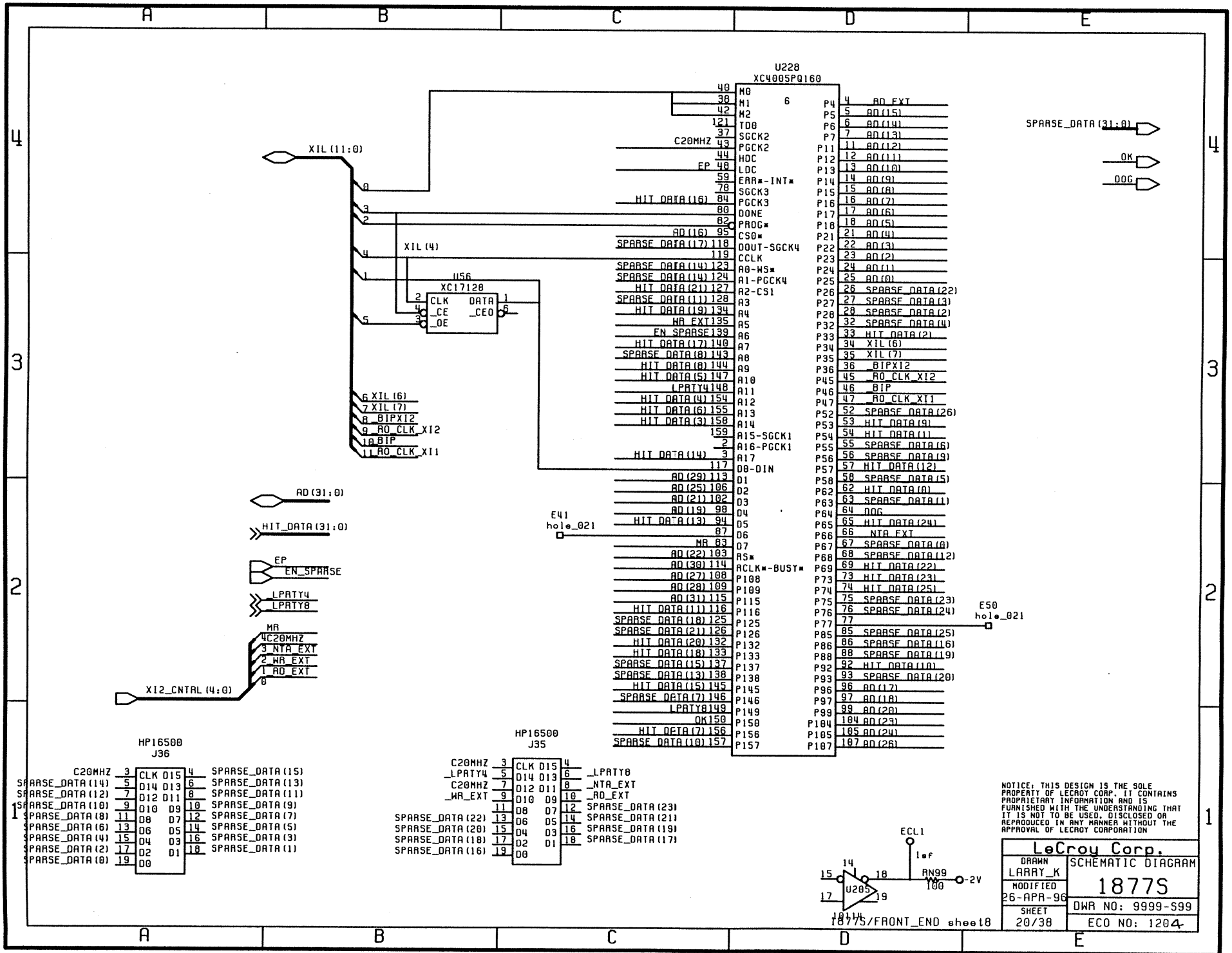
U228
XC4005PQ160
U56
XC17128
CLK
_CE
_OE
DATA
_CEO
XIL (11:0)
XIL (4)
XIL (6)
XIL (7)
_BIPXI2
_RO_CLK_XI2
_BIP
_RO_CLK_XI1
AD (31:0)
HIT_DATA (31:0)
EP
EN_SPARSE
LPATY4
LPATY8
MR
C20MHZ
_NTA_EXT
_WR_EXT
_RD_EXT
XI2_CNTRL (4:0)
E41
hole_021
E50
hole_021
SPARSE_DATA (31:0)
OK
DOG
HP16500
J36
HP16500
J35
ECL1
RN99
100
-2V
U205
1877S/FRONT_END sheet8
NOTICE: THIS DESIGN IS THE SOLE PROPERTY OF LECROY CORP. IT CONTAINS PROPRIETARY INFORMATION AND IS FURNISHED WITH THE UNDERSTANDING THAT IT IS NOT TO BE USED, DISCLOSED OR REPRODUCED IN ANY MANNER WITHOUT THE APPROVAL OF LECROY CORPORATION
LeCroy Corp.
DRAWN
LARRY_K
MODIFIED
26-APR-96
SHEET
20/38
SCHEMATIC DIAGRAM
1877S
DWR NO: 9999-S99
ECO NO: 1204

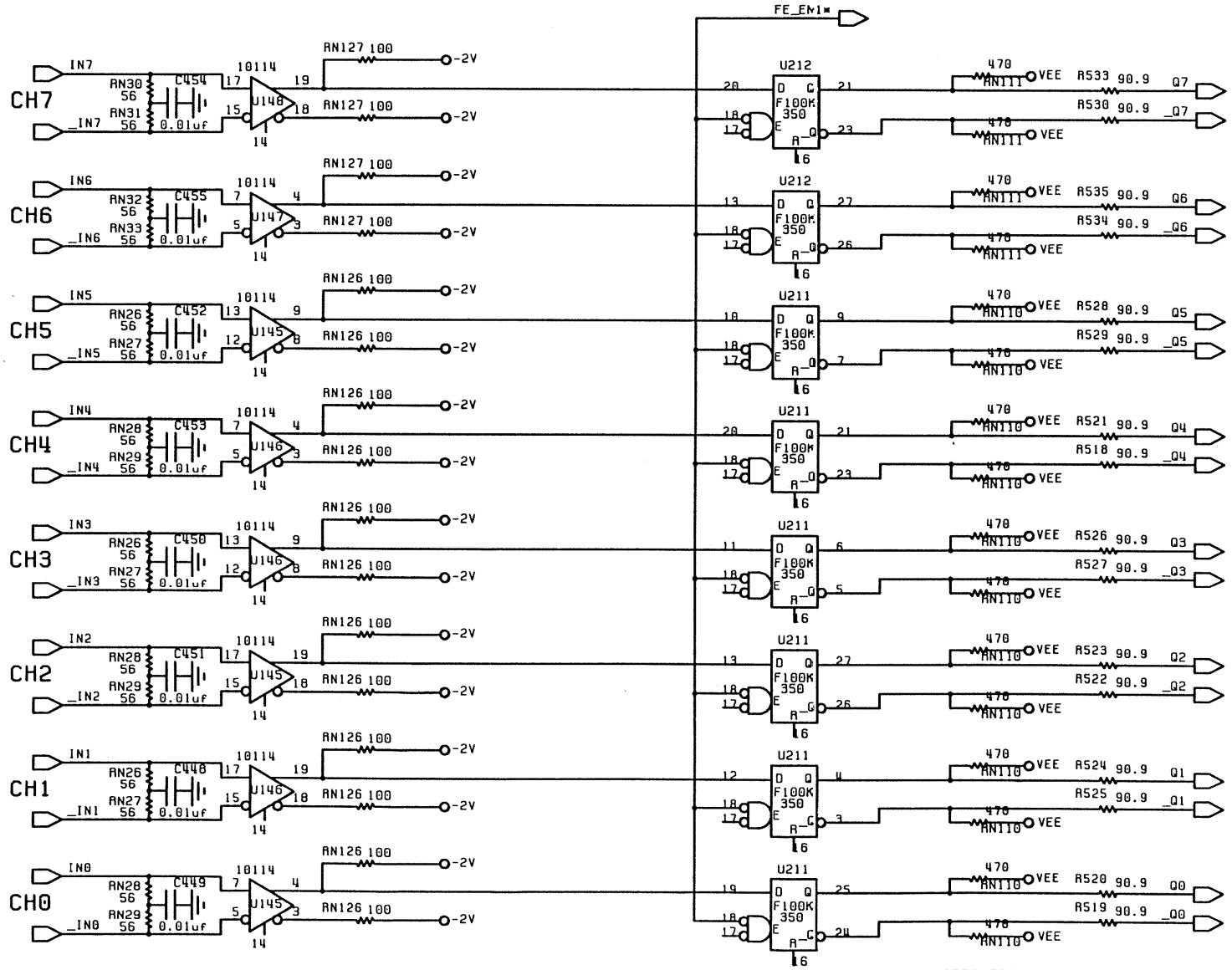

1877S/FRONT_END/FE_INT_0 sheet1

NOTICE: THIS DESIGN IS THE SOLE PROPERTY OF LECROY CORP. IT CONTAINS PROPRIETARY INFORMATION AND IS FURNISHED WITH THE UNDERSTANDING THAT IT IS NOT TO BE USED, DISCLOSED OR REPRODUCED IN ANY MANNER WITHOUT THE APPROVAL OF LECROY CORPORATION

LeCroy Corp.	
DRAWN BEN_M	SCHEMATIC DIAGRAM
MODIFIED 26-APR-96	1877S
SHEET 21/38	DWR NO: 1877-S1
	ECO NO: 1204

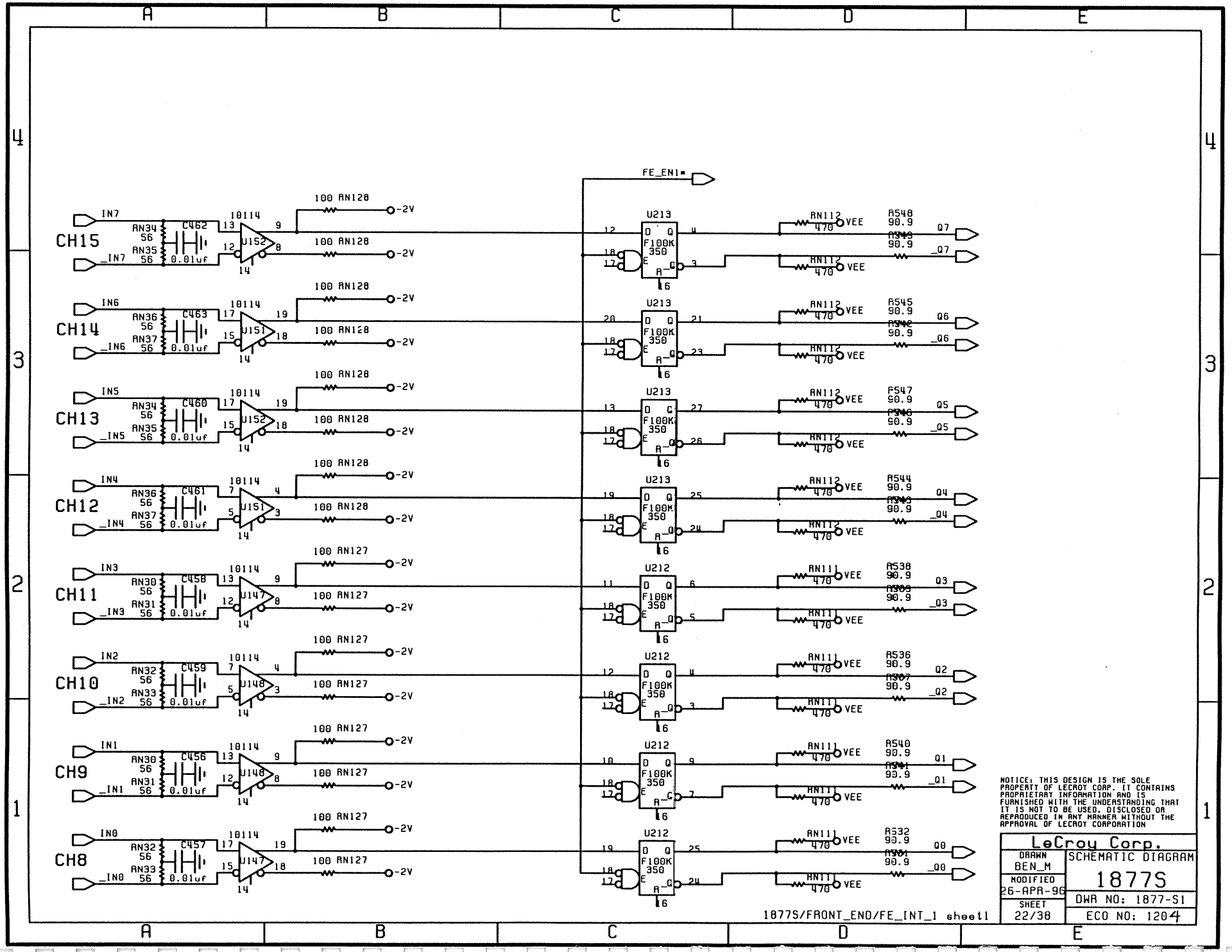

NOTICE: THIS DESIGN IS THE SOLE PROPERTY OF LECROY CORP. IT CONTAINS PROPRIETARY INFORMATION AND IS FURNISHED WITH THE UNDERSTANDING THAT IT IS NOT TO BE USED, DISCLOSED OR REPRODUCED IN ANY MANNER WITHOUT THE APPROVAL OF LECROY CORPORATION

LeCroy Corp.	
DRAWN BEN_M	SCHEMATIC DIAGRAM
MODIFIED 26-APR-96	1877S
SHEET 22/38	DWR NO: 1877-S1
	ECO NO: 1204

1877S/FRONT_END/FE_INT_1 sheet1

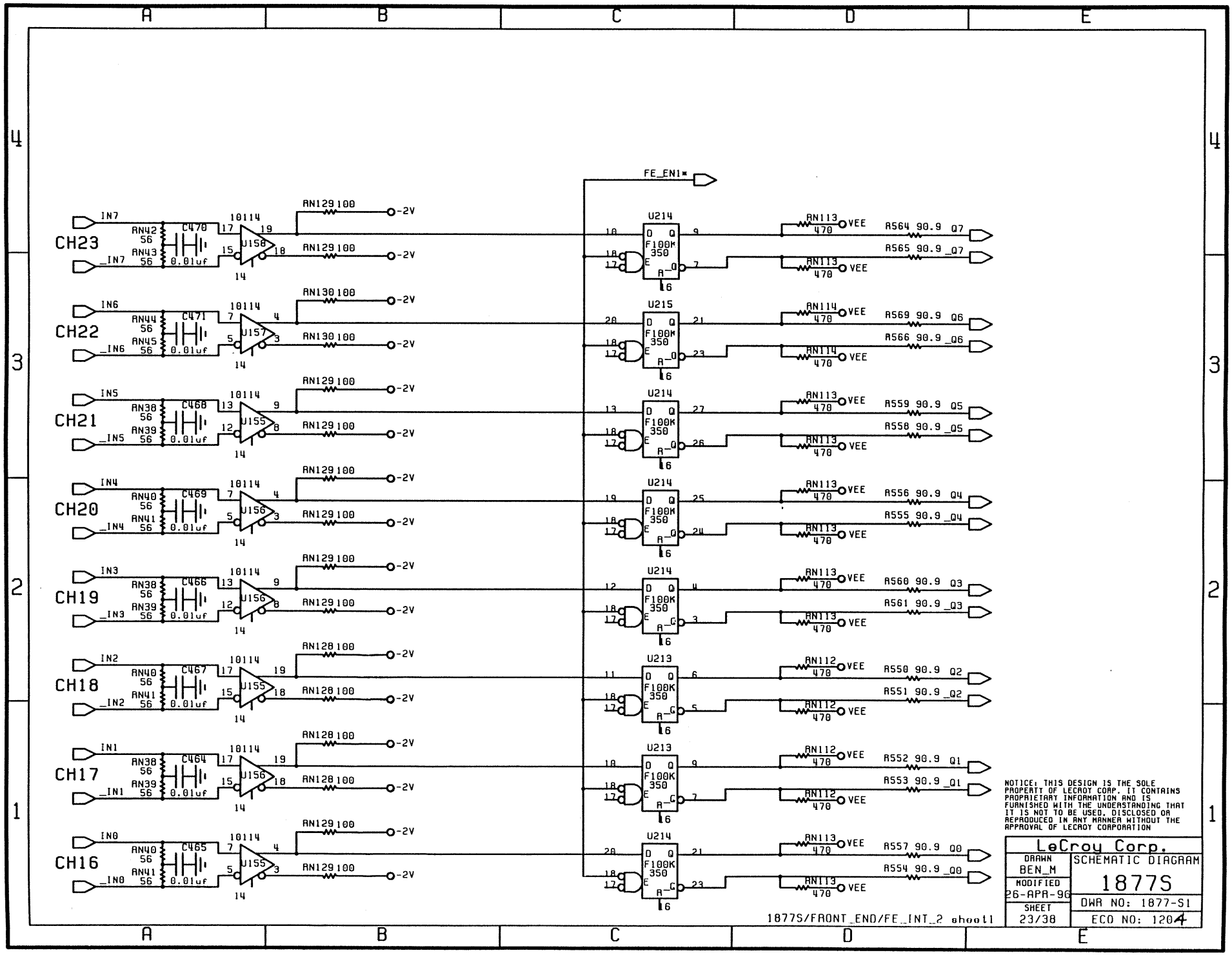

NOTICE: THIS DESIGN IS THE SOLE PROPERTY OF LECROY CORP. IT CONTAINS PROPRIETARY INFORMATION AND IS FURNISHED WITH THE UNDERSTANDING THAT IT IS NOT TO BE USED, DISCLOSED OR REPRODUCED IN ANY MANNER WITHOUT THE APPROVAL OF LECROY CORPORATION

LeCroy Corp.	
DRAWN BEN_M	SCHEMATIC DIAGRAM
MODIFIED 26-APR-96	1877S
SHEET 23/38	DWR NO: 1877-S1
	ECO NO: 1204

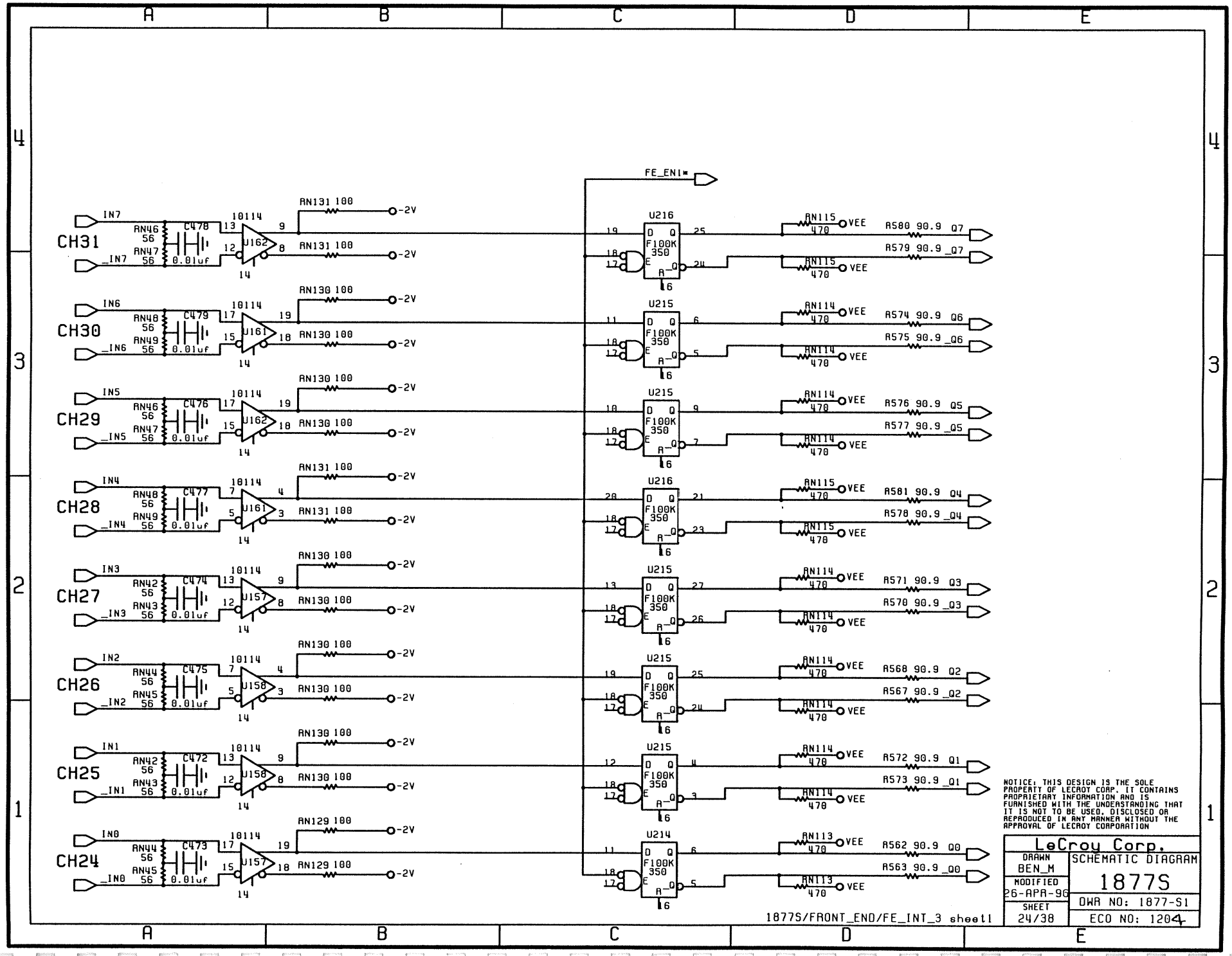

NOTICE: THIS DESIGN IS THE SOLE PROPERTY OF LECROY CORP. IT CONTAINS PROPRIETARY INFORMATION AND IS FURNISHED WITH THE UNDERSTANDING THAT IT IS NOT TO BE USED, DISCLOSED OR REPRODUCED IN ANY MANNER WITHOUT THE APPROVAL OF LECROY CORPORATION

LeCroy Corp.

DRAWN BEN_M	SCHEMATIC DIAGRAM
MODIFIED 26-APR-90	1877S
SHEET 24/38	DWR NO: 1877-S1
	ECO NO: 1204

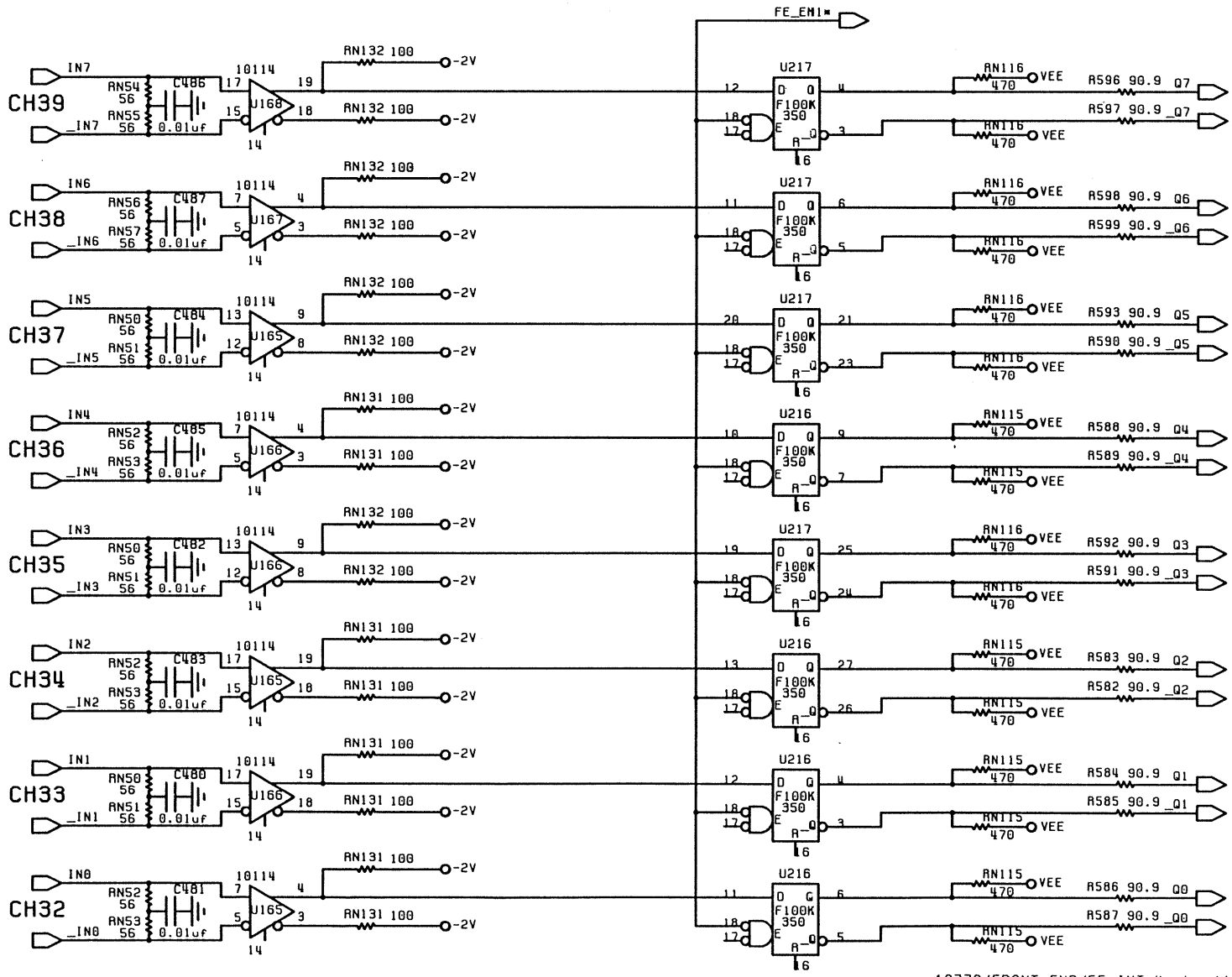

1877S/FRONT_END/FE_INT_4 sheet1

NOTICE: THIS DESIGN IS THE SOLE PROPERTY OF LECROY CORP. IT CONTAINS PROPRIETARY INFORMATION AND IS FURNISHED WITH THE UNDERSTANDING THAT IT IS NOT TO BE USED, DISCLOSED OR REPRODUCED IN ANY MANNER WITHOUT THE APPROVAL OF LECROY CORPORATION

LeCroy Corp.	
DRAWN BEN_M	SCHEMATIC DIAGRAM
MODIFIED 26-APR-96	1877S
SHEET 25/38	DWG NO: 1877-S1
	ECO NO: 1204

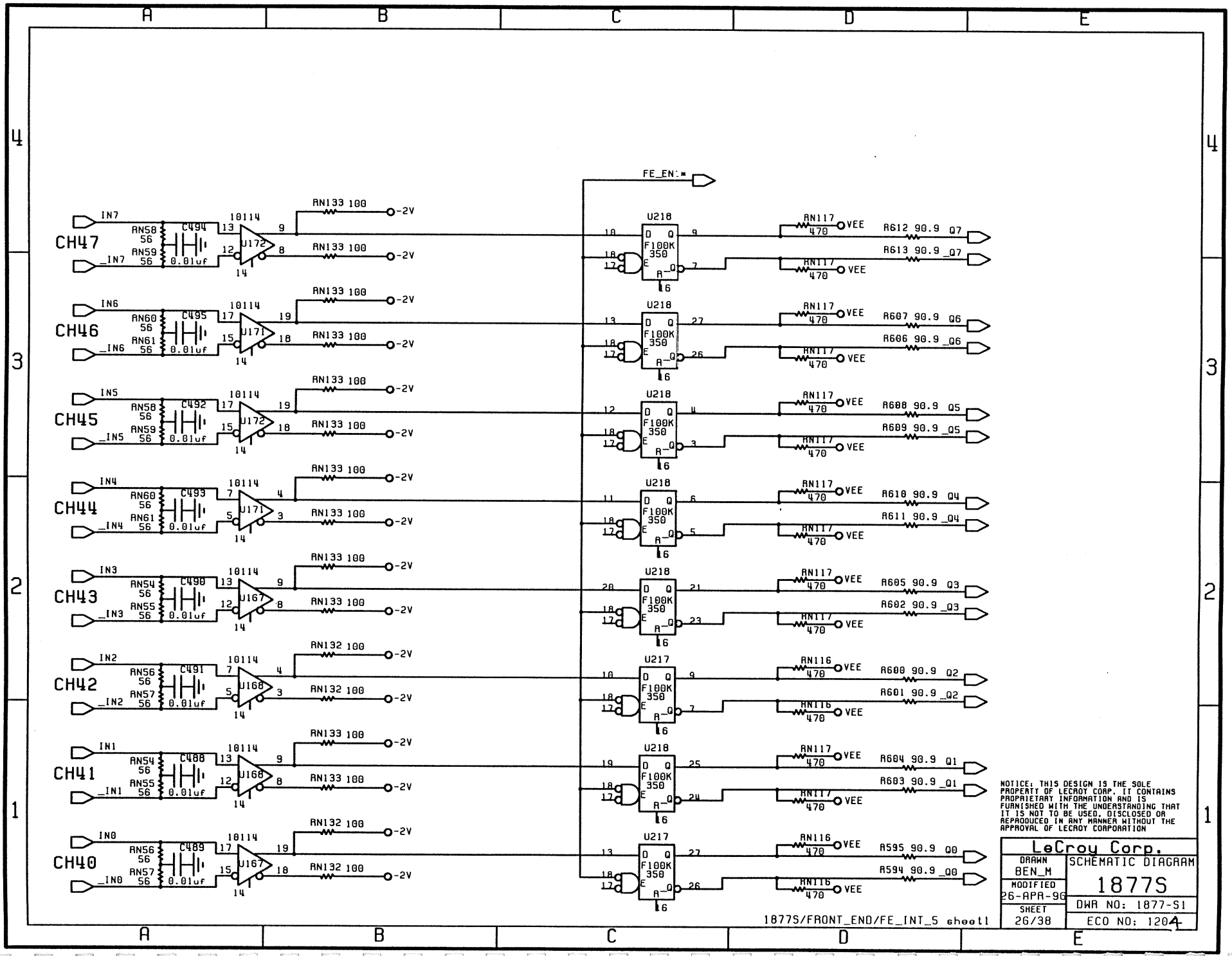

NOTICE: THIS DESIGN IS THE SOLE PROPERTY OF LECROY CORP. IT CONTAINS PROPRIETARY INFORMATION AND IS FURNISHED WITH THE UNDERSTANDING THAT IT IS NOT TO BE USED, DISCLOSED OR REPRODUCED IN ANY MANNER WITHOUT THE APPROVAL OF LECROY CORPORATION

LeCroy Corp.	
DRAWN BEN_M	SCHEMATIC DIAGRAM
MODIFIED 26-APR-90	1877S
SHEET 26/38	DWG NO: 1877-S1
	ECO NO: 1204

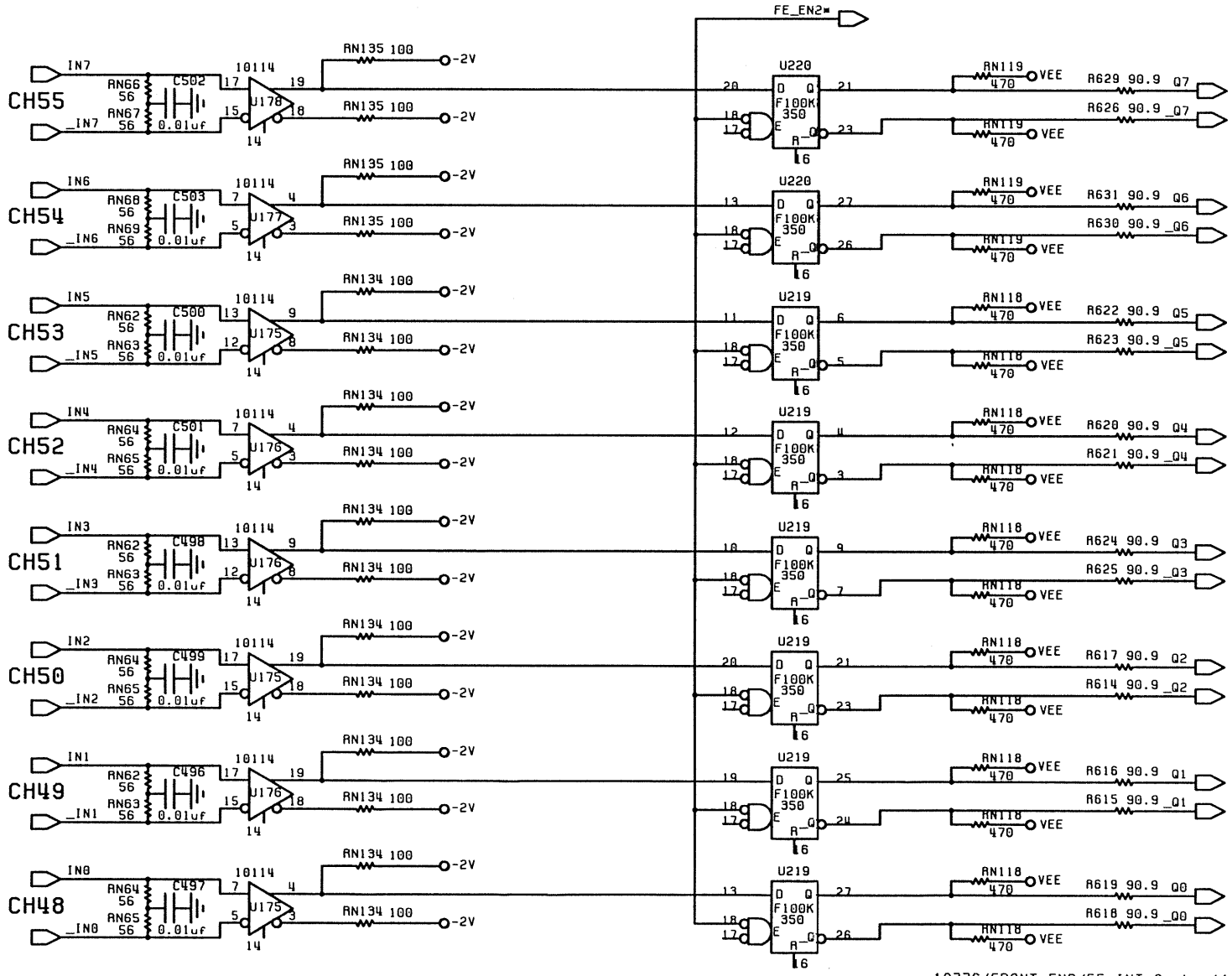

1877S/FRONT_END/FE_INT_6 sheet1

NOTICE: THIS DESIGN IS THE SOLE PROPERTY OF LECROY CORP. IT CONTAINS PROPRIETARY INFORMATION AND IS FURNISHED WITH THE UNDERSTANDING THAT IT IS NOT TO BE USED, DISCLOSED OR REPRODUCED IN ANY MANNER WITHOUT THE APPROVAL OF LECROY CORPORATION

LeCroy Corp.	
DRAWN BEN_M	SCHEMATIC DIAGRAM
MODIFIED 26-APR-96	1877S
SHEET 27/38	DWA NO: 1877-S1
	ECO NO: 1204

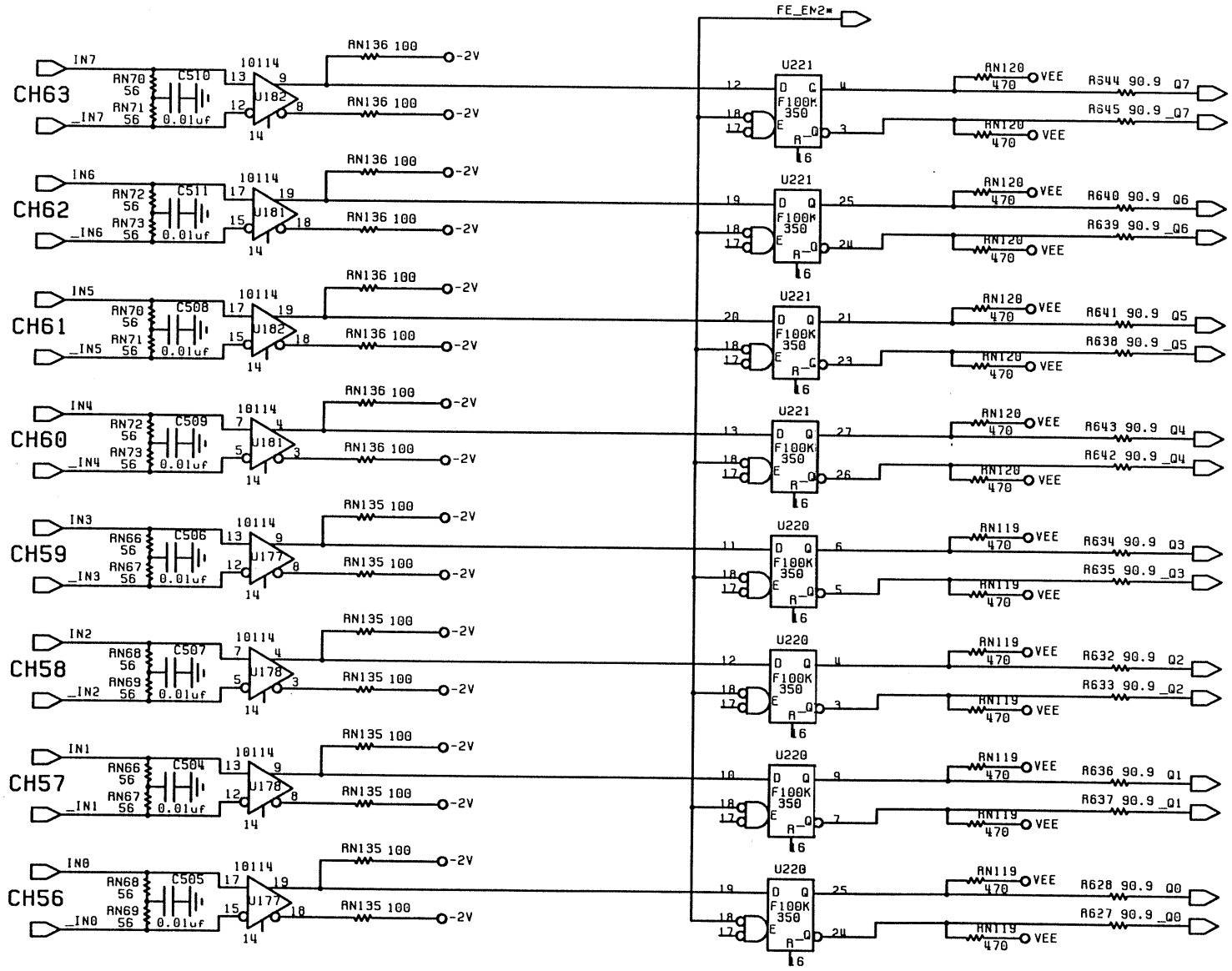

1877S/FRONT_END/FE_INT_7 sheet1

NOTICE: THIS DESIGN IS THE SOLE PROPERTY OF LECROY CORP. IT CONTAINS PROPRIETARY INFORMATION AND IS FURNISHED WITH THE UNDERSTANDING THAT IT IS NOT TO BE USED, DISCLOSED OR REPRODUCED IN ANY MANNER WITHOUT THE APPROVAL OF LECROY CORPORATION

LeCroy Corp.	
DRAWN BEN_M	SCHEMATIC DIAGRAM
MODIFIED 26-APR-96	1877S
SHEET 28/38	DWR NO: 1877-S1
	ECO NO: 1204

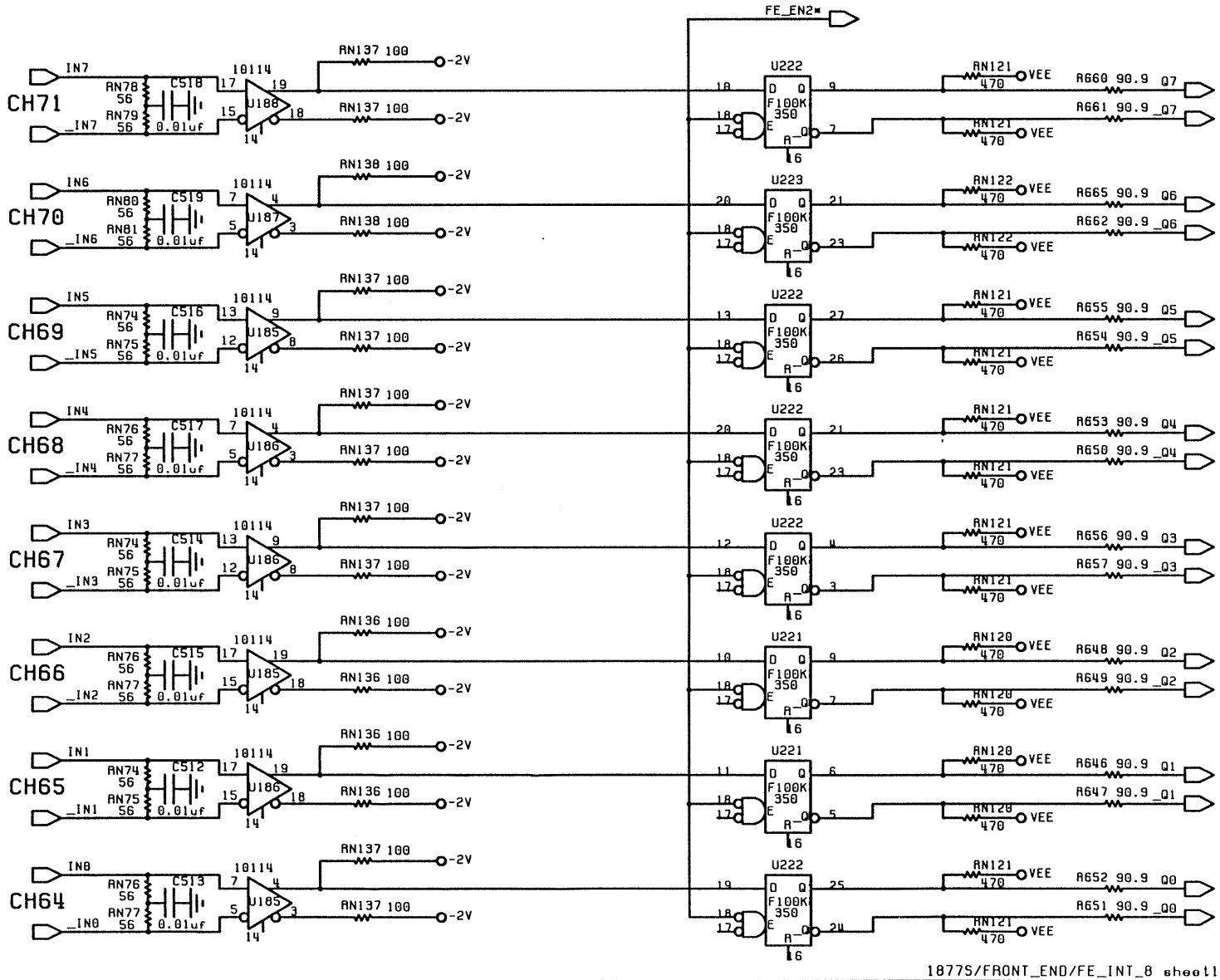

1877S/FRONT_END/FE_INT_8 sheet1

NOTICE: THIS DESIGN IS THE SOLE PROPERTY OF LECROY CORP. IT CONTAINS PROPRIETARY INFORMATION AND IS FURNISHED WITH THE UNDERSTANDING THAT IT IS NOT TO BE USED, DISCLOSED OR REPRODUCED IN ANY MANNER WITHOUT THE APPROVAL OF LECROY CORPORATION

LeCroy Corp.	
DRAWN BEN_M	SCHEMATIC DIAGRAM
MODIFIED 26-APR-96	1877S
SHEET 29/38	DWR NO: 1877-S1
	ECO NO: 1204

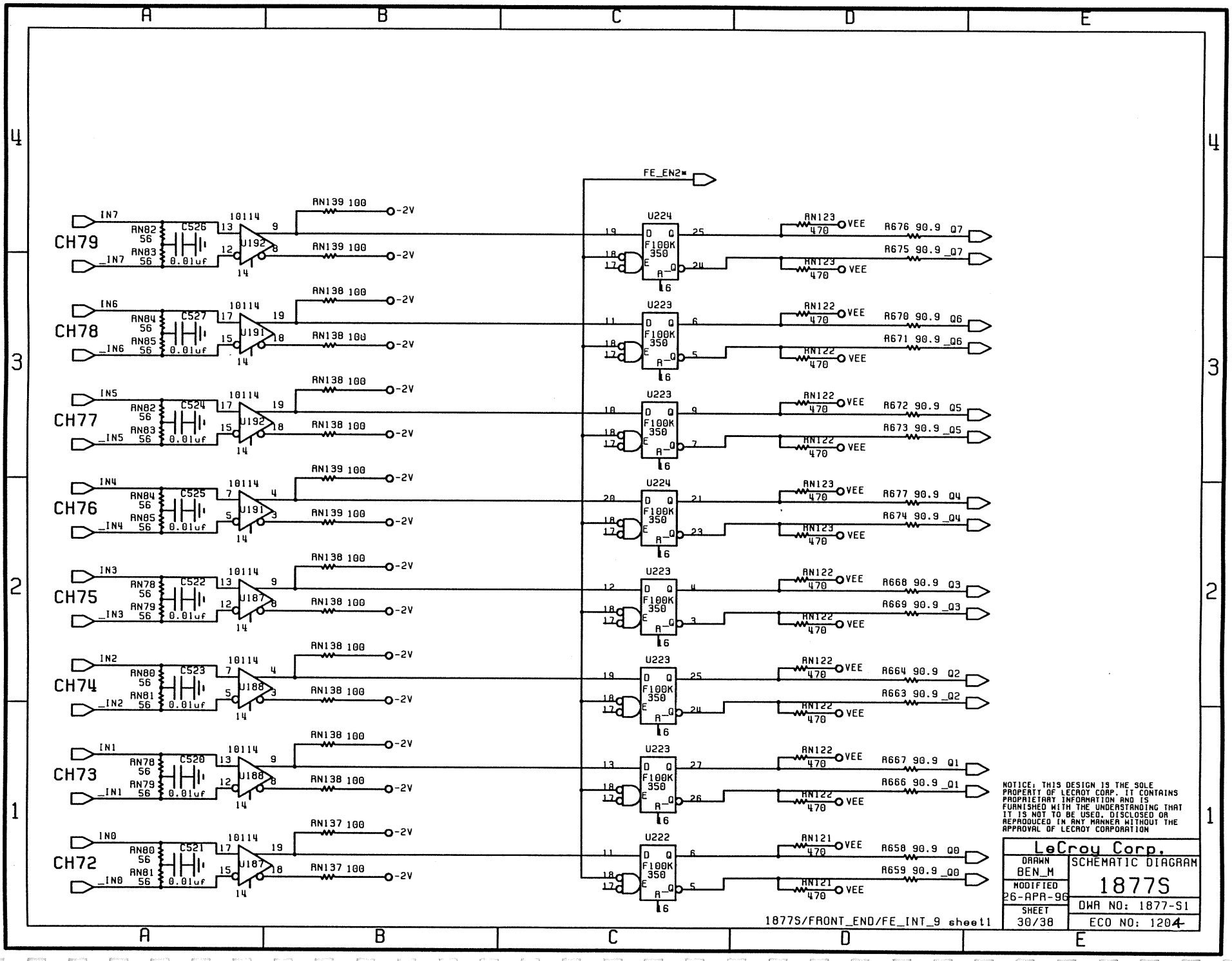

NOTICE: THIS DESIGN IS THE SOLE PROPERTY OF LECROY CORP. IT CONTAINS PROPRIETARY INFORMATION AND IS FURNISHED WITH THE UNDERSTANDING THAT IT IS NOT TO BE USED, DISCLOSED OR REPRODUCED IN ANY MANNER WITHOUT THE APPROVAL OF LECROY CORPORATION

LeCroy Corp.	
DRAWN BEN_M	SCHEMATIC DIAGRAM
MODIFIED 26-APR-96	1877S
SHEET 30/38	DWG NO: 1877-S1
	ECO NO: 1204

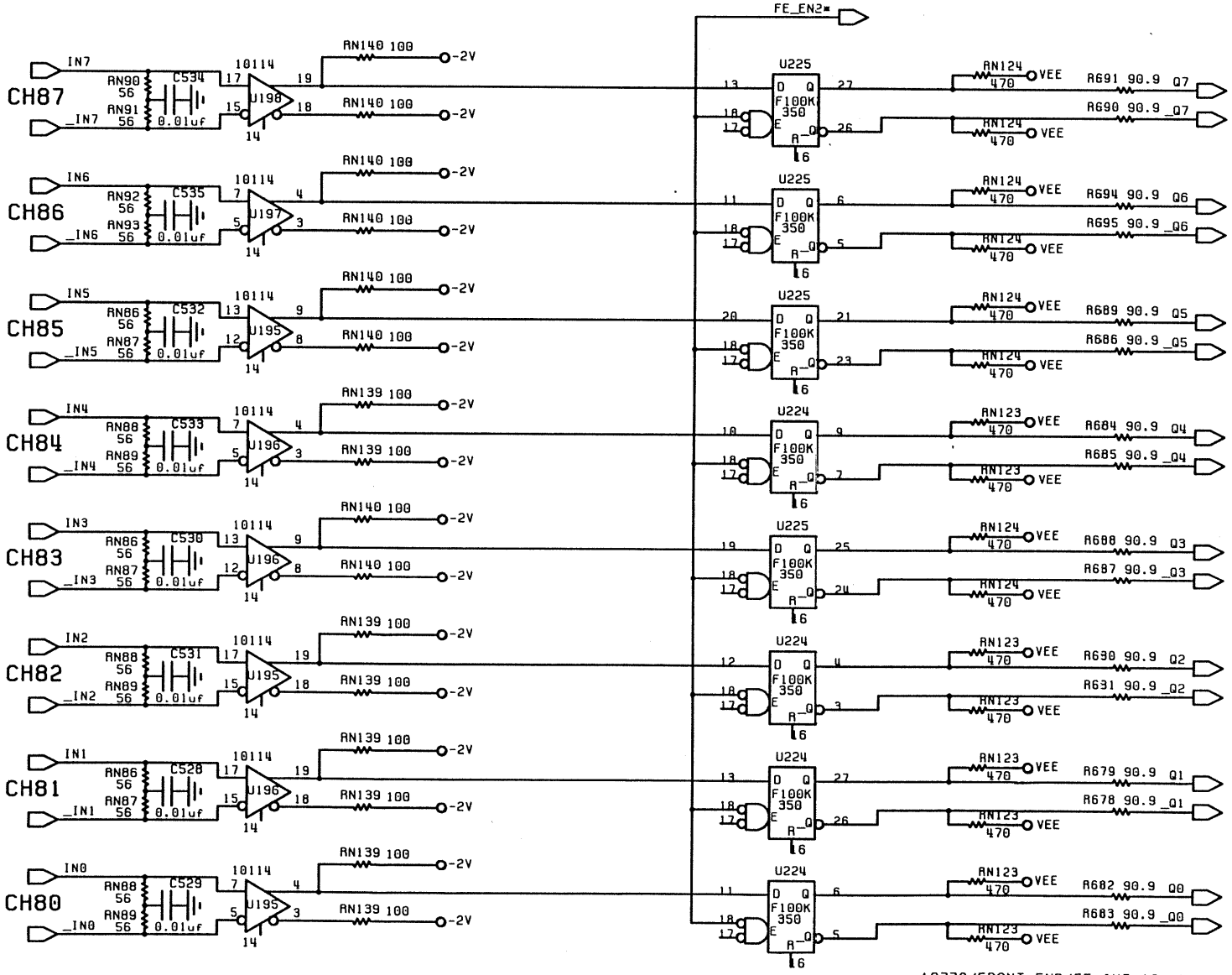

NOTICE: THIS DESIGN IS THE SOLE PROPERTY OF LECROY CORP. IT CONTAINS PROPRIETARY INFORMATION AND IS FURNISHED WITH THE UNDERSTANDING THAT IT IS NOT TO BE USED, DISCLOSED OR REPRODUCED IN ANY MANNER WITHOUT THE APPROVAL OF LECROY CORPORATION

LeCroy Corp.	
DRAWN BEN_M	SCHEMATIC DIAGRAM
MODIFIED 26-APR-96	1877S
SHEET 31/38	DWR NO: 1877-S1
	ECO NO: 1204

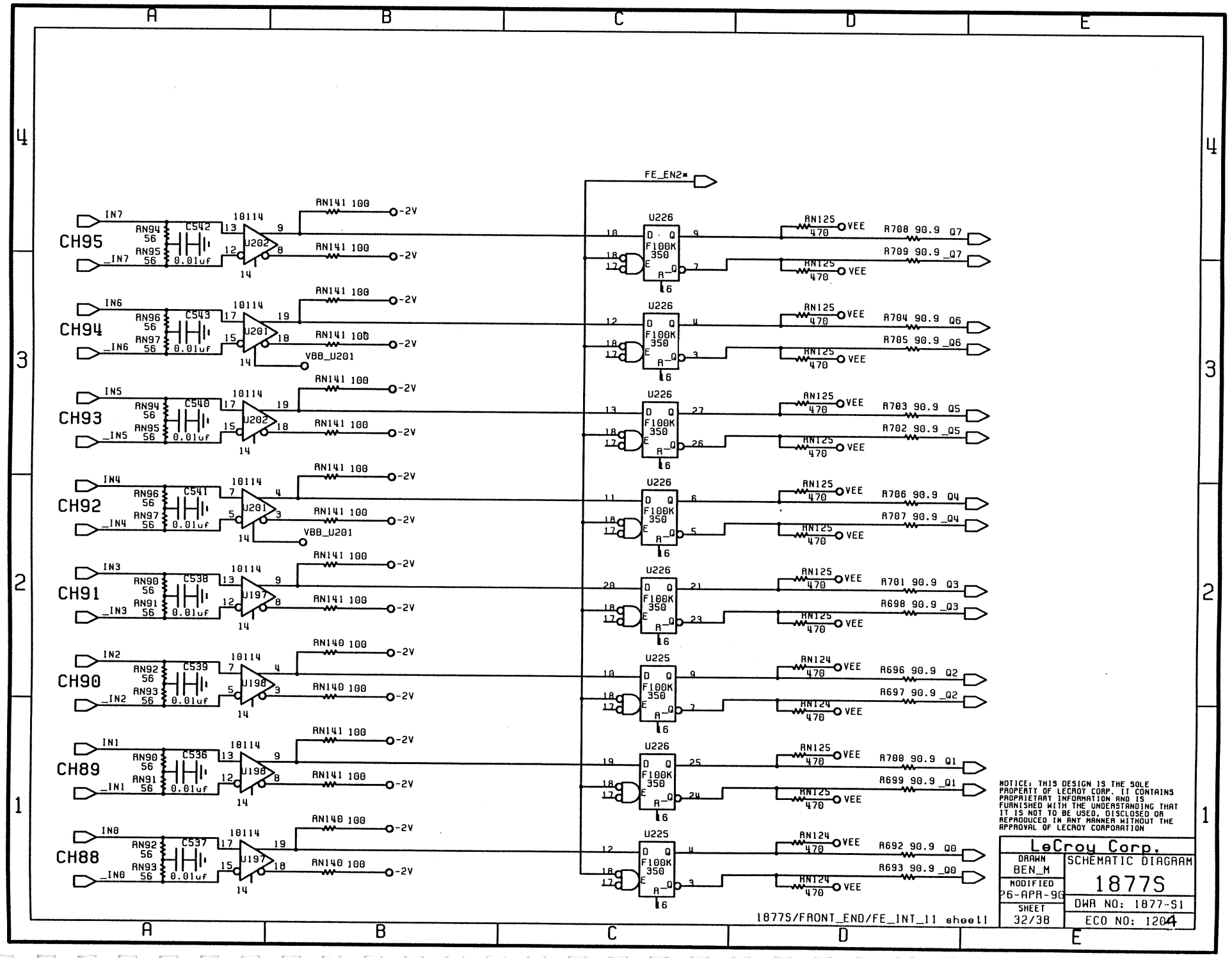
FE_EN2*
CH95
IN7
_IN7
RN94 56
RN95 56
C542 0.01uf
10114
U202
RN141 100
-2V
CH94
IN6
_IN6
RN96 56
RN97 56
C543 0.01uf
U201
VBB_U201
CH93
IN5
_IN5
RN94 56
RN95 56
C540 0.01uf
CH92
IN4
_IN4
RN96 56
RN97 56
C541 0.01uf
CH91
IN3
_IN3
RN90 56
RN91 56
C538 0.01uf
U197
CH90
IN2
_IN2
RN92 56
RN93 56
C539 0.01uf
U198
RN140 100
CH89
IN1
_IN1
RN90 56
RN91 56
C536 0.01uf
CH88
IN0
_IN0
RN92 56
RN93 56
C537 0.01uf
U226
U225
F100K 350
D Q
E
R
RN125 470
RN124 470
VEE
R708 90.9 Q7
R709 90.9 _Q7
R704 90.9 Q6
R705 90.9 _Q6
R703 90.9 Q5
R702 90.9 _Q5
R706 90.9 Q4
R707 90.9 _Q4
R701 90.9 Q3
R698 90.9 _Q3
R696 90.9 Q2
R697 90.9 _Q2
R700 90.9 Q1
R699 90.9 _Q1
R692 90.9 Q0
R693 90.9 _Q0
1877S/FRONT_END/FE_INT_11 sheet1
NOTICE: THIS DESIGN IS THE SOLE PROPERTY OF LECROY CORP. IT CONTAINS PROPRIETARY INFORMATION AND IS FURNISHED WITH THE UNDERSTANDING THAT IT IS NOT TO BE USED, DISCLOSED OR REPRODUCED IN ANY MANNER WITHOUT THE APPROVAL OF LECROY CORPORATION
LeCroy Corp.
DRAWN BEN_M
MODIFIED 26-APR-90
SHEET 32/38
SCHEMATIC DIAGRAM
1877S
DWR NO: 1877-S1
ECO NO: 1204

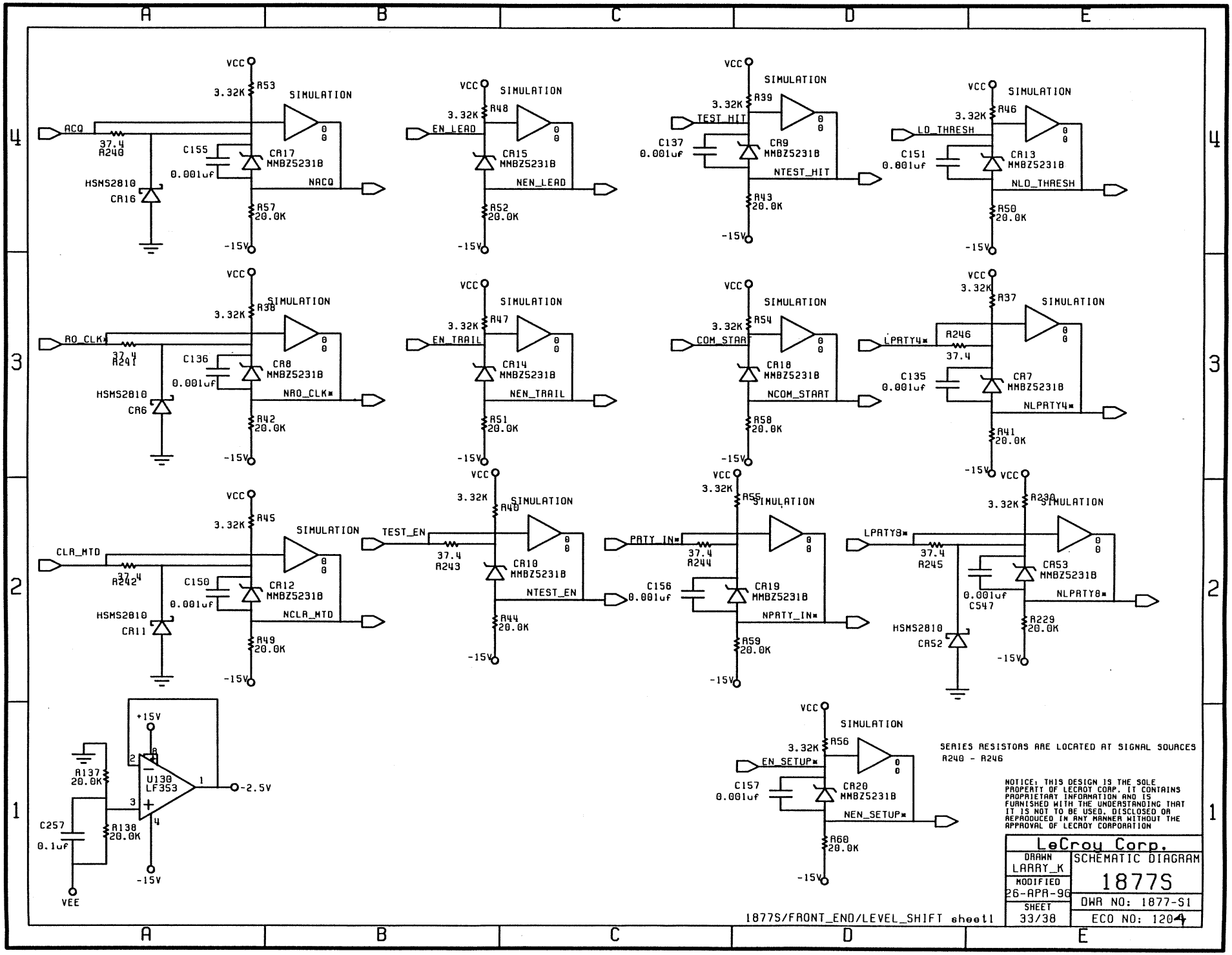
ACQ
37.4 R240
HSMS2810 CR16
C155 0.001uf
CR17 MMBZ5231B
VCC 3.32K R53
SIMULATION
NACQ
R57 20.0K
-15V
EN_LEAD
R48
CR15 MMBZ5231B
NEN_LEAD
R52 20.0K
TEST_HIT
C137 0.001uf
R39
CR9 MMBZ5231B
NTEST_HIT
R43 20.0K
LD_THRESH
C151 0.001uf
R46
CR13 MMBZ5231B
NLD_THRESH
R50 20.0K
RO_CLK*
37.4 R241
HSMS2810 CR6
C136 0.001uf
R38
CR8 MMBZ5231B
NRO_CLK*
R42 20.0K
EN_TRAIL
R47
CR14 MMBZ5231B
NEN_TRAIL
R51 20.0K
COM_START
R54
CR18 MMBZ5231B
NCOM_START
R58 20.0K
LPRTY4*
R246 37.4
C135 0.001uf
R37
CR7 MMBZ5231B
NLPRTY4*
R41 20.0K
CLR_MTD
37.4 R242
HSMS2810 CR11
C150 0.001uf
R45
CR12 MMBZ5231B
NCLR_MTD
R49 20.0K
TEST_EN
37.4 R243
R40
CR10 MMBZ5231B
NTEST_EN
R44 20.0K
PRTY_IN*
37.4 R244
C156 0.001uf
R55
CR19 MMBZ5231B
NPRTY_IN*
R59 20.0K
LPRTY8*
37.4 R245
HSMS2810 CR52
C547 0.001uf
R230
CR53 MMBZ5231B
NLPRTY8*
R229 20.0K
+15V
U130 LF353
-2.5V
R137 20.0K
C257 0.1uf
R138 20.0K
VEE
EN_SETUP*
C157 0.001uf
R56
CR20 MMBZ5231B
NEN_SETUP*
R60 20.0K
SERIES RESISTORS ARE LOCATED AT SIGNAL SOURCES
R240 - R246
NOTICE: THIS DESIGN IS THE SOLE PROPERTY OF LECROY CORP. IT CONTAINS PROPRIETARY INFORMATION AND IS FURNISHED WITH THE UNDERSTANDING THAT IT IS NOT TO BE USED, DISCLOSED OR REPRODUCED IN ANY MANNER WITHOUT THE APPROVAL OF LECROY CORPORATION
LeCroy Corp.
DRAWN LARRY_K
SCHEMATIC DIAGRAM
MODIFIED 26-APR-96
1877S
SHEET 33/38
DWR NO: 1877-S1
ECO NO: 1204
1877S/FRONT_END/LEVEL_SHIFT sheet1

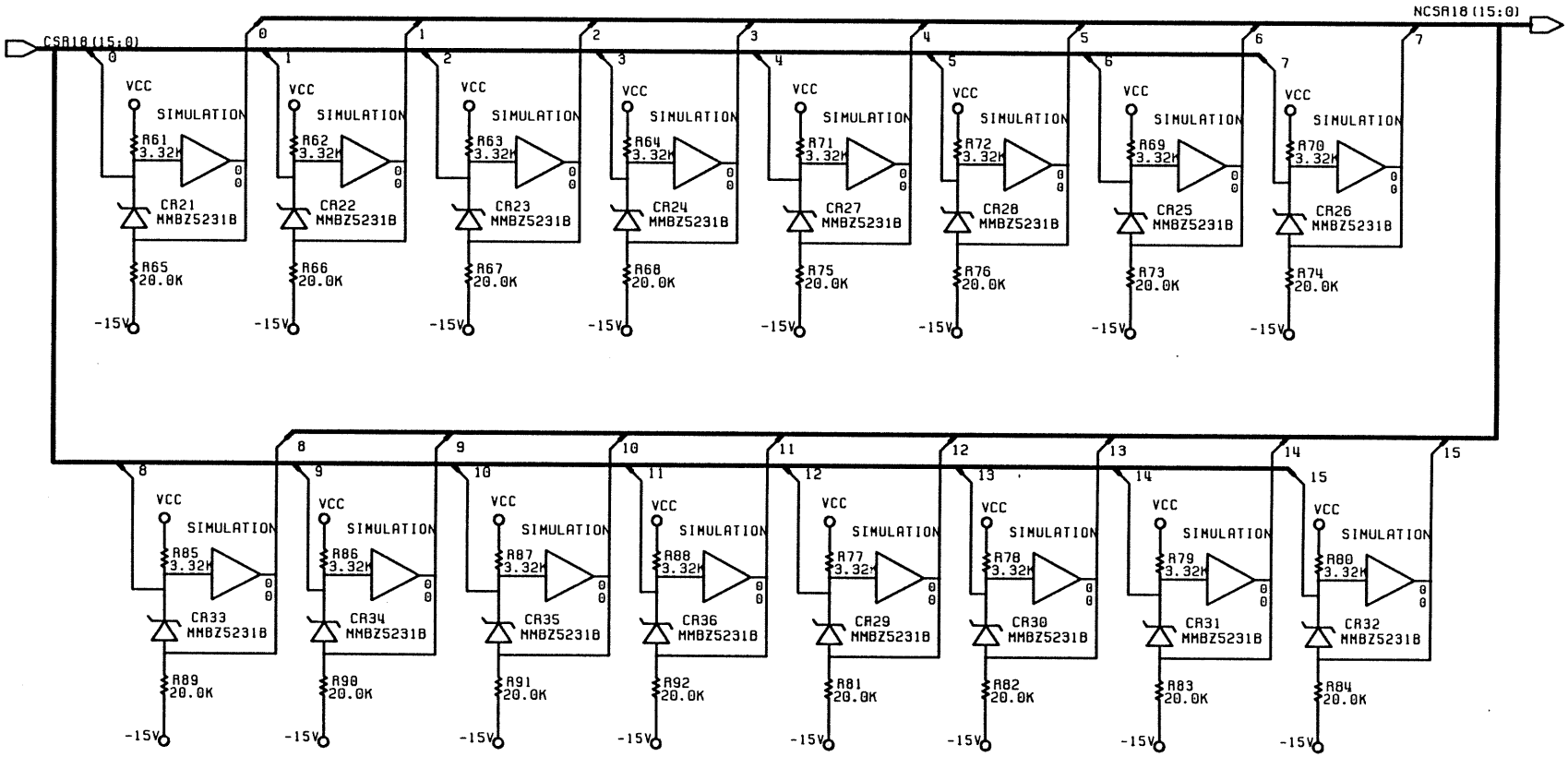

NOTICE: THIS DESIGN IS THE SOLE PROPERTY OF LECROY CORP. IT CONTAINS PROPRIETARY INFORMATION AND IS FURNISHED WITH THE UNDERSTANDING THAT IT IS NOT TO BE USED, DISCLOSED OR REPRODUCED IN ANY MANNER WITHOUT THE APPROVAL OF LECROY CORPORATION

LeCroy Corp.	
DRAWN LARRY_K	SCHEMATIC DIAGRAM
MODIFIED 26-APR-96	1877S
SHEET 34/38	DWG NO: 1877-S1
	ECO NO: 1204

1877S/FRONT_END/LEVEL_SHIFT sheet2

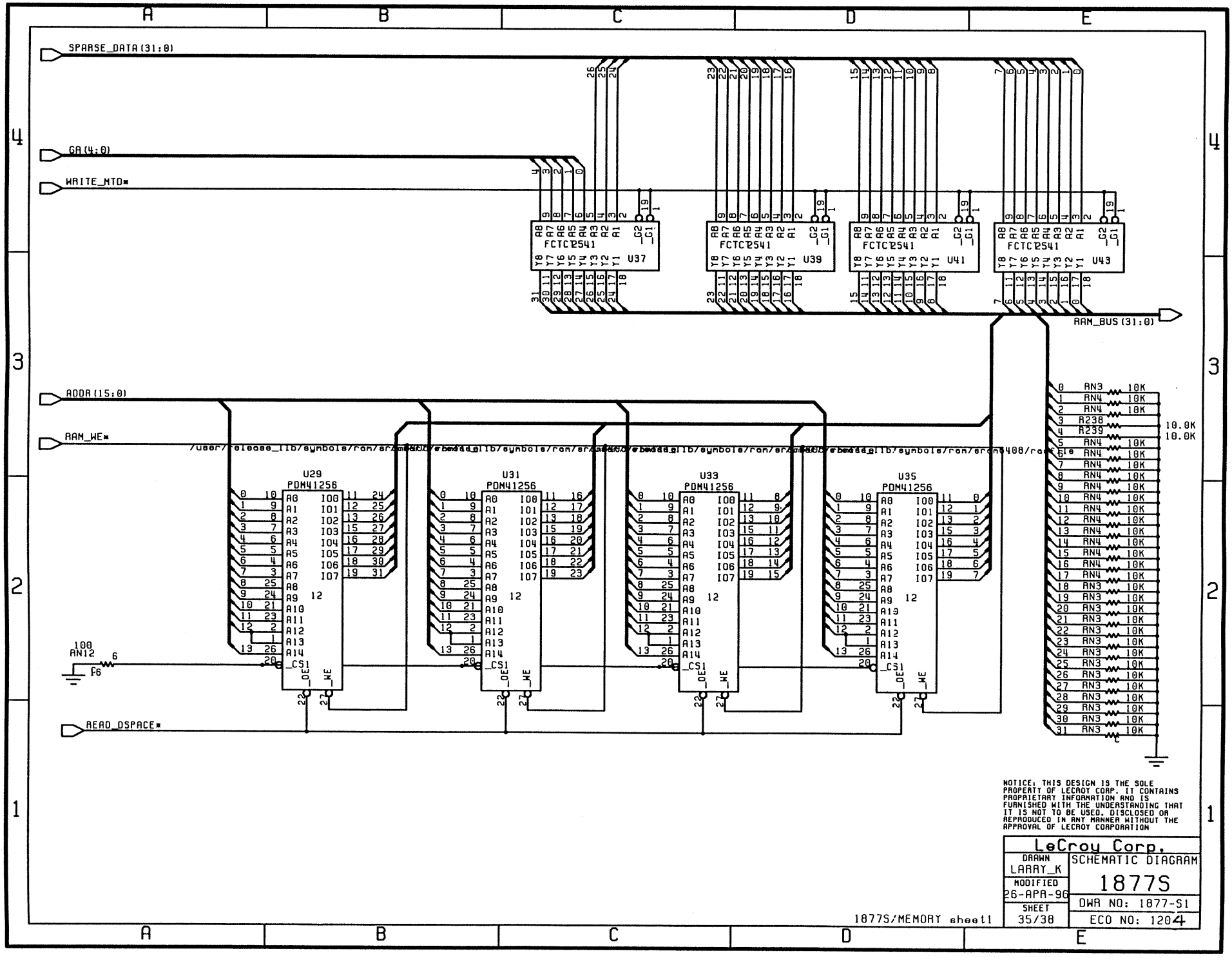
SPARSE_DATA(31:0)
GA(4:0)
WRITE_MTD*
ADDR(15:0)
RAM_WE*
READ_DSPACE*
RAM_BUS(31:0)
U37
U39
U41
U43
FCTC2541
U29
U31
U33
U35
PDM41256
RN12
RN3
RN4
R238
R239
10.0K
10K
NOTICE: THIS DESIGN IS THE SOLE PROPERTY OF LECROY CORP. IT CONTAINS PROPRIETARY INFORMATION AND IS FURNISHED WITH THE UNDERSTANDING THAT IT IS NOT TO BE USED, DISCLOSED OR REPRODUCED IN ANY MANNER WITHOUT THE APPROVAL OF LECROY CORPORATION
LeCroy Corp.
DRAWN LARRY_K
MODIFIED 26-APR-96
SHEET 35/38
SCHEMATIC DIAGRAM
1877S
DWG NO: 1877-S1
ECO NO: 1204
1877S/MEMORY sheet1

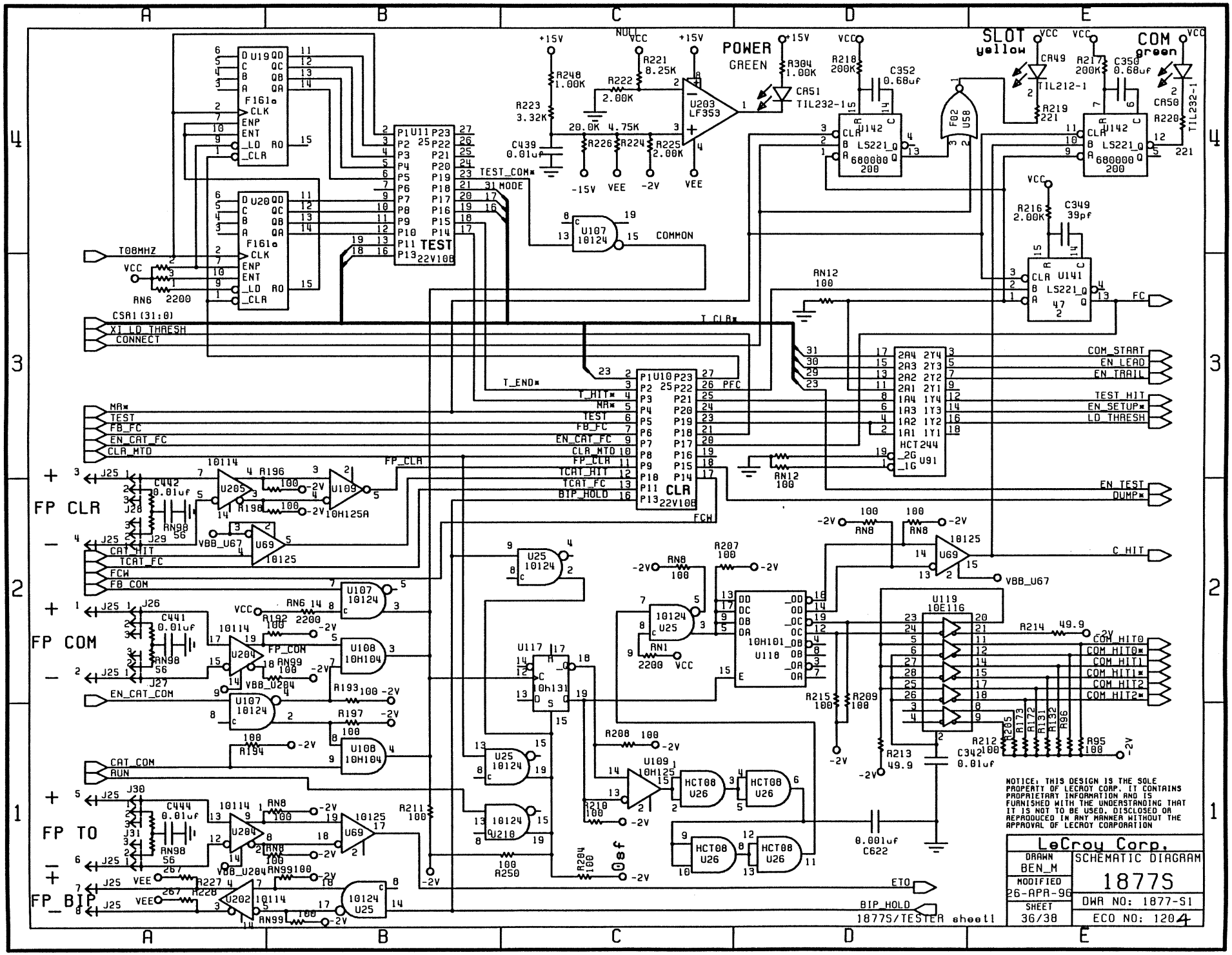
POWER
GREEN
SLOT
yellow
COM
green
TEST
22V10B
CLR
22V10B
FP CLR
FP COM
FP TO
FP_BIP
TO8MHZ
CSA1(31:0)
XI_LD_THRESH
CONNECT
MA*
TEST
FB_FC
EN_CAT_FC
CLR_MTD
CAT_HIT
TCAT_FC
FCW
FB_COM
CAT_COM
RUN
EN_CAT_COM
TEST_COM*
MODE
COMMON
T_CLR*
T_END*
T_HIT*
PFC
FP_CLR
FP_COM
COM_START
EN_LEAD
EN_TRAIL
TEST_HIT
EN_SETUP*
LD_THRESH
EN_TEST
DUMP*
C_HIT
COM_HIT0
COM_HIT0*
COM_HIT1
COM_HIT1*
COM_HIT2
COM_HIT2*
ETO
BIP_HOLD
FC
NOTICE: THIS DESIGN IS THE SOLE PROPERTY OF LECROY CORP. IT CONTAINS PROPRIETARY INFORMATION AND IS FURNISHED WITH THE UNDERSTANDING THAT IT IS NOT TO BE USED, DISCLOSED OR REPRODUCED IN ANY MANNER WITHOUT THE APPROVAL OF LECROY CORPORATION
LeCroy Corp.
DRAWN BEN_M
MODIFIED 26-APR-96
SHEET 36/38
SCHEMATIC DIAGRAM
1877S
DWG NO: 1877-S1
ECO NO: 1204
1877S/TESTER sheet1

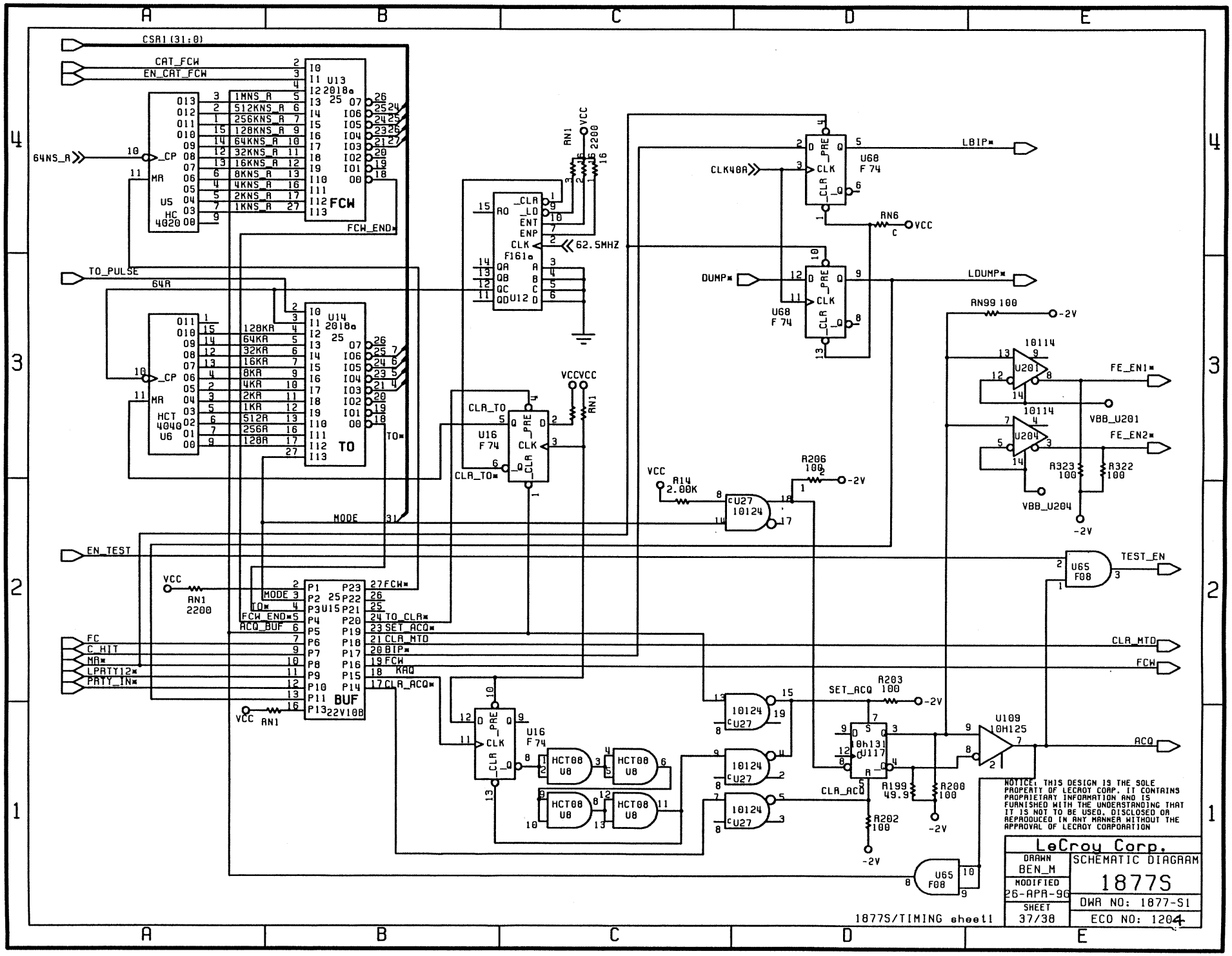
CSR1(31:0)
CAT_FCW
EN_CAT_FCW
64NS_A
U5 HC 4020
U13 2018a
FCW
FCW_END*
TO_PULSE
64A
U14 2018a
TO
TO*
U6 HCT 4040
EN_TEST
VCC
RN1 2200
U15 BUF 22V10B
MODE
FC
C_HIT
MA*
LPRTY12*
PRTY_IN*
ACQ_BUF
U12 F161a
62.5MHZ
U16 F74
CLR_TO
CLR_TO*
U68 F74
CLK40A
LBIP*
DUMP*
LDUMP*
RN6
RN99 100
-2V
U201 10114
U204 10114
FE_EN1*
FE_EN2*
VBB_U201
VBB_U204
R323 100
R322 100
R14 2.00K
U27 10124
R206 100
U65 F08
TEST_EN
CLR_MTD
FCW
ACQ
SET_ACQ
R203 100
U117 10H131
U109 10H125
R199 49.9
R200 100
R202 100
CLR_ACQ
HCT08 U8
TO_CLR*
SET_ACQ*
BIP*
KAQ
CLR_ACQ*
NOTICE: THIS DESIGN IS THE SOLE PROPERTY OF LECROY CORP. IT CONTAINS PROPRIETARY INFORMATION AND IS FURNISHED WITH THE UNDERSTANDING THAT IT IS NOT TO BE USED, DISCLOSED OR REPRODUCED IN ANY MANNER WITHOUT THE APPROVAL OF LECROY CORPORATION
LeCroy Corp.
DRAWN BEN_M
MODIFIED 26-APR-96
SHEET 37/38
SCHEMATIC DIAGRAM
1877S
DWG NO: 1877-S1
ECO NO: 1204
1877S/TIMING sheet1

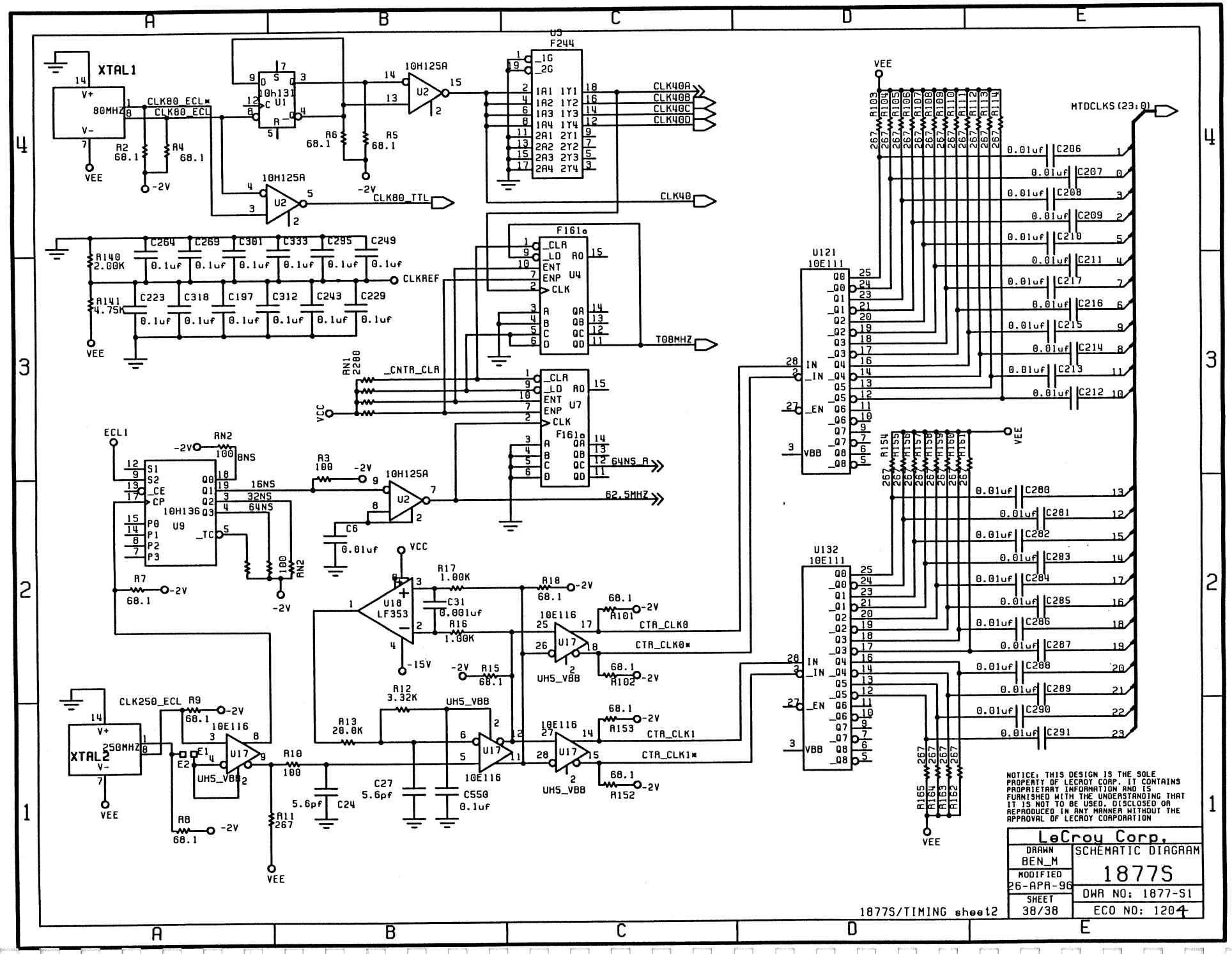
XTAL1
80MHZ
CLK80_ECL*
CLK80_ECL
10H131
U1
10H125A
U2
CLK80_TTL
U5
F244
CLK40A
CLK40B
CLK40C
CLK40D
CLK40
F161a
U4
U7
CLKREF
T08MHZ
_CNTR_CLR
RN1
2280
64NS_A
62.5MHZ
ECL1
RN2
10H136
U9
16NS
32NS
64NS
8NS
U18
LF353
CTR_CLK0
CTR_CLK0*
CTR_CLK1
CTR_CLK1*
10E116
U17
UH5_VBB
XTAL2
250MHZ
CLK250_ECL
MTDCLKS(23:0)
U121
10E111
U132
10E111
VEE
VCC
NOTICE: THIS DESIGN IS THE SOLE PROPERTY OF LECROY CORP. IT CONTAINS PROPRIETARY INFORMATION AND IS FURNISHED WITH THE UNDERSTANDING THAT IT IS NOT TO BE USED, DISCLOSED OR REPRODUCED IN ANY MANNER WITHOUT THE APPROVAL OF LECROY CORPORATION
LeCroy Corp.
DRAWN BEN_M
MODIFIED 26-APR-96
SHEET 38/38
SCHEMATIC DIAGRAM
1877S
DWR NO: 1877-S1
ECO NO: 1204
1877S/TIMING sheet2