Table of Contents

	Title
2	Notes
3	Sensors

FRDM-STBC-AGM01

freescale semiconductor

RF, Analog & Sensor Group

6501 William Cannon Drive West
Austin, TX 78735-8598

This document contains information proprietary to Freescale Semiconductor and shall not be used for engineering design, procurement or manufacture in whole or in part without the express written permission of Freescale Semiconductor.

ICAP Classification: FCP: FIUO: X PUBI:

Designer: Krithi S	Drawing Title: FRDM-STBC-AGM01		
Drawn by: Krithi S	Page Title: CONTENT		
Approved: Team	Size C	Document Number SCH-28566 PDF: SPF-28566	Rev C
	Date: Saturday, March 28, 2015	Sheet 1 of 1	

nless Otherwise Specified:
All resistors are in ohms, 5%, 1/8 Watt
All capacitors are in uF, 20%, 50V
All voltages are DC
All polarized capacitors are aluminum electrolytic

2. Interrupted lines coded with the same letter or letter combinations are electrically connected.

3. Device type number is for reference only. The number varies with the manufacturer.

4. Special signal usage:
   _B Denotes - Active-Low Signal
   <> or [] Denotes - Vectored Signals

5. Interpret diagram in accordance with American National Standards Institute specifications, current revision, with the exception of logic block symbology.

ICAP Classification:	FCP: ___	FIUO: X	PUBL: ___
Drawing Title:	FRDM-STBC-AGM01		
Page Title:	NOTES		
Size: C	Document Number: SCH-28566 PDF: SPF-28566		Rev: C
Date: Saturday, March 28, 2015		Sheet 2 of 3	

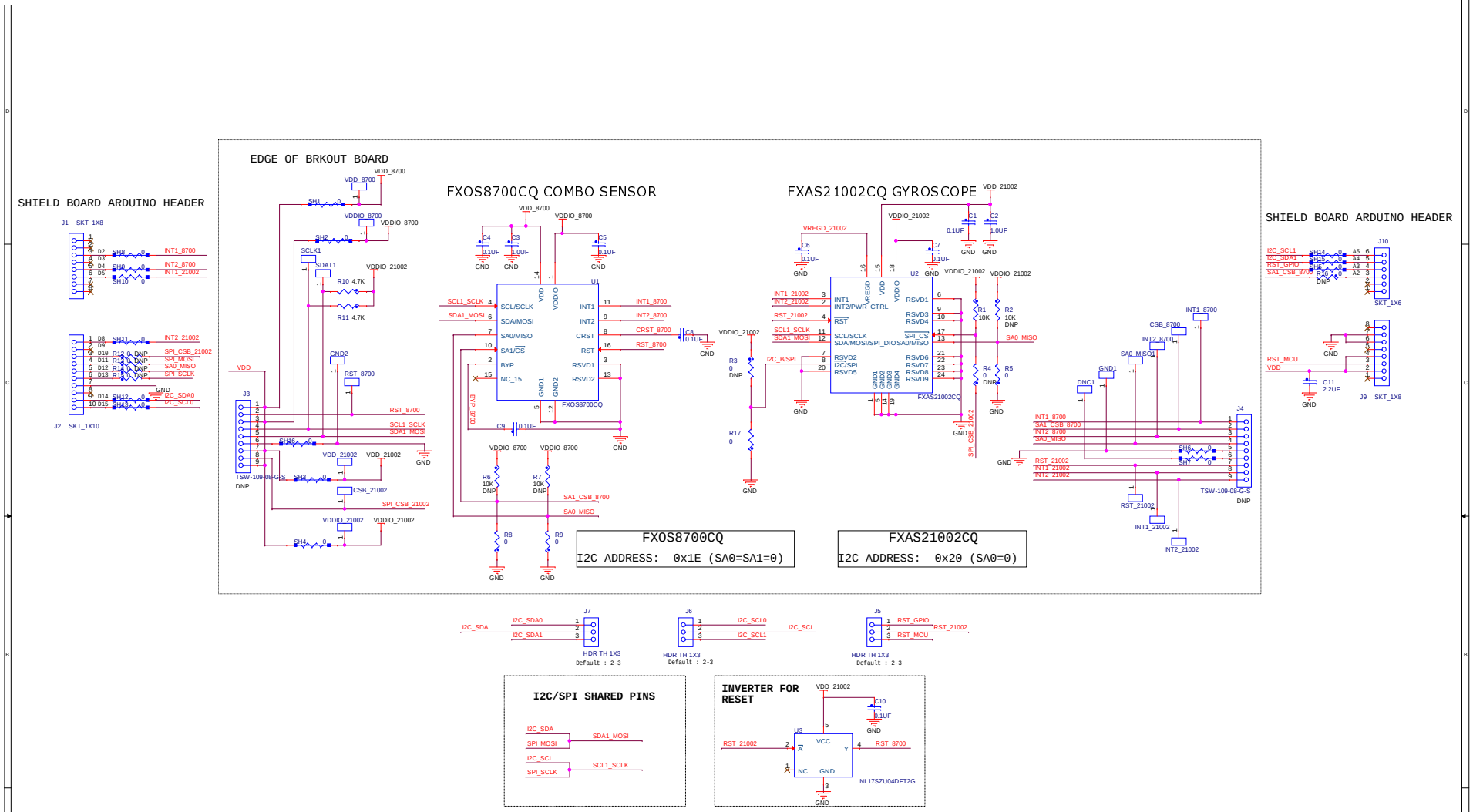

freescale

ICAP Classification: FCP: ___ FIUO: X PUBL: ___

Drawing Title: **FRDM-STBC-AGM01**

Page Title: **SENSORS**

Size	Document Number	Rev
C	SCH-28566 PDF: SPF-28566	C

Date: Saturday, March 28, 2015 Sheet 3 of 3