Table of Contents

1	TITLE & REVISION STATUS
2	CIRCUITRY

Revisions

Rev	Description	Date
0	Original Release	xxxxxxx

NOTES:

1. UNLESS OTHERWISE SPECIFIED:
RESISTANCE VALUES ARE IN OHMS.
RESISTORS ARE 1/0 W, ±1% or 1/8W, ±5%.
CAPACITANCE VALUES ARE IN MICROFARADS, ±10% or ±20%.
POLARIZED CAPACITORS ARE TANTALUM.

2. INTERRUPTED LINES CODED WITH THE SAME LETTER OR LETTER COMBINATIONS ARE ELECTRICALLY CONNECTED.

3. DEVICE TYPE NUMBER IS FOR REFERENCE ONLY. THE NUMBER VARIES PER MANUFACTURER.

4. SPECIAL SIGNAL USAGE:
_B DENOTES - ACTIVE-LOW SIGNAL
<> OR [] DENOTES - VECTORED SIGNALS

5. INTERPRET DRAWING IAW ANSI SPECIFICATIONS, CURRENT REVISION, WITH THE EXCEPTION OF LOGIC BLOCK SYMBOLOGY.

Detroit Automotive Technology Center
28125 Cabot Drive, Suite 100
Novi, MI 48377

Drawn by: CDC Technologies, Inc.	Date: 12/22/2009	TITLE: LFDA7455	
Designer: CDC Technologies, Inc.	Ref: CDC1958	SIZE B / GEDTTL: / GEDABV:	DWG. NO. LFDA7455 / REV: O
Approved: Daniel Beeker	Date: 12/22/2009		
Quality: Daniel Beeker	Date: 12/22/2009	LAST MODIFIED= Tuesday, December 22, 2009	SHEET 1 of 2

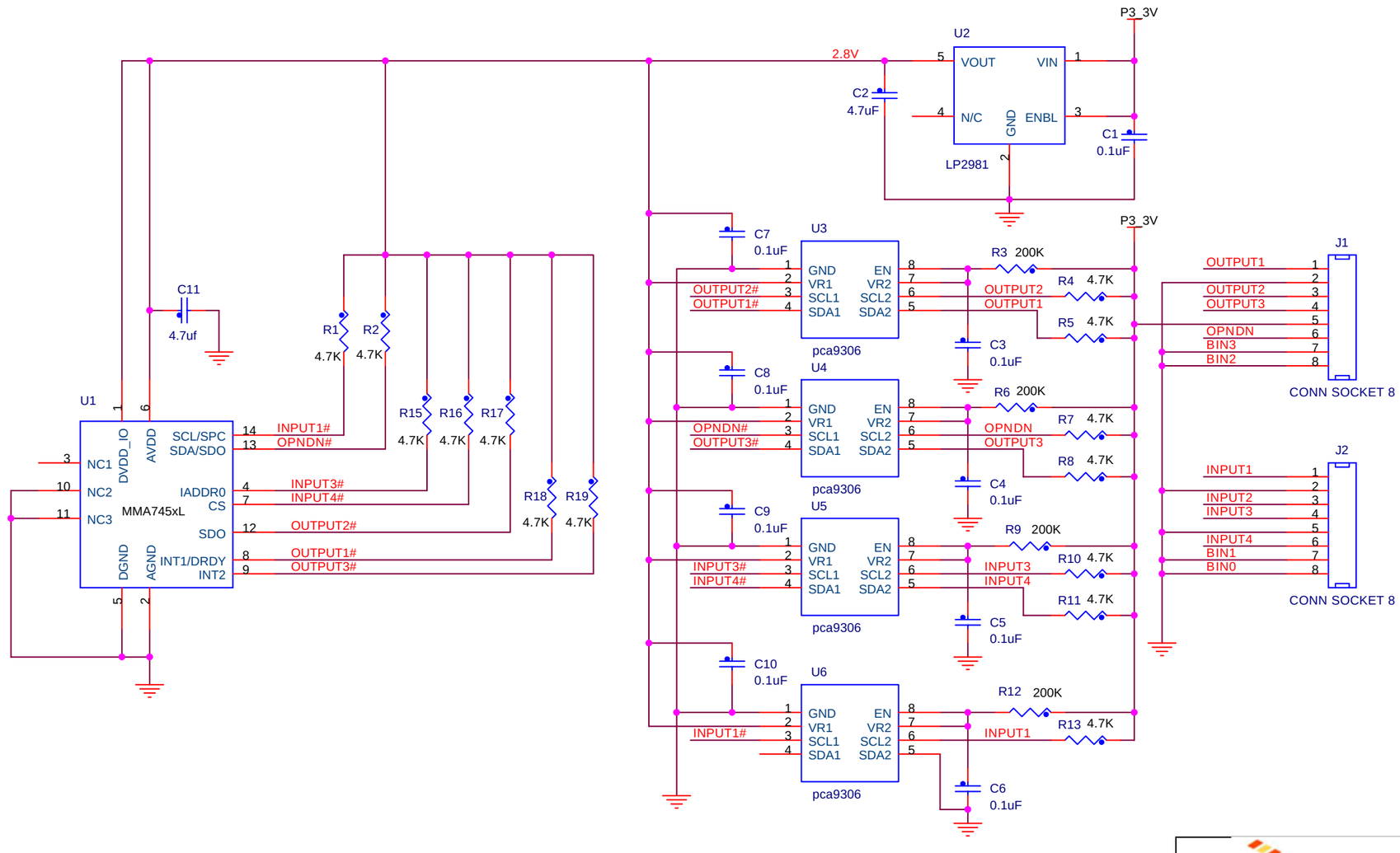

freescale semiconductor

Detroit Automotive Technology Center
28125 Cabot Drive, Suite 100
Novi, MI 48377

Drawn by: CDC Tech, Inc.	Date: 12/22/2009	Drawing Title: **LFDA7455**
Designer: CDC Tech, Inc.	Ref: CDC1958	Page Title: **CIRCUITRY**
Approved: Daniel Beeker	Date: 12/22/2009	Document Number: LFDA7455 — Rev O
Quality: Daniel Beeker	Date: 12/22/2009	Date: Tuesday, December 22, 2009 — Sheet 2 of 2 — Size B