REVISION HISTORY				
ECO	REV	DESCRIPTION	APPROVED	DATE
-	1	PRODUCTION FAB	JIM D.	05-28-10

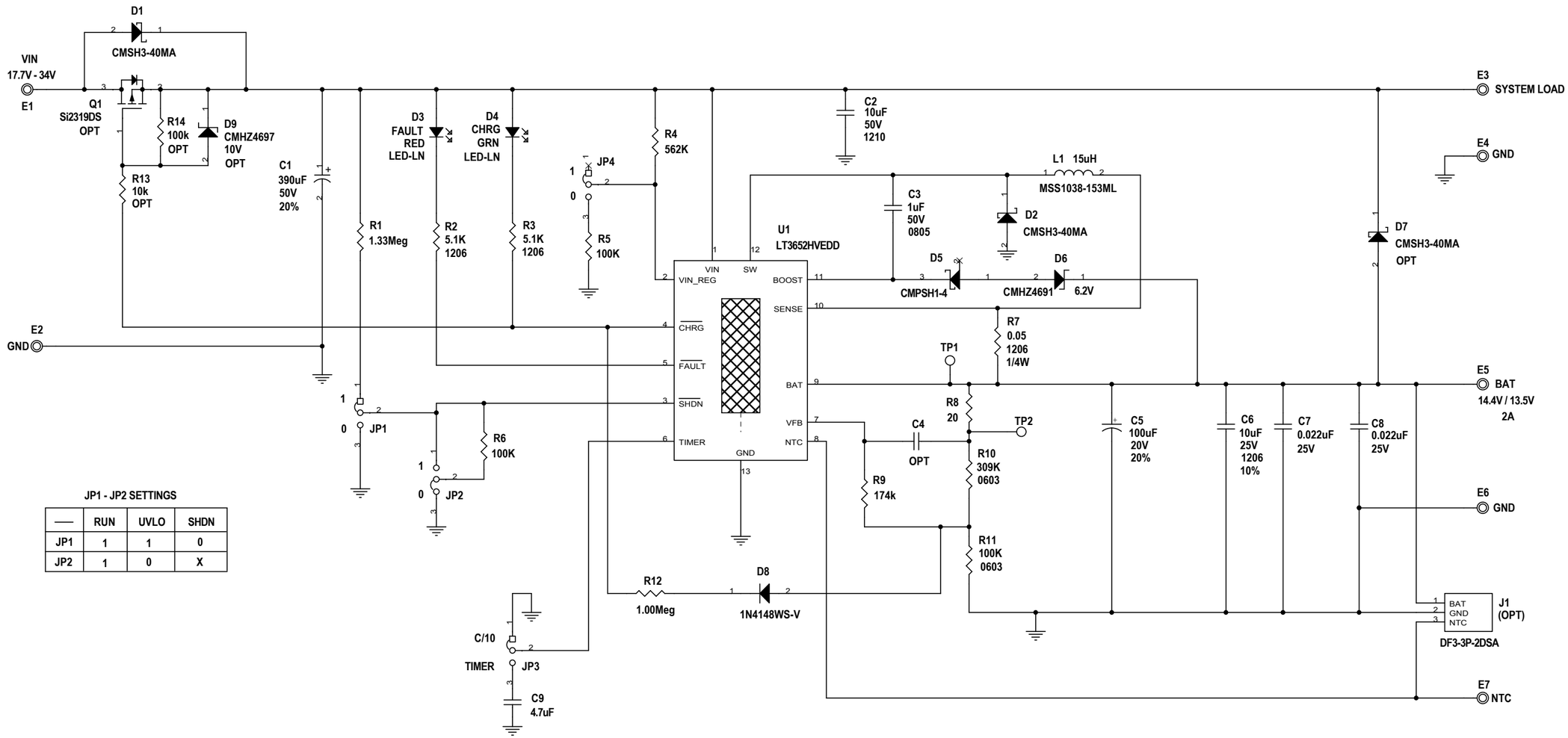

JP1 - JP2 SETTINGS

—	RUN	UVLO	SHDN
JP1	1	1	0
JP2	1	0	X

Unless noted:
Resistors: Ohms
0402
1%
1/16W
Capacitors:
0402
10%
10V

CUSTOMER NOTICE

LINEAR TECHNOLOGY HAS MADE A BEST EFFORT TO DESIGN A CIRCUIT THAT MEETS CUSTOMER-SUPPLIED SPECIFICATIONS; HOWEVER, IT REMAINS THE CUSTOMER'S RESPONSIBILITY TO VERIFY PROPER AND RELIABLE OPERATION IN THE ACTUAL APPLICATION. COMPONENT SUBSTITUTION AND PRINTED CIRCUIT BOARD LAYOUT MAY SIGNIFICANTLY AFFECT CIRCUIT PERFORMANCE OR RELIABILITY. CONTACT LINEAR TECHNOLOGY APPLICATIONS ENGINEERING FOR ASSISTANCE.

THIS CIRCUIT IS PROPRIETARY TO LINEAR TECHNOLOGY AND SUPPLIED FOR USE WITH LINEAR TECHNOLOGY PARTS.

APPROVALS	
PCB DES.	NC
APP ENG.	JIM D.

SCALE = NONE

LINEAR TECHNOLOGY
1630 McCarthy Blvd.
Milpitas, CA 95035
Phone: (408)432-1900 www.linear.com
Fax: (408)434-0507

LTC Confidential-For Customer Use Only

TITLE: SCHEMATIC

SLA 2A BATTERY CHARGER FOR SOLAR POWER

SIZE	IC NO.	REV.
N/A	LT3652HVEDD DEMO CIRCUIT 1688A	1

DATE: Wednesday, June 02, 2010 SHEET 1 OF 1