I2C 2005-1 Demonstration Board

LED Dimmers and Blinkers

PCA9531 and PCA9551

Oct, 2006

Intelligent I²C LED Controller

RGBA Dimmer/Blinker – PCA9633/4/5

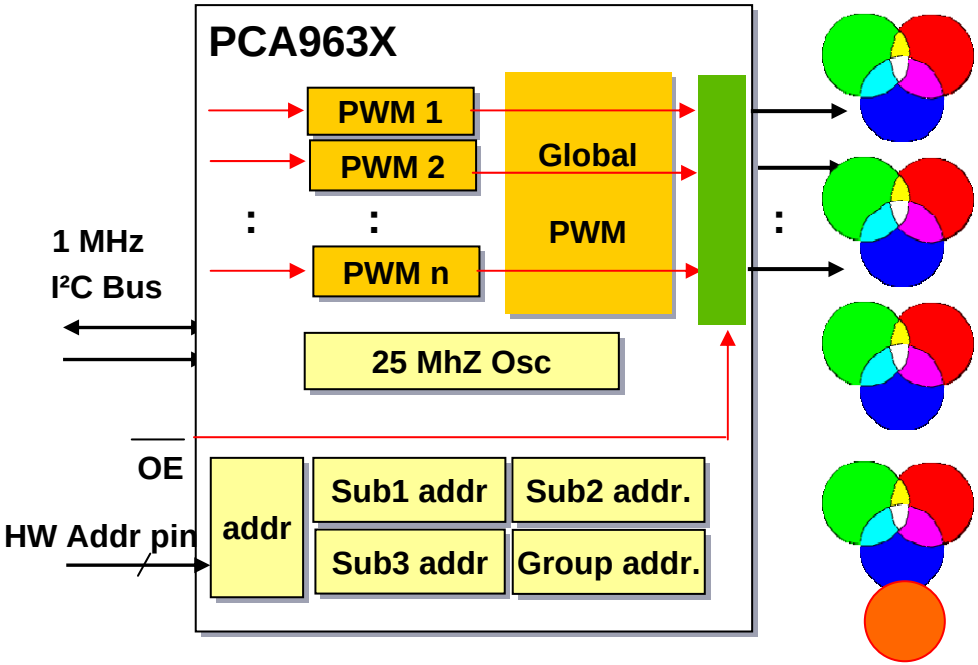

- PCA9633 8-pin = no HW pin
- PCA9633 10-pin = 2 HW pins
- PCA9633 16-pin = 7 HW pins

Dimmer – PCA9531/2/3/4

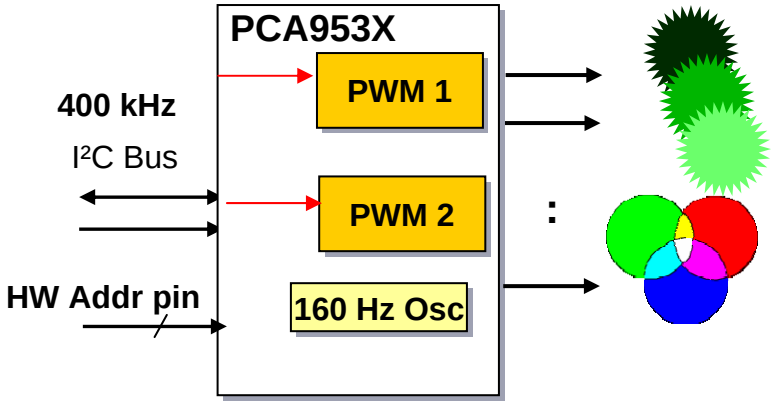

Blinker – PCA9551/2/3/4

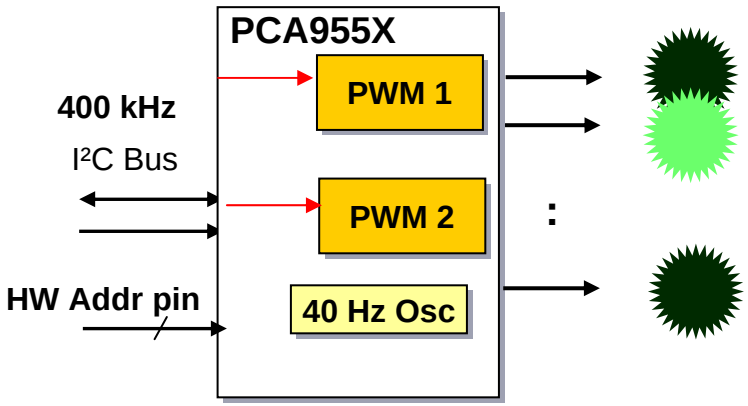

PCA953x and PCA955x
LED Dimmers & Blinkers – In a nutshell

- 2, 4, 8 and 16 bits Open Drain output drivers that can drive up to 25 mA each
- Fully internal oscillator generates the programmed blinking or dimming schemes
- Each LED driver can be programmed to be:
  - Fully OFF (default power up state)
  - Fully ON
  - Blinking / Dimming at Frequency_0, Duty_Cycle_0
  - Blinking / Dimming at Frequency_1, Duty_Cycle_1
- 8-bit resolution for the Blinking / Dimming frequencies and duty cycle

	LED DIMMERS		LED BLINKERS	
Hex value	**0 (00h)**	**255 (FFh)**	**0 (00h)**	**255 (FFh)**
Frequency	**160 Hz**	**1 / 1.6 s**	**40 Hz**	**1 / 6.4 s**
Duty Cycle	**0 %**	**99.6 %**	**100 %**	**0.4 %**

- 2.3 V to 5.5 V power supply with 5 V tolerant I/O's
- Device portfolio:

# of bits	LED BLINKERS	LED DIMMERS
2	**PCA9550**	**PCA9530**
4	**PCA9553**	**PCA9533**
8	**PCA9551**	**PCA9531**
16	**PCA9552**	**PCA9532**

LED Lighting

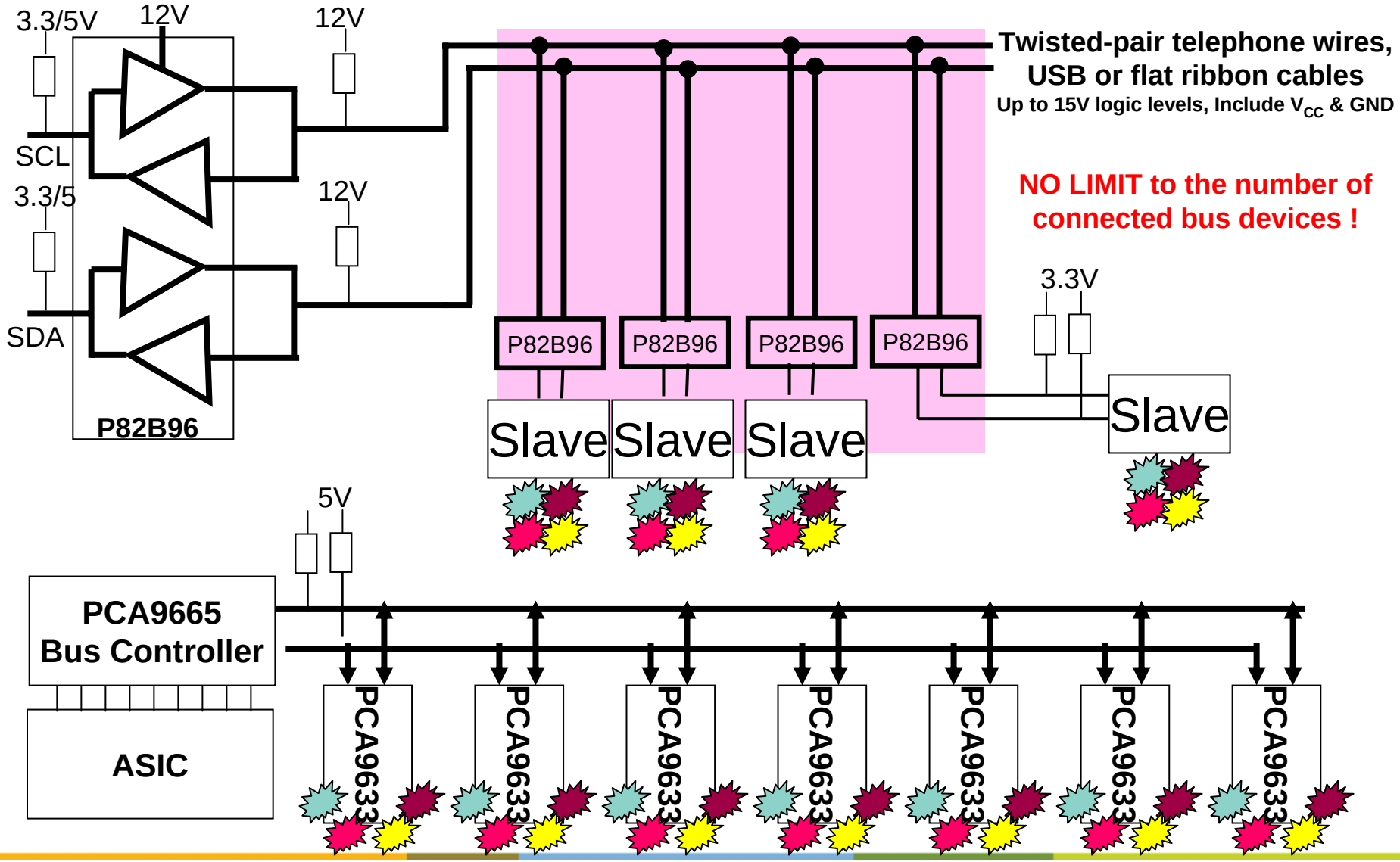

PCA9633: 4-bit I²C LED Driver

- 4 LED drivers
  - On, Off, Individual brightness, individual brightness + global blink/dim control
- Individual 8-bit (256 step) linear brightness control
- Global 8-bit linear brightness or blinking control
- 5 V tolerant programmable totem-pole / open drain structure:
  - 10 mA source, 25 mA sink capability
- Output state change at ACK or STOP command
- Active low /OE input pin allowing hardware dimming / blinking
- Software programmable I²C addresses
  - Sub calls allow groups of devices to be addressed at the same time
- Fast Mode Plus compatible I²C protocol
- 25 MHz fully internal oscillator
- Power Supply = 2.3 V to 5.5 V, - 40 to 85 °C

PCA9634 8-bit and PCA9635 16-bit also available

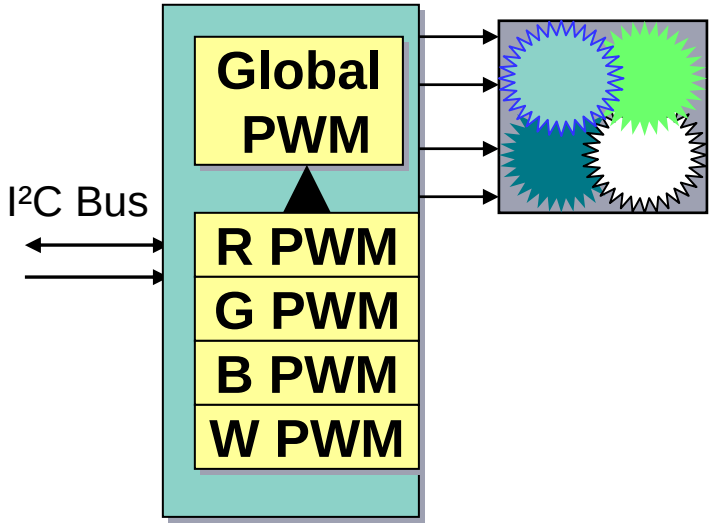

RGBW LED Mixing

Part Number	Package	Dev per bus
PCA9633D16	SO16	126
PCA9633DP1	TSSOP8	1
PCA9633DP2	TSSOP10	4
PCA9633PW	TSSOP16	126
PCA9633TK	HVSON8	1
PCA9633BS	HVQFN16	126

PCA9633 Bus Applications

Each PCA9633 has an individual address set by the seven hardware pins and then up to four more sub call addresses that are programmed via the I²C-bus to allow individual control of each node and also groups of nodes to be controlled with one I²C command.

Individual	1	2	3	4	5	6	7
Sub 1	126	126	126	126	126	126	126
Sub 2	125	124	123	125	124	123	125
Sub 3	122	122	122		121	121	121
Sub 4	120	120	119	119	118	118	117

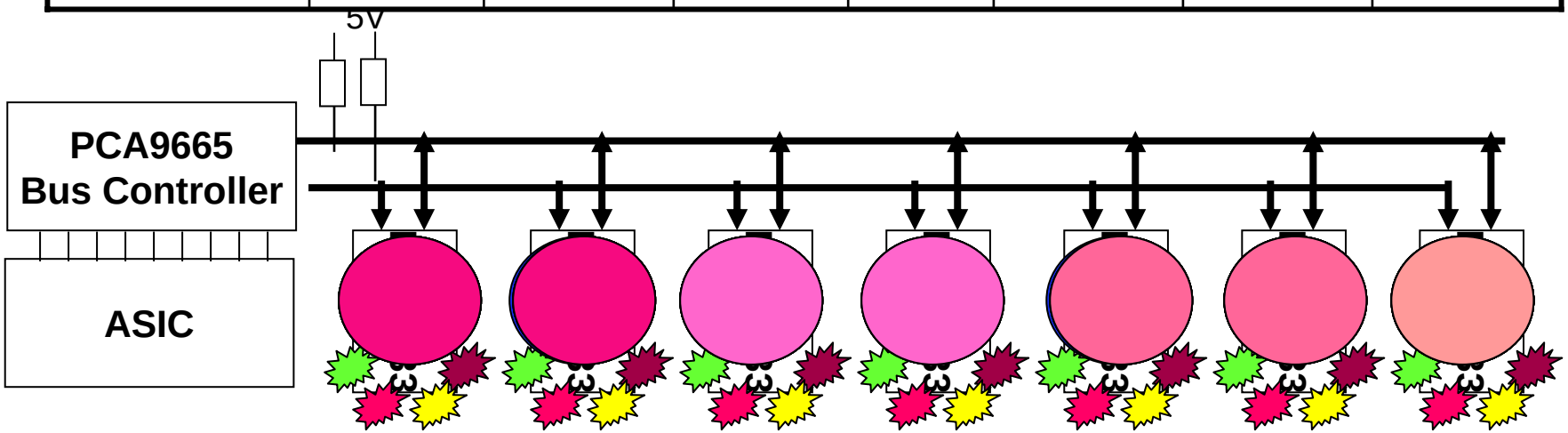

PCA9633 Demonstration Board

SW 5 & 6 used to turn bus pull up resistors on for only the master and termination cards.

P82B96 buffers micro onto the high drive I²C-bus

SW 4 send Output Enable signal to other boards

RJ45 connections & cable used for I²C-bus, power and /OE signal between cards

Push Buttons control micro and LEDs

60 V 350 mA FETs for higher brightness LED

SW 7 sends 9V battery power over the cables

Reprogram micro using ICP

SW 8 turns on 9V battery power

SW 1 - 3 sets address pins to GND or V_{CC} allowing up to 8 board to be connected to the same micro

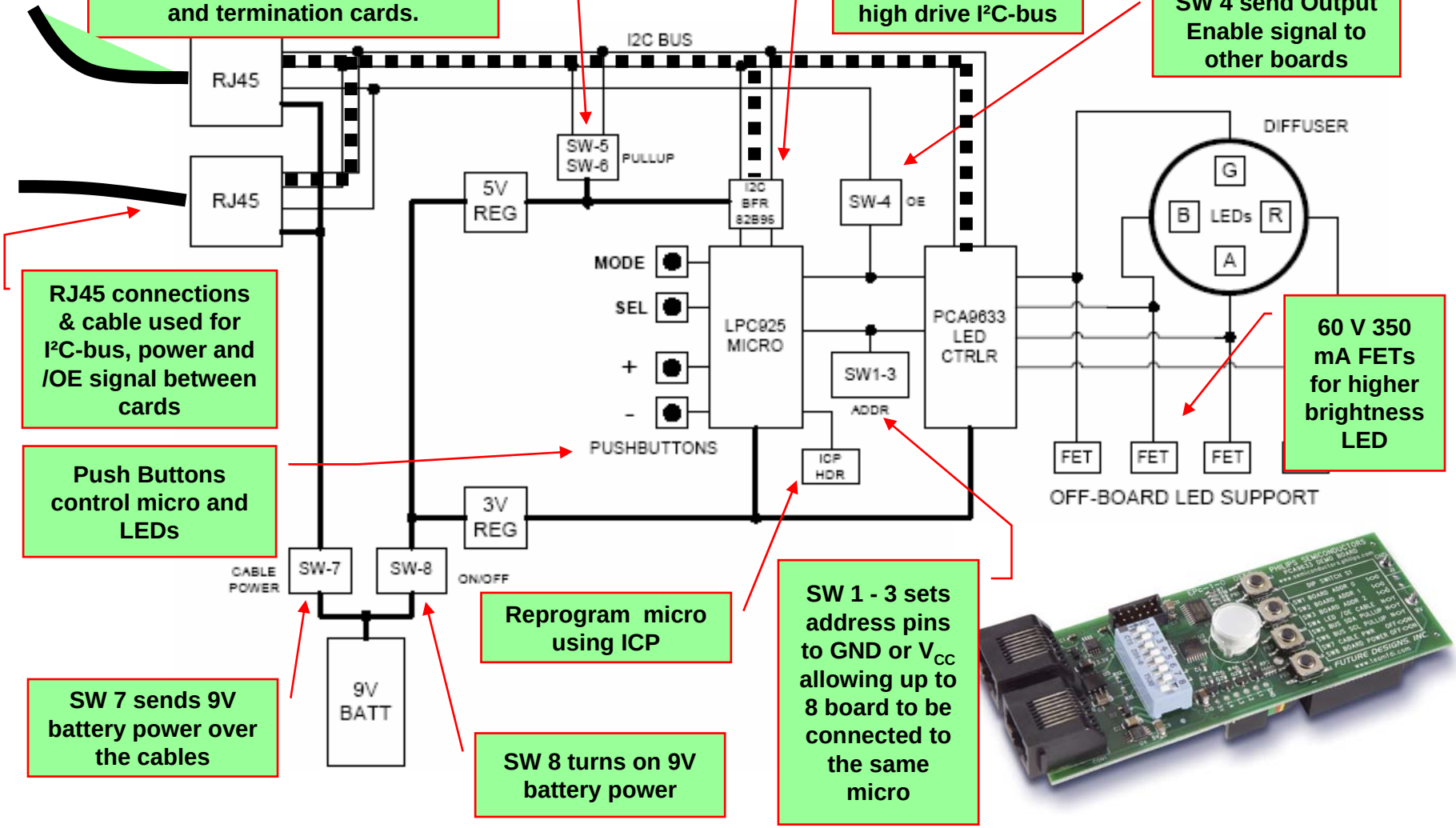

PCA9531 LED Blinker
Hardware and Register definition

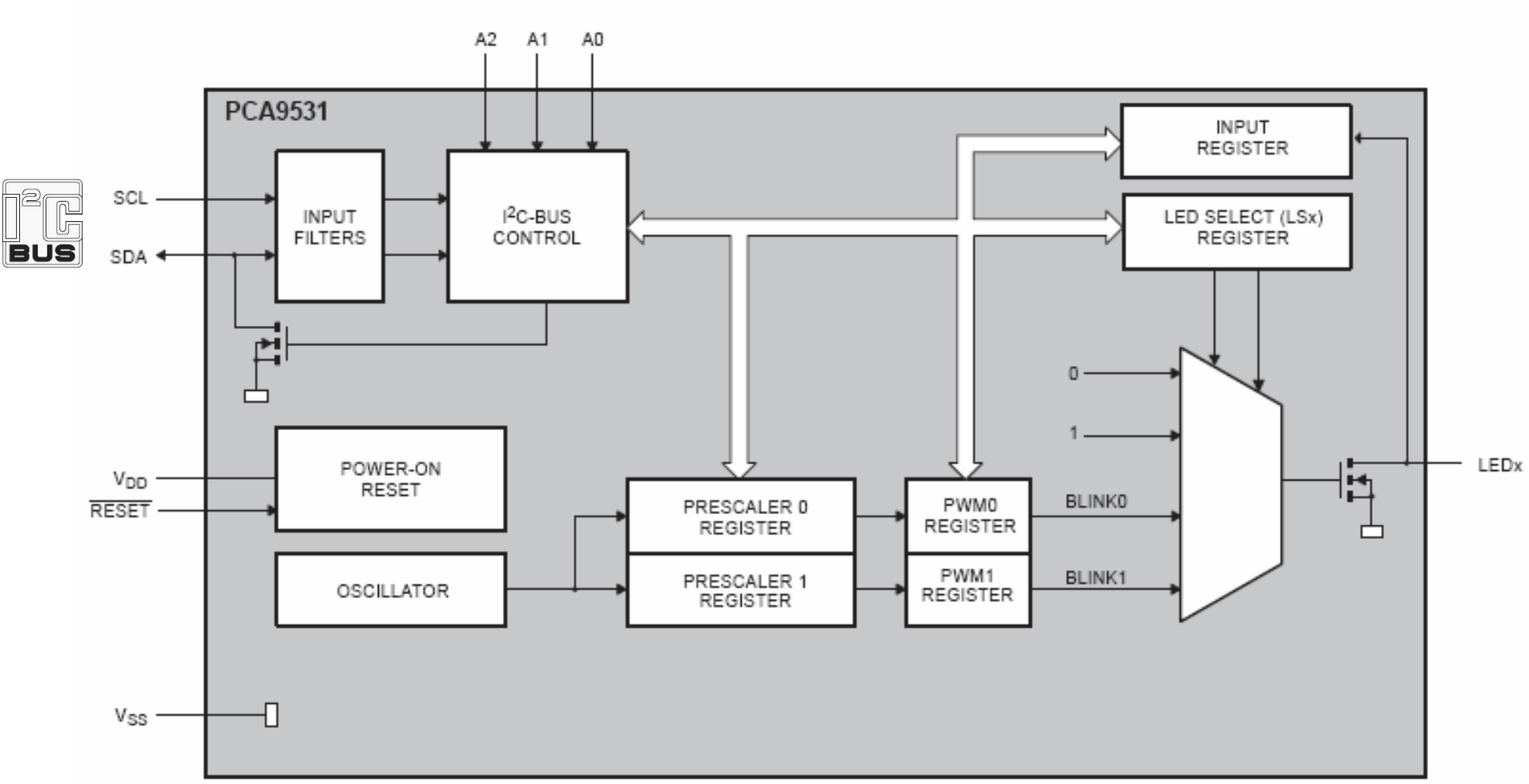

Device Hardware and Register definition

INPUT – Input Register: read back LED driver logic state

Programmable I²C Addresses
8 devices in the same bus

LSx – LED Selector: selects the state of the LED Driver

5 V tolerant
I²C bus

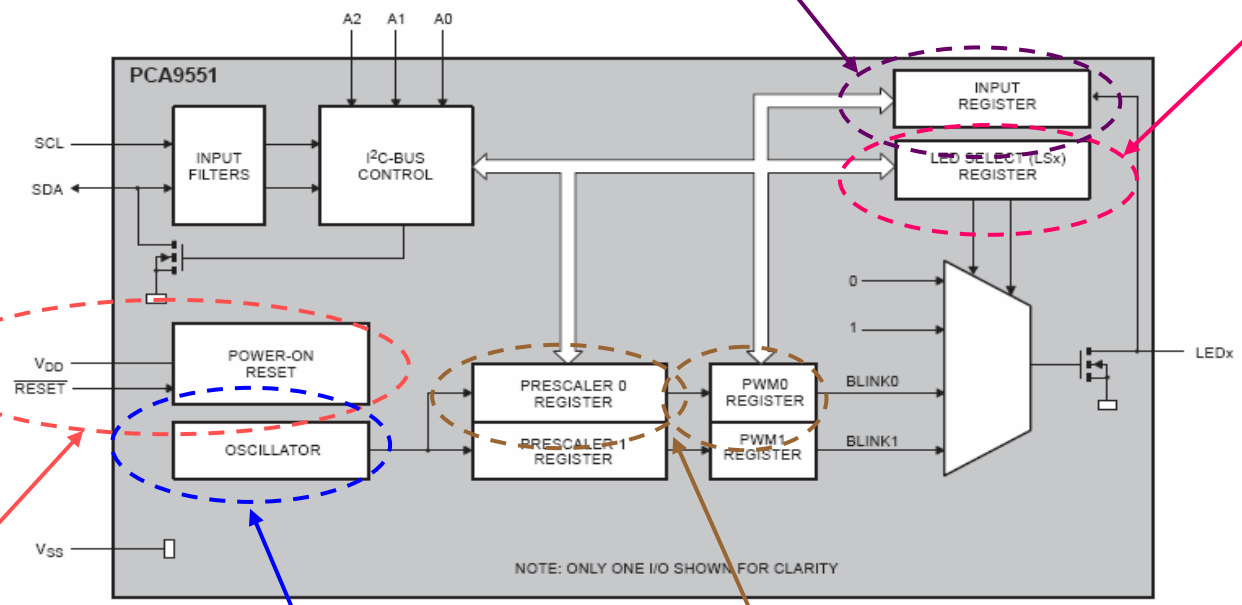

5 V tolerant, 25 mA capable open drain LED drivers

Device powers up in a known state

Active low RESET pin initializes the device in the same known state

PSCx - Prescaler register: defines the frequency to be used for the LED

PWMx – Pulse Width Modulation register: defines the duty cycle for the LED

x = 0 or 1

Internal oscillator – does not require any additional components

Demonstration Board: PCA9551 Hardware Introduction

MAIN I²C bus

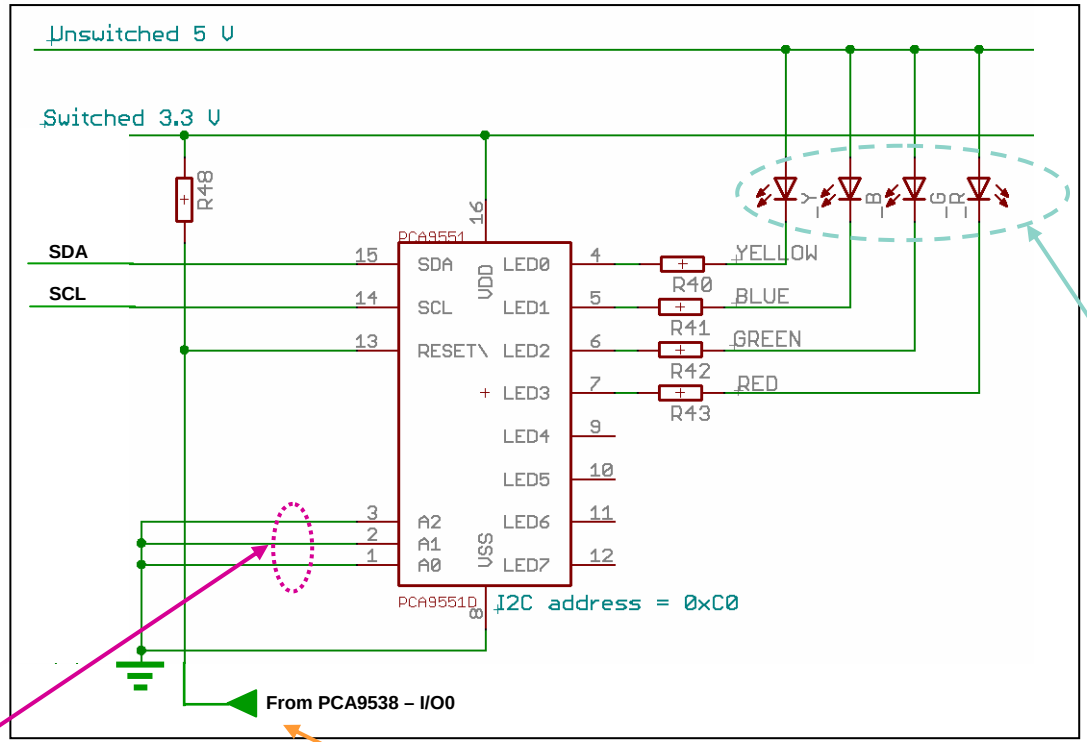

LEDs with different colors

Only 4 outputs connected to LEDs

PCA9551:
I²C address: A[2:0] = 000
Address = 0xC0

Active Low RESET input controlled by the PCA9538

I/O0 needs to be configured as an output

Demonstration Board
PCA9551 Hardware Introduction

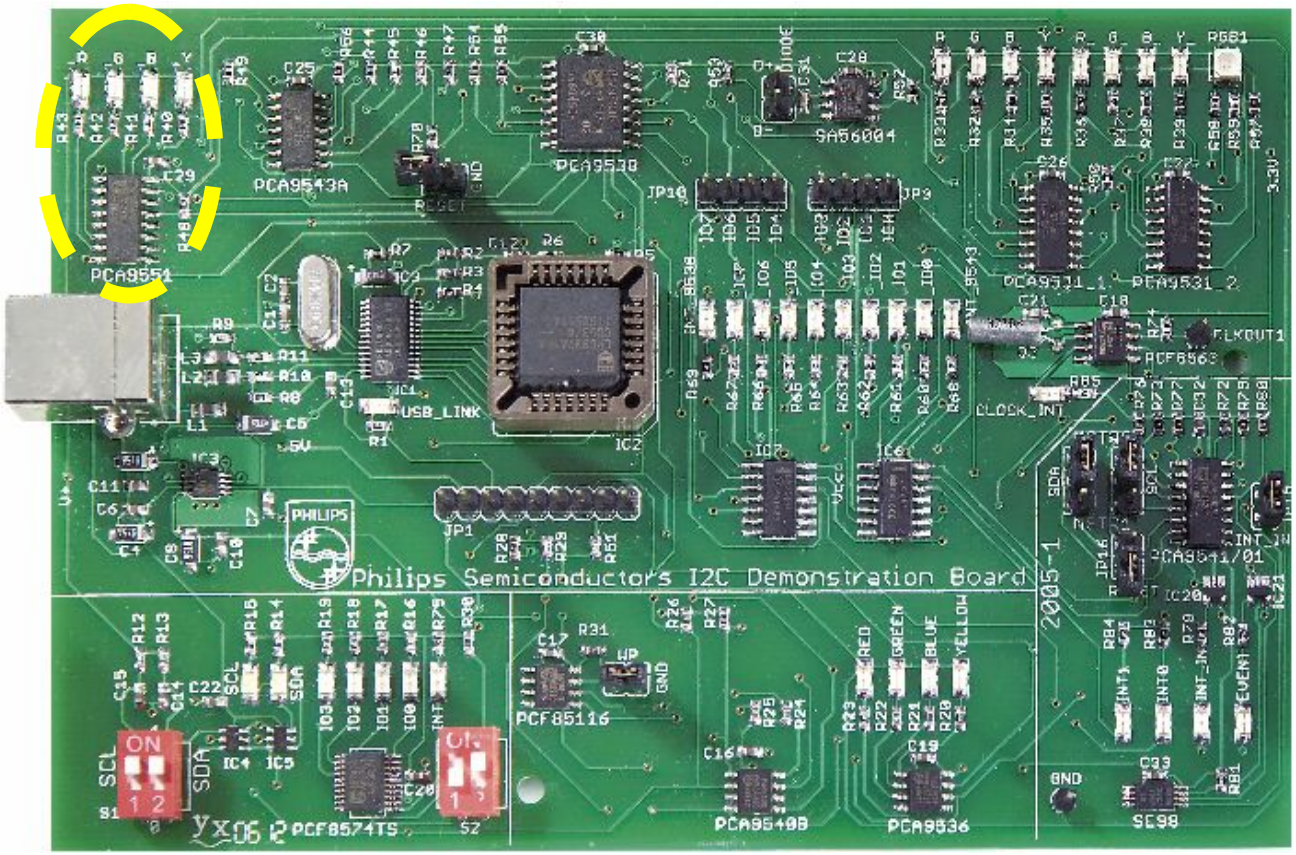

Demonstration Board
PCA9531 Hardware Introduction

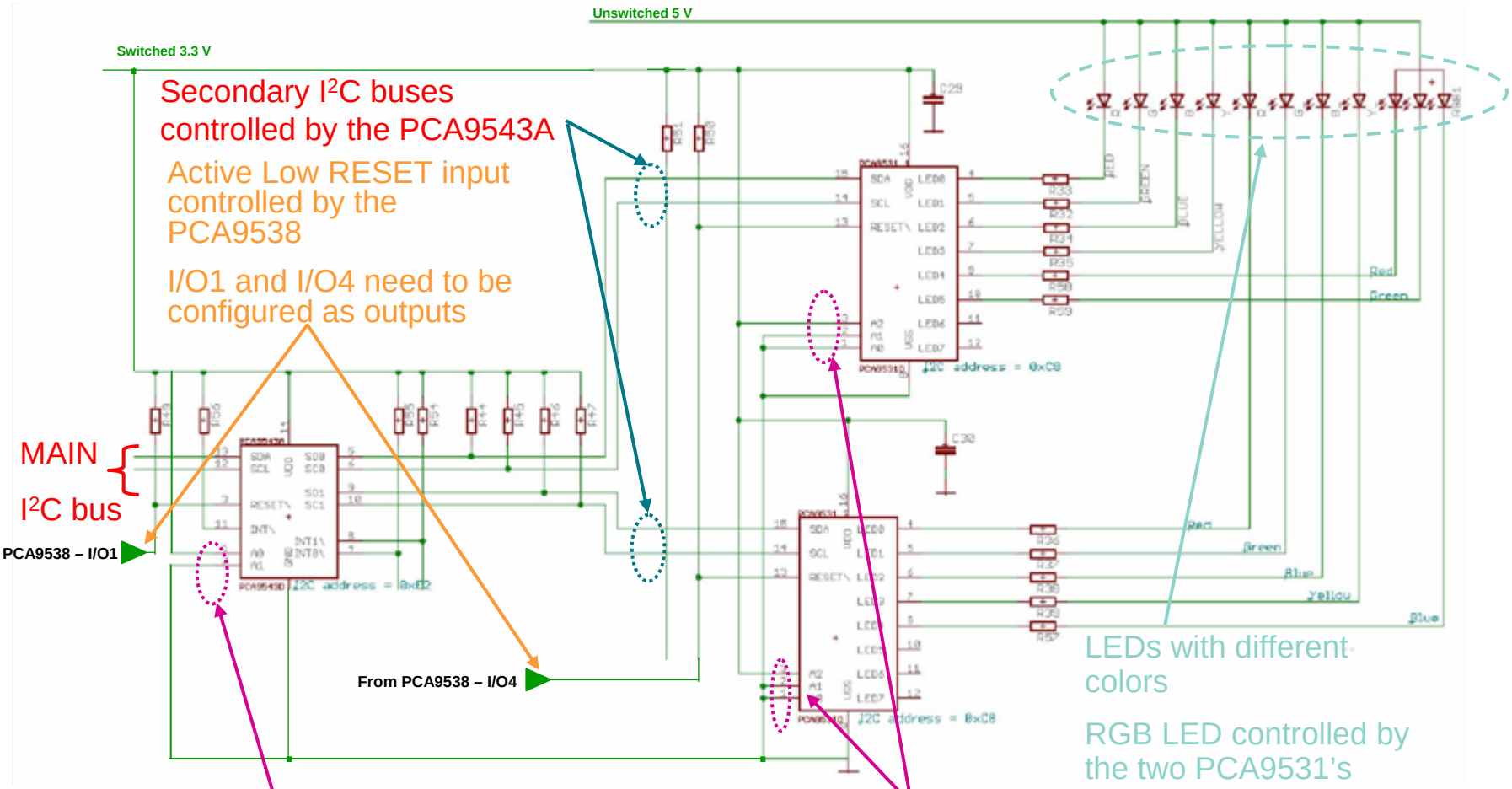

PCA9543A:
I²C address: A[1:0] = 01
Address = 0xE2

PCA9531 device 1 and device 2:
I²C address: A[2:0] = 100
Address = 0xC8

Demonstration Board
PCA9531 Hardware Introduction

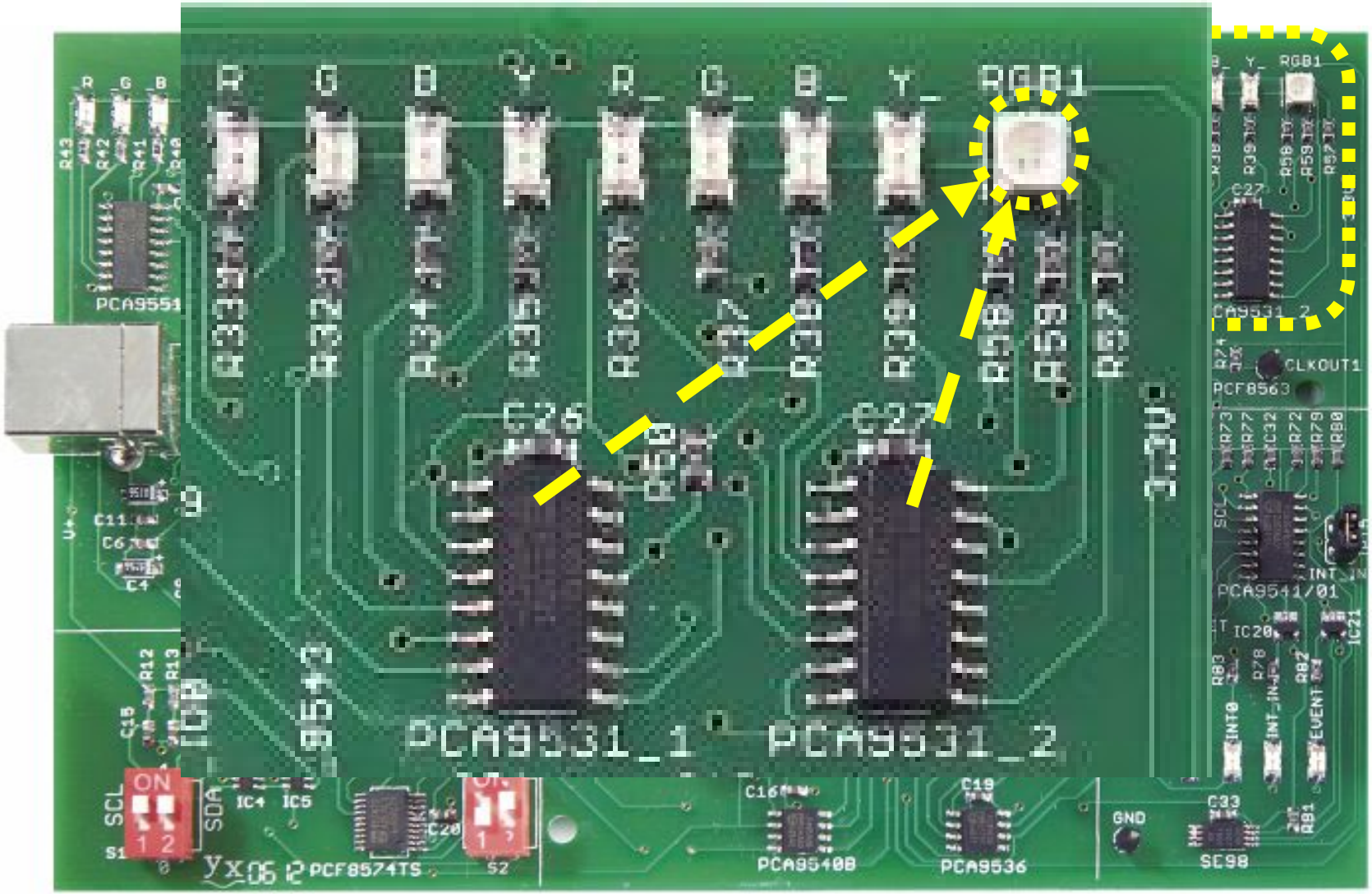

REGISTERS definition and PROGRAMMING

- PCA953x and PCA955x LED Dimmers and Blinkers have the same register mapping
- Registers:
  - INPUT: allows reading of the LED driver outputs
  - PSC0 & PWM0: define the Blinking or Dimming scheme 0 (8-bit value each)
  - PSC1 & PWM1: define the Blinking or Dimming scheme 1 (8-bit value each)
  - LS0 (up to LS3): defines the LED driver output state (4 possible states per output)
- A Blinking/Dimming scheme is defined by its period (PSC) and duty cycle (PWM)

- Programming differences
  - Frequency and duty cycles calculation
  - LED output state programming (2 bits per output)

Value	LED DIMMERS	LED BLINKERS
00	OFF	ON
01	ON	OFF
10	Rate 0	Rate 0
11	Rate 1	Rate 1

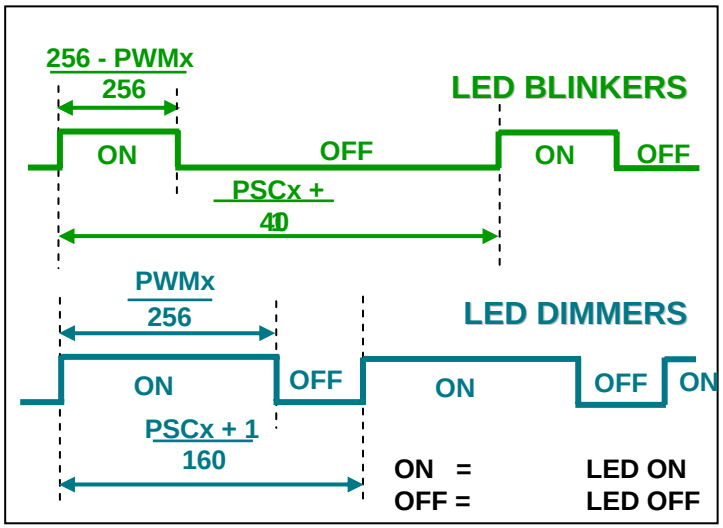

- Auto Increment feature
  - Allows more than one register to be programmed (or read) with the same command
  - Bit 4 in the Control Register (2nd byte - contains the # of the register to be addressed)
  - INPUT → PSC0 → PWM0 → PSC1 → PSC2 → LS0 → LS1 → LS2 → LS3

Hands-On 1: PCA9551GUI

1. Power sequence the board → Board OFF then ON
2. Open the PCA9551 GUI:
   Device → LED Blinkers and Dimmers → PCA9551 8-bit LED Blinker
3. Read all the registers. What do you read?
   All the LED outputs are OFF
   Both blinking rates default to slower blinking rate (once every ~ 6.4 s, 50 % duty cycle)
4. Program the 4 LEDs connected to the PCA9551 as following:
   LED0 (Y): ON
   LED1 (B): Blinking Rate 0 with Blinking Rate 0 = 1s – 75 % duty cycle
   LED2 (G): OFF
   LED3 (R): Blinking Rate 1 with Blinking Rate 1 = 0.2 s (5 Hz) – 25 % duty cycle
   Observe the result
5. Check the Auto Write option
   Program LED0 to LED3 to Blinking Rate 0
   Use the maximum frequency for Blinking Rate 0 (40 Hz) and change the duty cycle from min to max back and forth. What do you observe?
   Using the maximum frequency of the LED blinkers allow brightness control by changing the duty cycle. However, the human eye can observe some flickering (no perfect dimming) due to the fact that the dimming frequency is not high enough. Effective dimming is achieved with a PWM frequency > 80 to 100 Hz

RGB COLOR MIXING

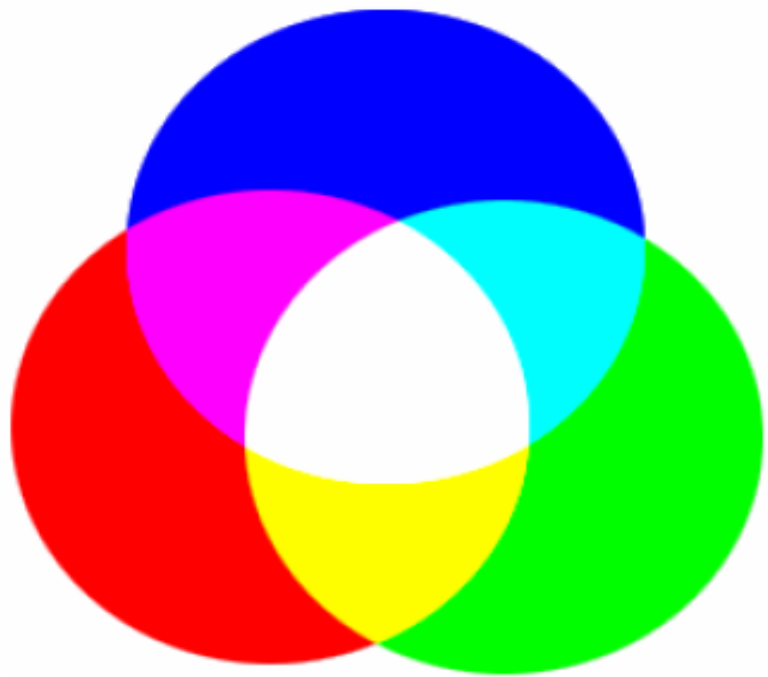

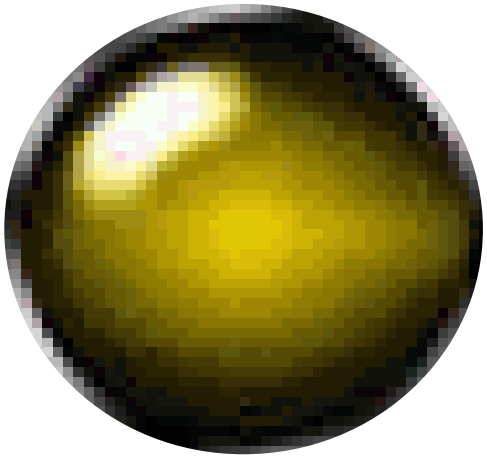

Human eye sees the sum of primary colors' average brightness:

X % Red + Y % Green + Z % Blue

Using PWMs To Mix Colors In RGB LED

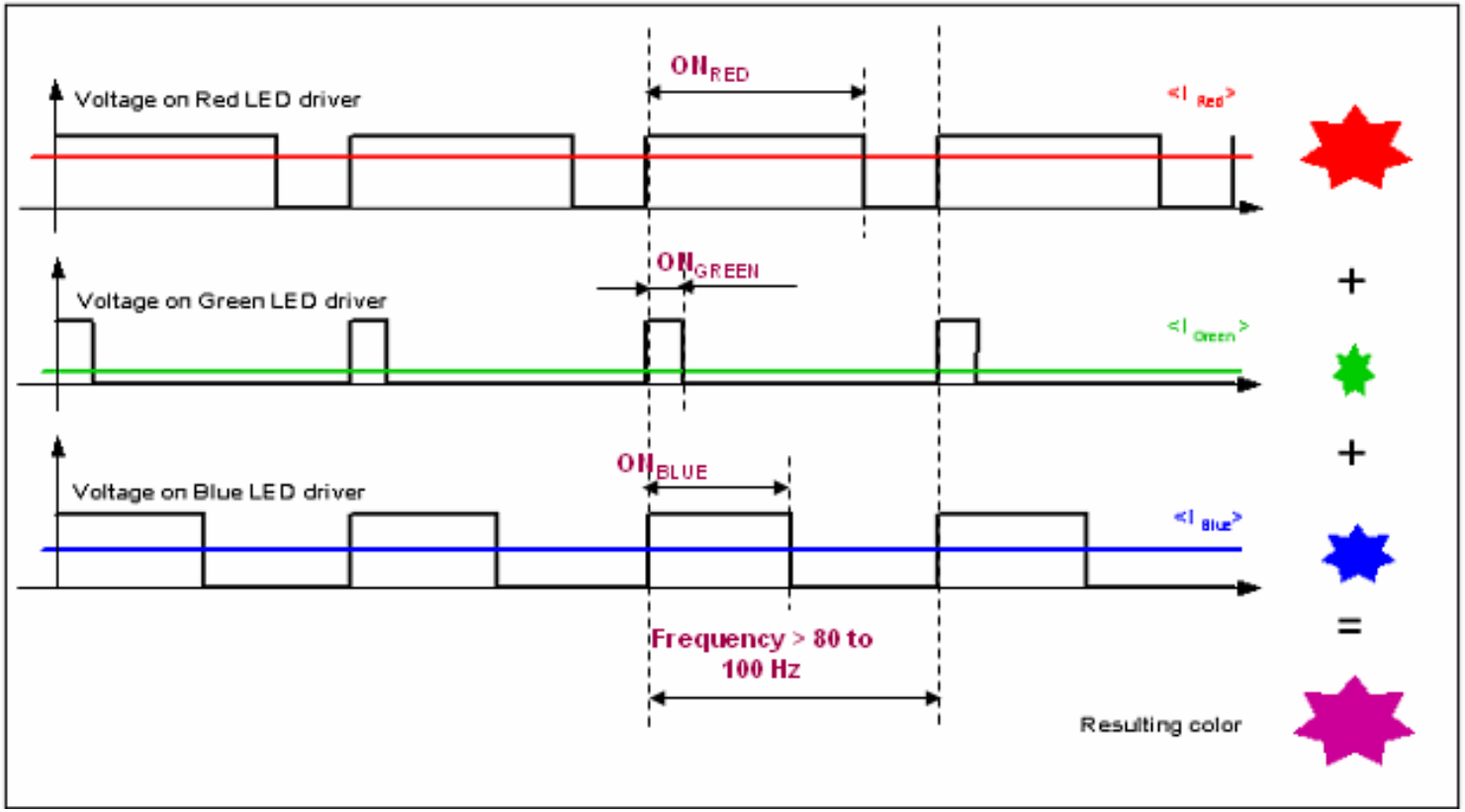

To perform color mixing:
Frequency high enough so that the human eye does not see the ON/OFF phases
Brightness for each primary color (desired amount of each primary color) is controlled with the duty cycle
Human eye sees the sum of primary colors' average brightness:X % Red + Y % Green + Z % Blue

PCA9531 LED Dimmer GUI

Device → LED Blinkers and Dimmers → PCA9531 8-bit LED Dimmer

Blinking / Dimming frequency and duty cycle selection

Register Hexadecimal values

LED output state selection

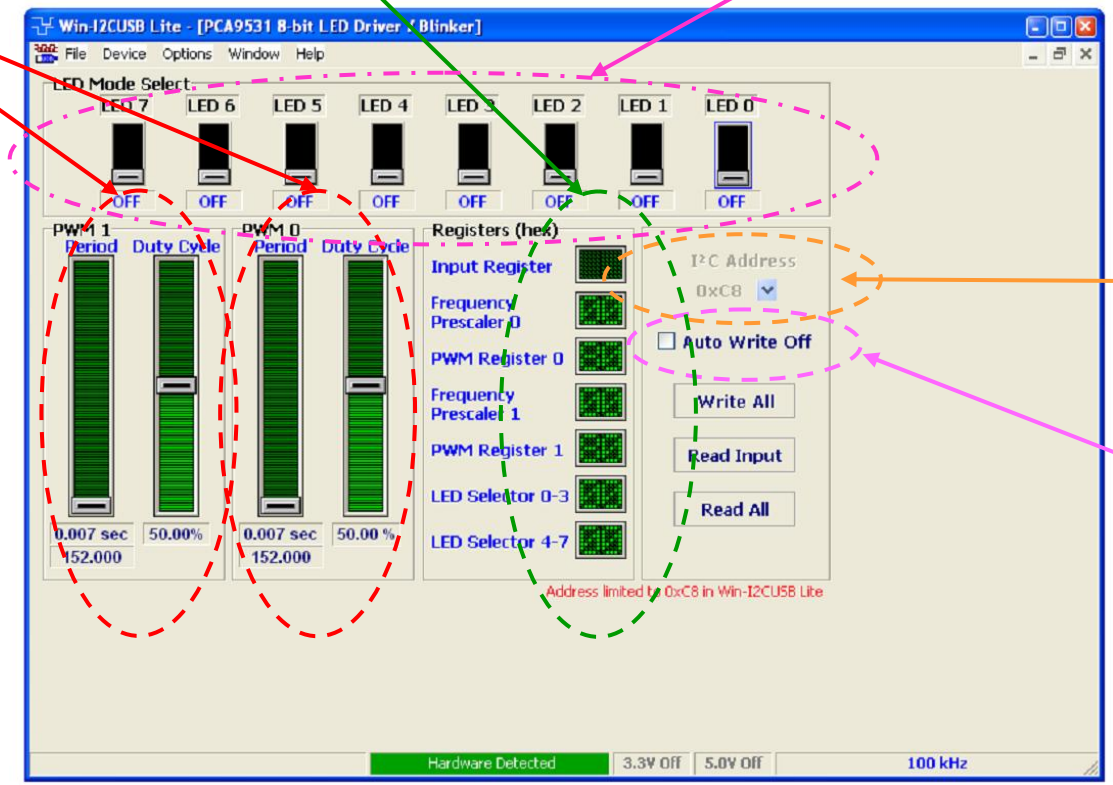

I²C address:
PCA9551 = 0xC0
PCA9531 = 0xC8

Auto Write Feature

Hands-On: RGB Color mixing using the 2 PCA9531 devices and the PCA9543A

1. Power sequence the board → Board OFF then ON

2. a) Open the PCA9531 GUI:
   Device → LED Blinkers and Dimmers → PCA9531 8-bit LED Dimmer
   b) Open the PCA9543A GUI:
   Device → Multiplexers/Switches → PCA9543A 2-channel switch with Interrupt Logic

   Reminder – Architecture (see slide PCA9531 Hardware introduction):
   a) The 2 PCA9531 have the same I^2C address and the PCA9543A allows to select one or the other (or both)
   b) The RGB LED is connected as following:
   - Red: LED4 of PCA9531 Device 1 (PCA9543A Channel 0)
   - Green: LED5 of PCA9531 Device 1 (PCA9543A Channel 0)
   - Blue: LED4 of PCA9531 Device 2 (PCA9543A Channel 1)

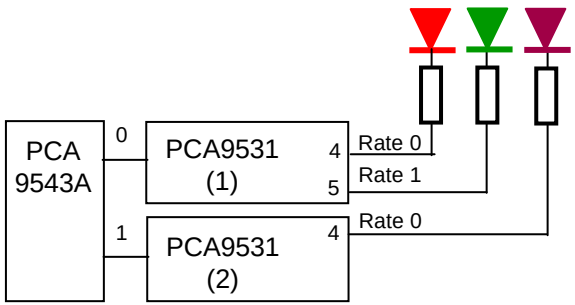

3. Use the PCA9543A and PCA9531 GUIs to control individually the 3 LEDs

Hands-On: RGB Color mixing using the 2 PCA9531 devices and the PCA9543A

- When it is understood how the RGB LEDs are controlled, program the two PCA9531 devices to display a “not too bright purple color” using the right amount of Red, Green and Blue

  (Hint: Use the PCA9543A (Switch) and PCA9531 GUIs to control individually the 3 LEDs)

- Blink the LEDs displaying purple color
- Now, program the two PCA9531 devices to display a “not too bright yellow color”.
- Blink the LEDs displaying Yellow color

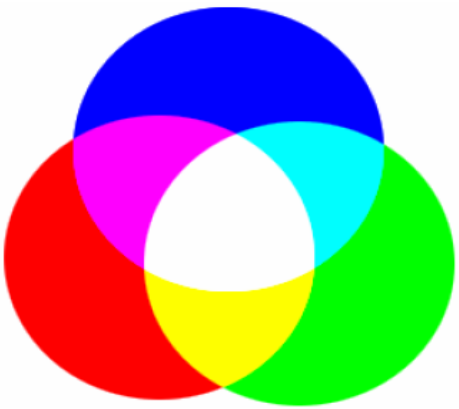

Hands-On 3: Using the Expert Mode

- Write the following I^{2}C sequences (Red) using the Expert Mode and execute it step by step

1. Connect Jumpers SDA and SCL to Master 0 (Higher position) and enable Jumper JP15 (INT_IN) → LED INT_IN should be ON
2. Power sequence the board → Board OFF then ON
3. Write to the PCA9551 to have LED0/LED3 blinking at 1 Hz, 50% duty cycle and LED1/LED2 blinking at 2 Hz, 50 % duty cycle
4. Write to the 2 PCA9531 to have the 8 discrete blinking at 1 Hz, 50 % duty cycle and the RGB LED displaying a white color
5. Run the sequence above during 2s
6. Reset the 2 PCA9531 and the PCA9551 during 2s
7. Clear the reset conditions and loop back to the 1st instruction

- Hints , methodology and Technical Information:
  - Use the GUI's to define the register values (easier than calculating with the formulas)
  - Resets are active low
  - PCA9551 Reset line controlled by I/O0 ; PCA9531 Reset line controlled by I/O4

1= AUTO INCREMENT

CONTROL REGISTER DEFINITION

0	0	0	AI	0	B2	B1	B0	REGISTER NAME	TYPE	REGISTER FUNCTION
0	0	0	AI	0	0	0	0	INPUT	READ	INPUT REGISTER
0	0	0	AI	0	0	0	1	PSC0	READ/ WRITE	FREQUENCY PRESCALER 0
0	0	0	AI	0	0	1	0	PWM0	READ/ WRITE	PWM REGISTER 0
0	0	0	AI	0	0	1	1	PSC1	READ/ WRITE	FREQUENCY PRESCALER 1
0	0	0	AI	0	1	0	0	PWM1	READ/ WRITE	PWM REGISTER 1
0	0	0	AI	0	1	0	1	LS0	READ/ WRITE	LED0–LED3 SELECTOR
0	0	0	AI	0	1	1	0	LS1	READ/ WRITE	LED4–LED7 SELECTOR

PSC0 — FREQUENCY PRESCALER 0[1]

bit	7	6	5	4	3	2	1	0
default	1	1	1	1	1	1	1	1

PSC0 is used to program the period of the PWM output.

$$\text{The period of BLINK0} = \frac{(\text{PSC0} + 1)}{38}$$

PWM0 — PWM REGISTER 0

bit	7	6	5	4	3	2	1	0
default	1	0	0	0	0	0	0	0

The PWM0 register determines the duty cycle of BLINK0. The outputs are HIGH (LED off) when the count is less than the value in PWM0 and HIGH when it is greater. If PWM0 is programmed with 00h, then the PWM0 output is always LOW.

$$\text{The duty cycle of BLINK0 is:} \quad \frac{256 - \text{PWM0}}{256}$$

LS0 — LED0–3 SELECTOR

	LED 3		LED 2		LED 1		LED 0	
bit	7	6	5	4	3	2	1	0
default	0	1	0	1	0	1	0	1

LS1 — LED4–7 SELECTOR

	LED 7		LED 6		LED 5		LED 4	
bit	7	6	5	4	3	2	1	0
default	0	1	0	1	0	1	0	1

The LSx LED select registers determine the source of the LED data.

00 = Output is set LOW (LED on)
01 = Output is set Hi-Z (LED off – default)
10 = Output blinks at PWM0 rate
11 = Output blinks at PWM1 rate