I2C 2005-1 Demonstration Board
EEPROM

Oct, 2006

PCF85116-3 EEPROM

- **EEPROM:**
  Electrically Erasable Programmable Read-Only Memory (EEPROM)

- EEPROM is a NONVOLATILE memory:
  Retains the stored information even when not powered

- Pin compatible with standard serial EEPROM devices (except pins 1,2 &3 are address pins on standard part)

- Applications: meter readings, electronic key, product identification number, Serial Presence Detect (SPD) on DIMMs

2048 × 8-bit CMOS EEPROM with I2C-bus interface (PCF85116-3)

Features:

- Low power CMOS: 1.0 mA (max. operating); 4 µA(typical standby)
- Non-volatile storage of 16 kbits organized as eight blocks of 256x8-bit each
- Single supply with full operation down to 2.7 V
- On-chip voltage multiplier
- Serial input/output I2C-bus (100 kbit/s standard-mode and 400 kbit/s fast-mode)
- Write operations: multi-byte write mode up to 32 bytes
- Write-protection input
- Read operations: sequential or random read
- Endurance: 1,000,000 Erase/Write (E/W) cycles
- 20 years non-volatile data retention time (minimum)
- Offered in DIP and SO packages

EEPROM Pin out

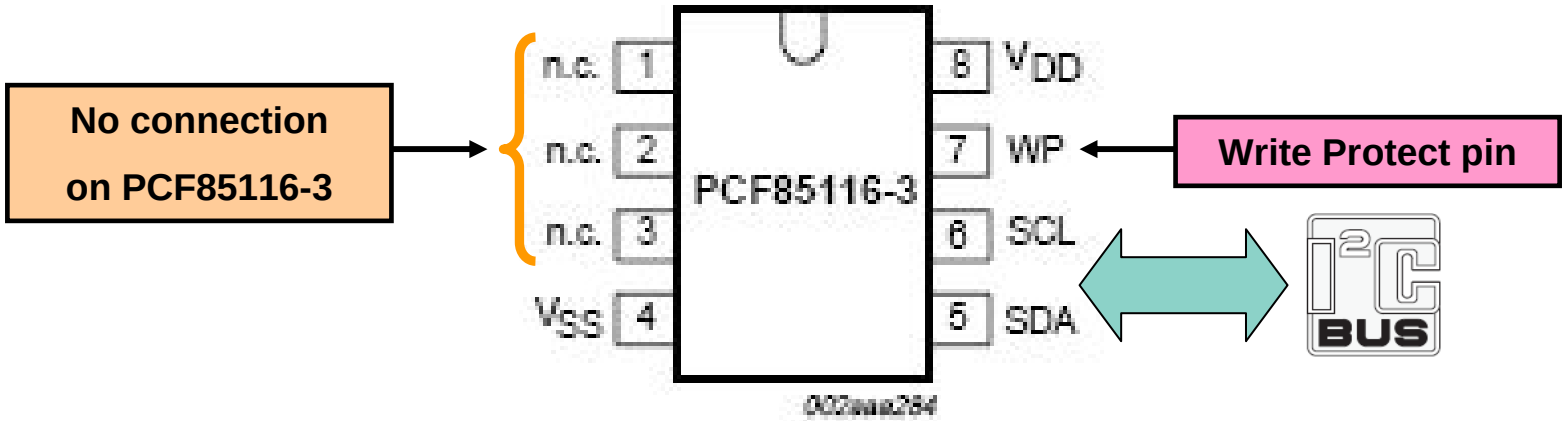

When WP pin is Logic level HIGH, data in EEPROM are protected:

- Data sent to EEPROM not acknowledged
- Data in EEPROM cannot be changed

Memory Organization

- Non-volatile storage of 16 kbits organized as 8 blocks
- Each Block has 256 bytes
- Word address selects one of 256 bytes
- Bits B1, B2, B3 select one of 8 blocks

Device address

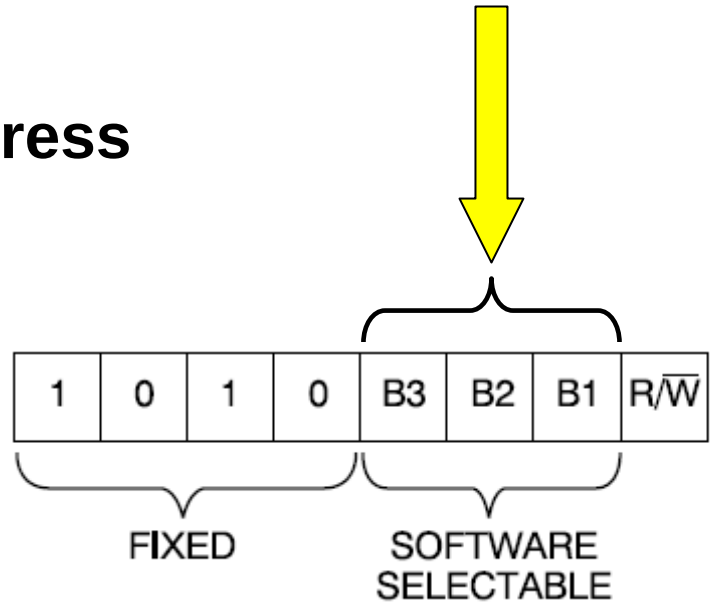

Memory Organization and Addressing

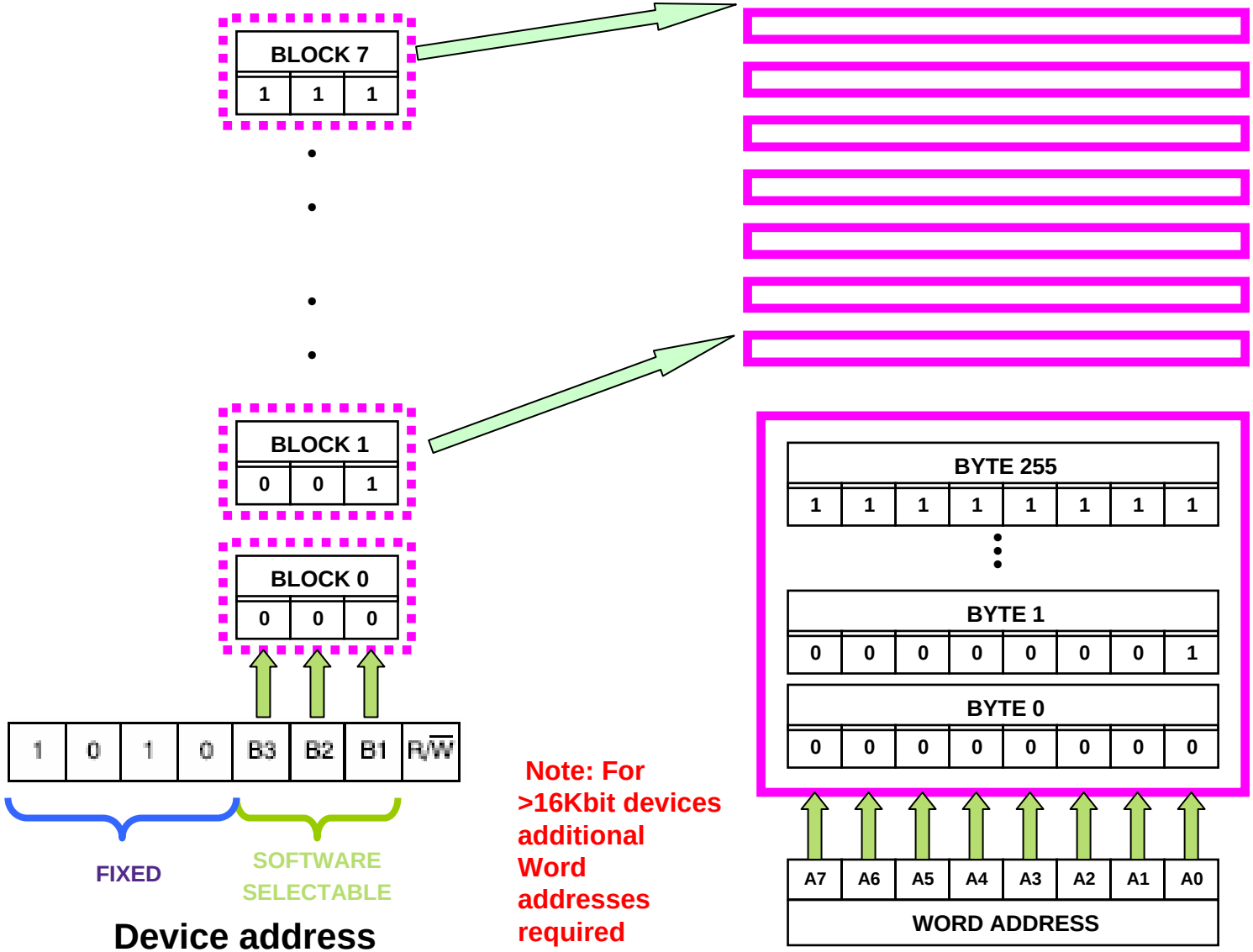

Note: For >16Kbit devices additional Word addresses required

Memory Operations

Write Operations

- Byte write with delay
- Byte write with polling scheme
- Page write

Read Operations

- Current address byte read
- Random byte read
- Sequential byte read

Byte Write with Delay

Byte Write operation consists of

- **Start condition**
- **Device address**
- **Word address byte**
- **Data byte**
- **Stop condition**

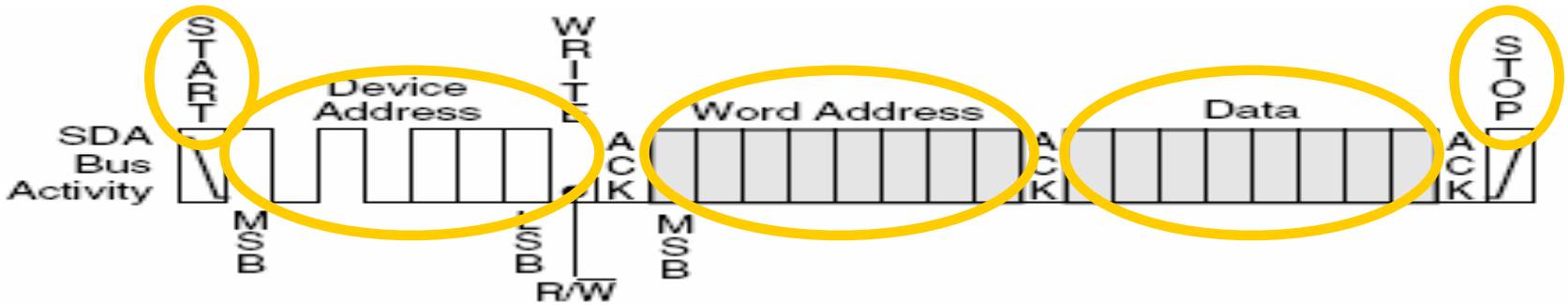

Byte Write with Polling Scheme

Byte Write with ACK polling operation consists of

- **Start condition**
- **Address byte**
- **Word Address**
- **Data byte**
- **Stop condition**
- **Repeat sending Address until ACK received**

Byte Write with polling scheme (continued)

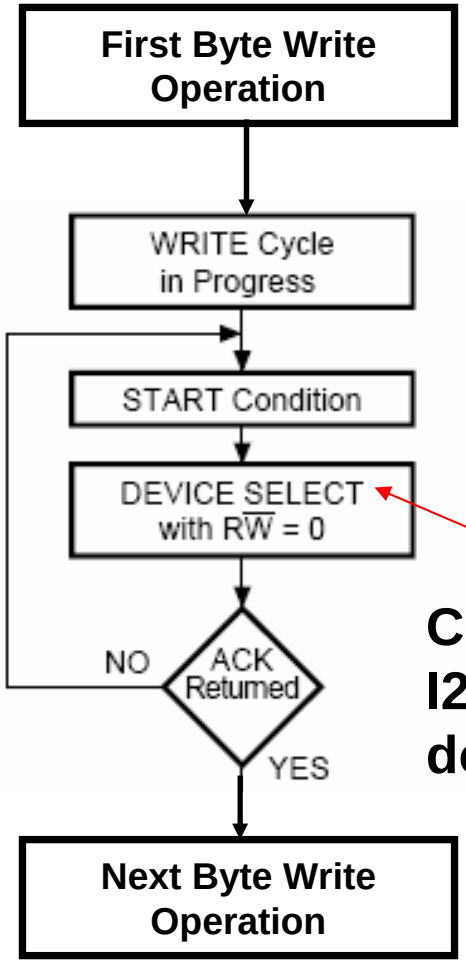

Comment JMI: usually called I2C address in all our documents

Page Write

Page Write operation consists of

- Start condition
- Address byte
- Word Address
- Data byte(s)
- More data bytes up to total bytes/page (32 bytes)
- Stop condition

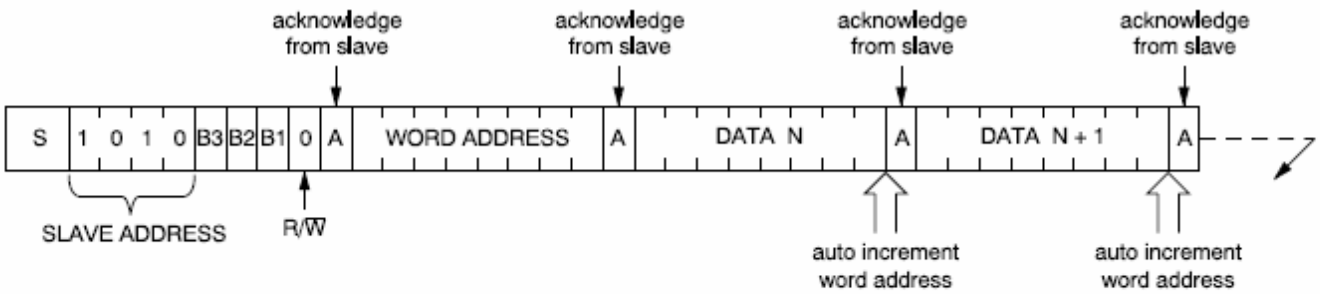

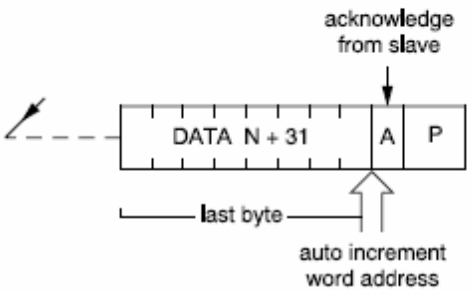

Random Byte Read

Random Byte Read operation consists of

- Start condition
- Device address
- Word address
- Start condition
- Device address
- Read byte data
- Set NACK bit
- Stop condition

Byte Random Read

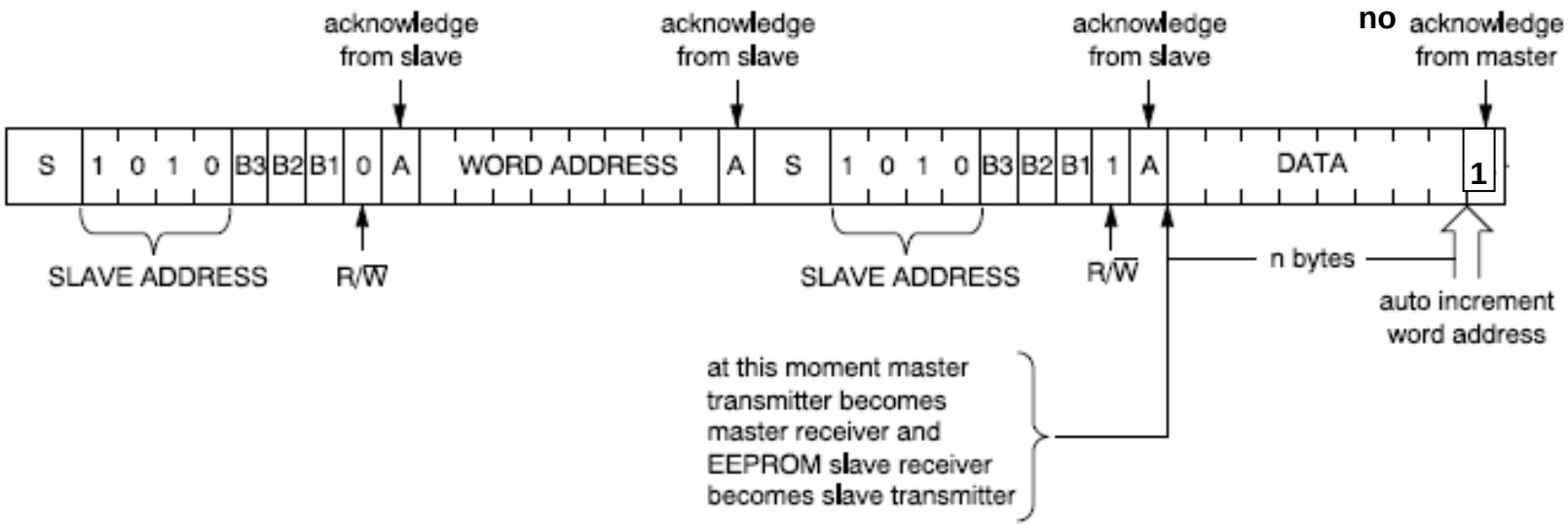

Current Address Byte Read

Current Address Byte operation consists of

- **Start condition**
- **Device Address**
- **Read byte data**
- **NACK bit**
- **Stop condition**

Note: This operation assumes that the current address is known or was set in a previous operation

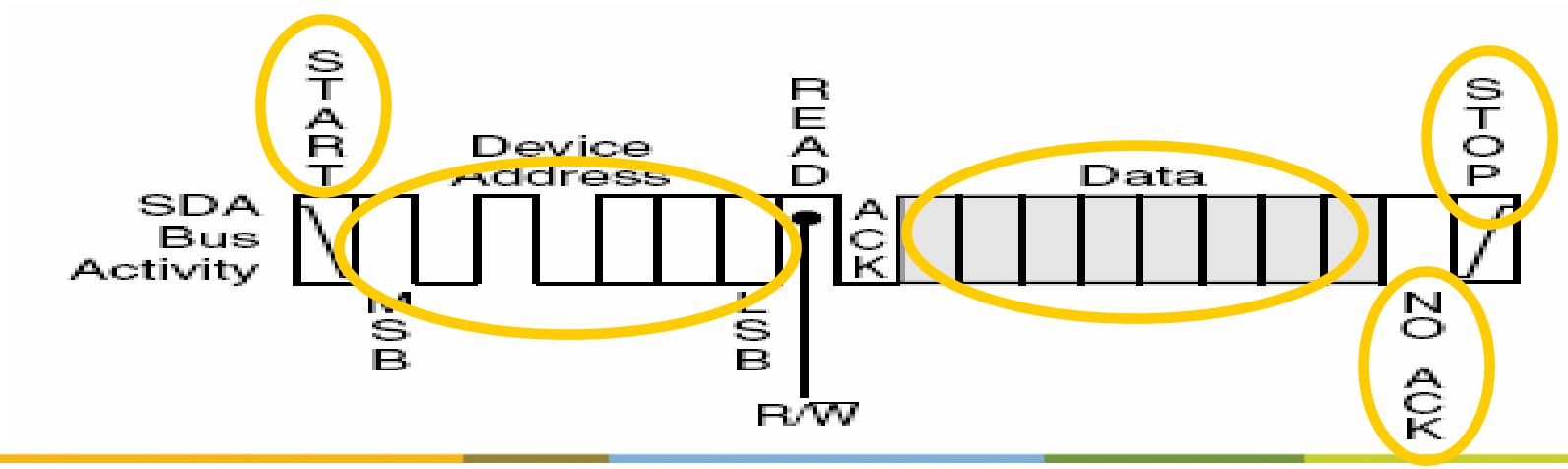

Sequential Read

Sequential Read operation consists of:

- **Start condition**
- **Device address**
- **Word address**
- **Start condition**
- **Device address**
- **Read byte data**
- **Set ACK bit, Read byte data, Repeat until n bytes read**
- **Set NACK bit after final data byte is read**
- **Stop condition**

Sequential Read

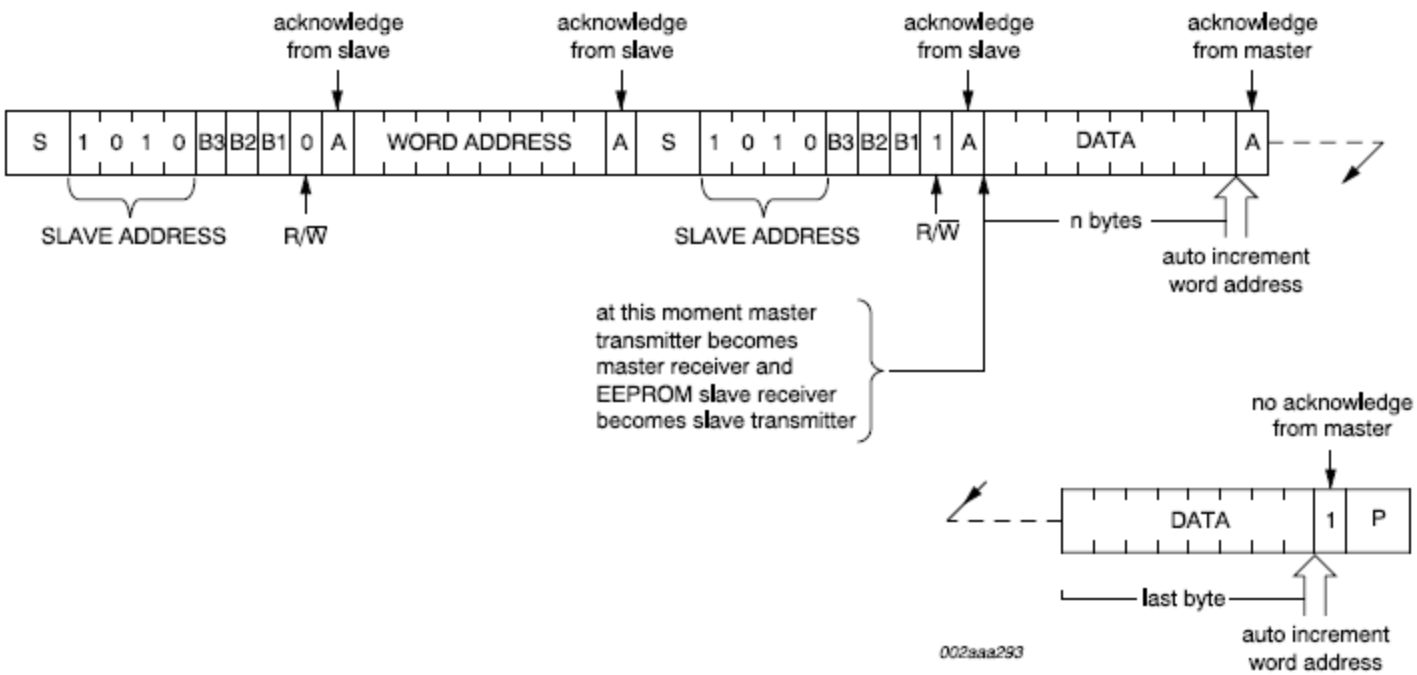

EEPROM Selection Chart

	PCA8581 PCA8581C	PCF8582C-2 PCF85102C-2 PCF85103C-2	PCF8594C-2	PCF8598C-2	PCA24S08	PCF85116-3
Power Supply	4.5 to 5.5V 2.5 to 6V	2.5 to 6V	2.5 to 6V	2.5 to 6V	2.5 to 3.6V	2.7 to 5.5V
Address pins	3	3	2	1	0	0
# of Block (256 bytes)	0.5	1	2	4	8 (128 bytes)	8
# of Bits	1K	2K	4K	8K	8K	16K
Data retention time	10 years	10 years	10 years	10 years	10 years	20 years
Temperature range	-25 to +85°C	-40 to +85°C	-40 to +85°C	-40 to +85°C	-40 to +85°C	-40 to +85°C
Clock Frequency	100kHz	100kHz	100kHz	100kHz	400kHz	400kHz

PCF85116-3 Training Board Schematic

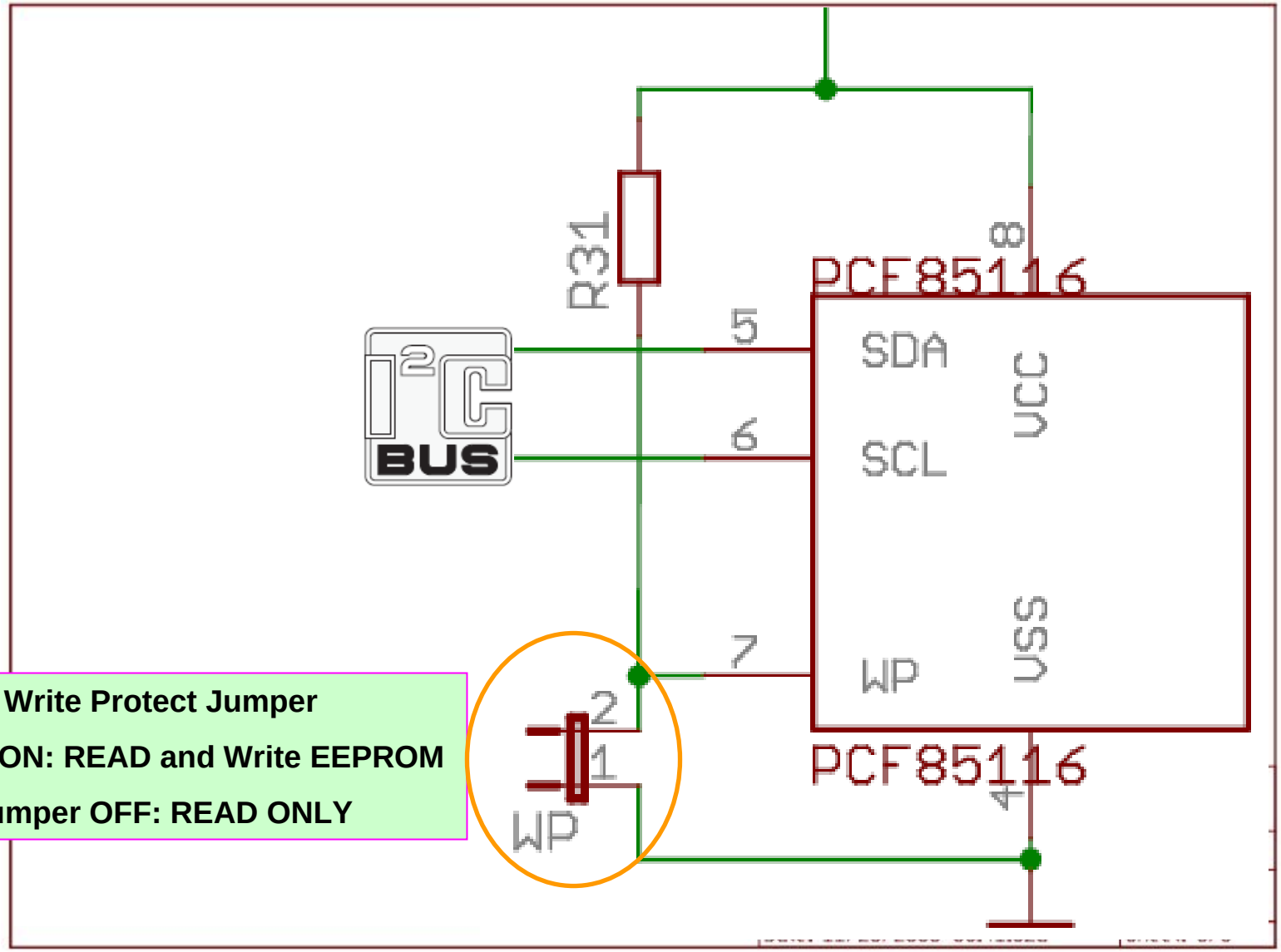

Write Protect Jumper

Jumper ON: READ and Write EEPROM

Jumper OFF: READ ONLY

PCF85116-3 On Training Board

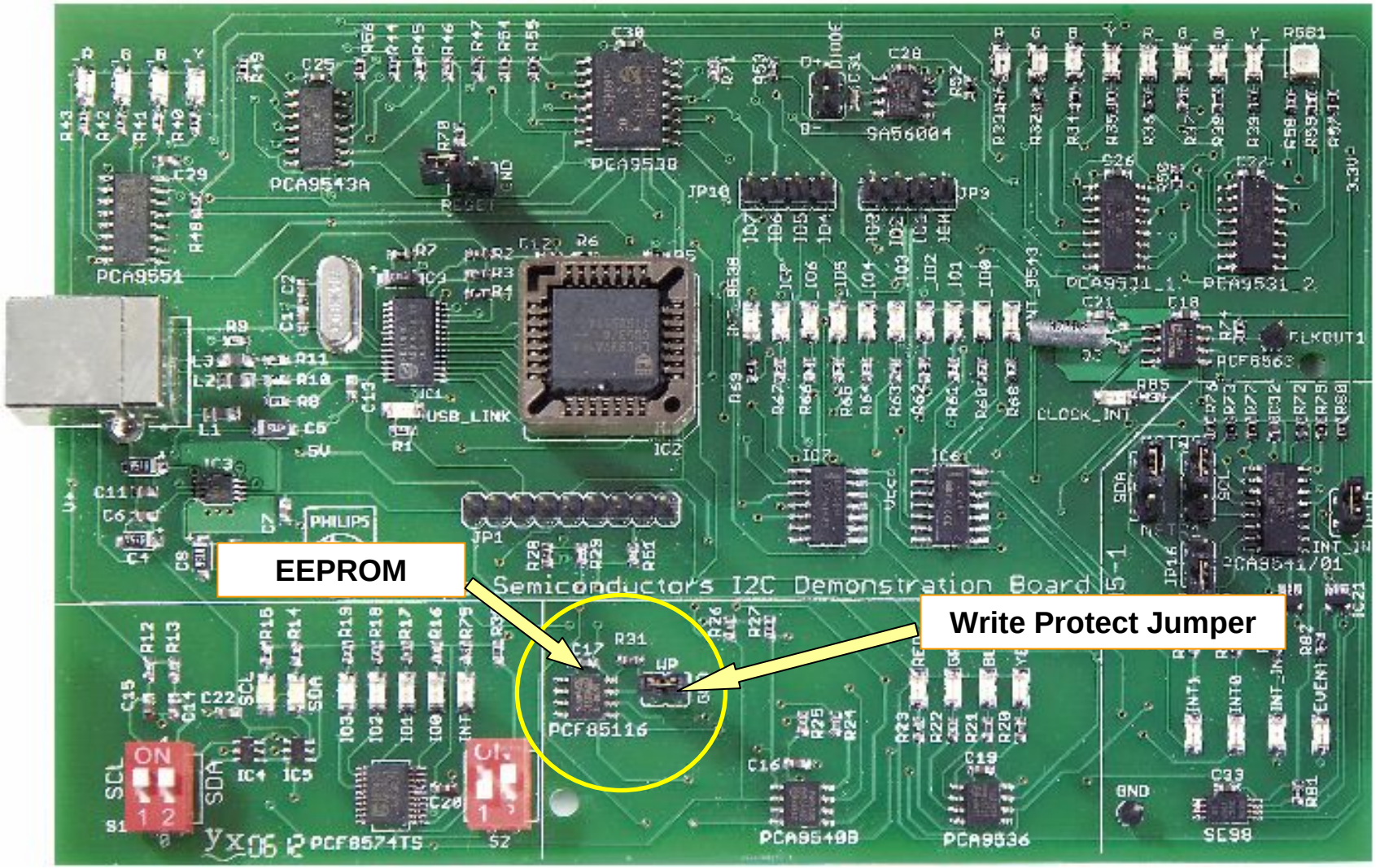

Accessing PCF85116-3

Channel 1 of PCA9540B MUX Must be enabled to access EEPROM

Hint: Use I2C Message: E0h, 05h

E0h //Select I2C slave with address E0h

05h //Enable channel 1

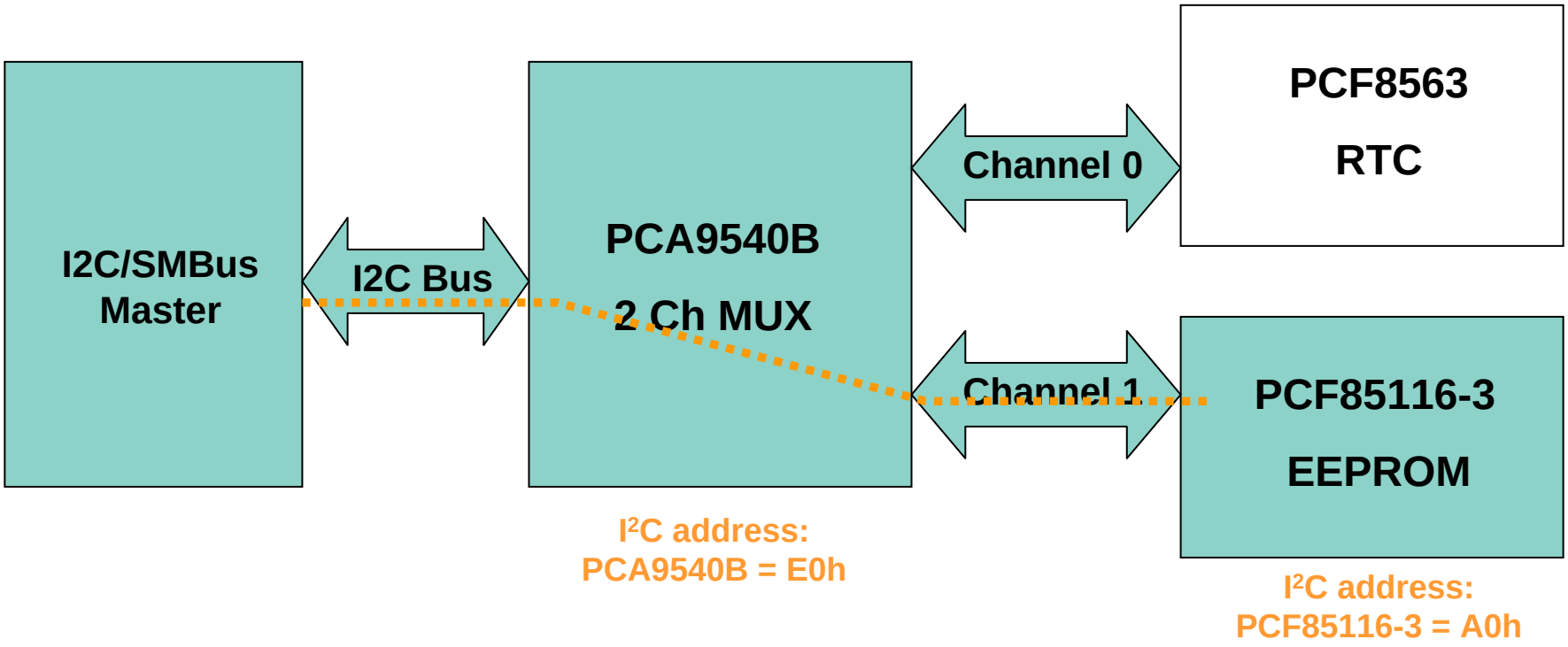

EEPROM – Software GUI

Device → EEPROM → 2k x 8 (16kbit)

I²C address:
PCF85116-3 = A0h

Write delay

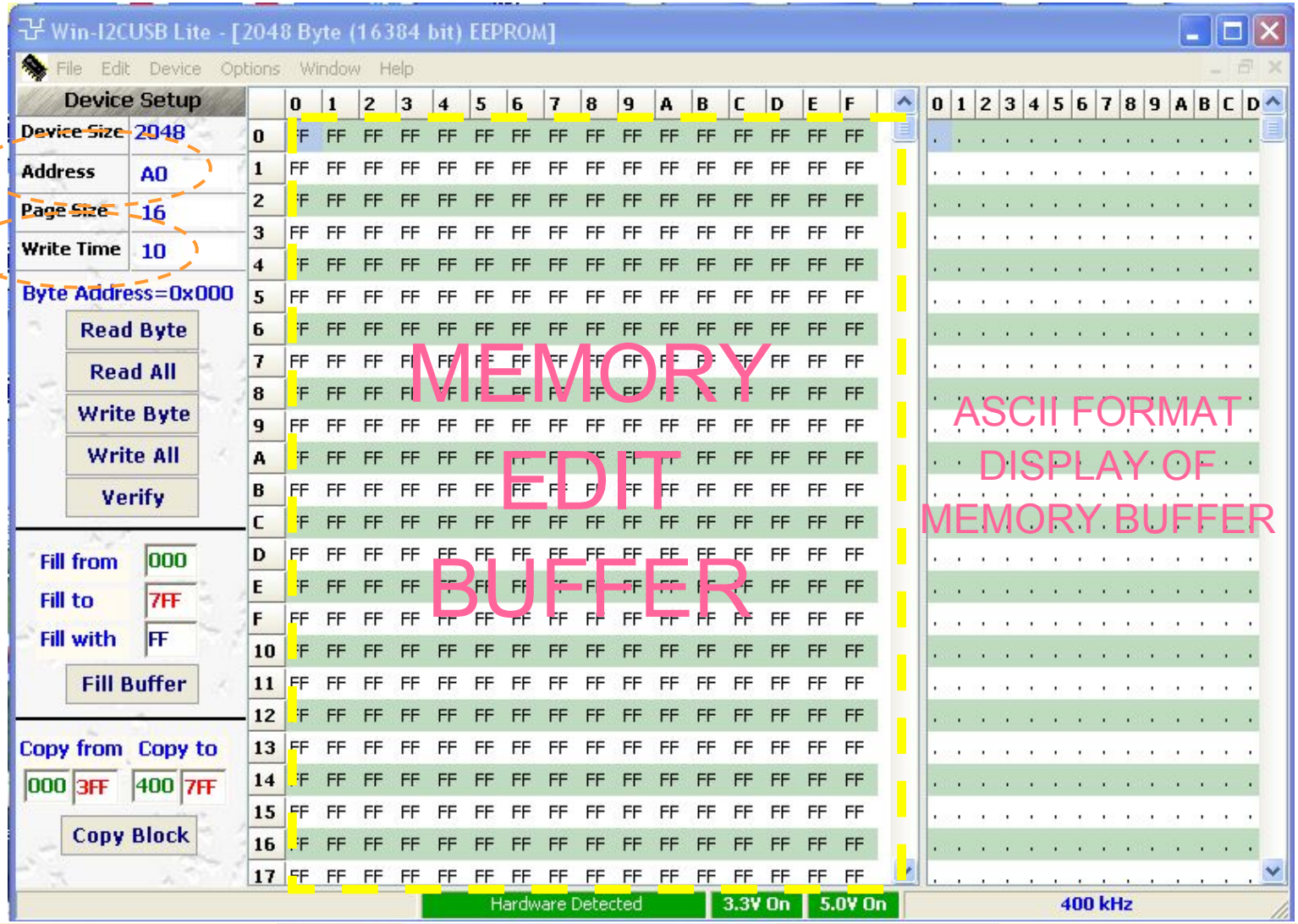

EEPROM Hands-on

Exercise #1

- With WP jumper on, power cycle the board
- Program and store your first name starting at address 031h
- Copy your name to location starting at 100h
- Power cycle the board
- Which locations show your name?

Exercise #2

- Fill buffer with 78h from address 010h to 17Fh
- Program/write all locations
- Use verify feature to check EEPROM contents
- Power cycle the board
- Do you find your name now?

EEPROM Hands-on

Exercise #3

- Do steps in Exercise#1.
- Now, pull WP jumper off. Power cycle the board.
- Fill buffer with 78h from address 010h to 17Fh
- Try to write/program to all locations
- What do you find?

EEPROM Hands-on

Exercise #4

- Run the Self Test mode (program the EEPROM to the correct values)
- Power cycle the board
- Remove the WP jumper so that EEPROM data can‘t be corrupted during the exercice
- Now, select Expert Mode using GUI
- Write the I2C sequence to enable the path to the EEPROM
- Write the I2C sequence that would read 8 bytes starting at location 320h
- Write the 8 bytes that have been read as an I2C sequence with the 1st byte being the I2C address and the 7 others the data
- Observe what this I2C sequence does