HP 75000 SERIES C

64-Channel Scanning A/D
HP E1413A

Service Manual

Serial Numbers

The information in this manual applies directly to HP E1413A 64-Channel Scanning A/Ds with serial number prefixes 3313A.

HEWLETT® PACKARD

Manual Part Number: E1413-90010
Microfiche Part Number: E1413-99010

Printed: January 1994 Edition 1
Printed in U.S.A. E0194

CERTIFICATION

Hewlett-Packard Company certifies that this product met its published specifications at the time of shipment from the factory. Hewlett-Packard further certifies that its calibration measurements are traceable to the United States National Institute of Standards and Technology (formerly National Bureau of Standards), to the extent allowed by that organization's calibration facility, and to the calibration facilities of other International Standards Organization members.

WARRANTY

This Hewlett-Packard product is warranted against defects in materials and workmanship for a period of three years from date of shipment. Duration and conditions of warranty for this product may be superseded when the product is integrated into (becomes a part of) other HP products. During the warranty period, Hewlett-Packard Company will, at its option, either repair or replace products which prove to be defective.

For warranty service or repair, this product must be returned to a service facility designated by Hewlett-Packard (HP). Buyer shall prepay shipping charges to HP and HP shall pay shipping charges to return the product to Buyer. However, Buyer shall pay all shipping charges, duties, and taxes for products returned to HP from another country.

HP warrants that its software and firmware designated by HP for use with a product will execute its programming instructions when properly installed on that product. HP does not warrant that the operation of the product, or software, or firmware will be uninterrupted or error free.

LIMITATION OF WARRANTY

The foregoing warranty shall not apply to defects resulting from improper or inadequate maintenance by Buyer, Buyer-supplied products or interfacing, unauthorized modification or misuse, operation outside of the environmental specifications for the product, or improper site preparation or maintenance.

The design and implementation of any circuit on this product is the sole responsibility of the Buyer. HP does not warrant the Buyer's circuitry or malfunctions of HP products that result from the Buyer's circuitry. In addition, HP does not warrant any damage that occurs as a result of the Buyer's circuit or any defects that result from Buyer-supplied products.

NO OTHER WARRANTY IS EXPRESSED OR IMPLIED. HP SPECIFICALLY DISCLAIMS THE IMPLIED WARRANTIES OF MERCHANTABILITY AND FITNESS FOR A PARTICULAR PURPOSE.

EXCLUSIVE REMEDIES

THE REMEDIES PROVIDED HEREIN ARE BUYER'S SOLE AND EXCLUSIVE REMEDIES. HP SHALL NOT BE LIABLE FOR ANY DIRECT, INDIRECT, SPECIAL, INCIDENTAL, OR CONSEQUENTIALDAMAGES, WHETHER BASED ON CONTRACT, TORT, OR ANY OTHER LEGAL THEORY.

NOTICE

The information contained in this document is subject to change without notice. HEWLETT-PACKARD (HP) MAKES NO WARRANTY OF ANY KIND WITH REGARD TO THIS MATERIAL, INCLUDING, BUT NOT LIMITED TO, THE IMPLIED WARRANTIES OF MERCHANTABILITY AND FITNESS FOR A PARTICULAR PURPOSE. HP shall not be liable for errors contained herein or for incidental or consequential damages in connection with the furnishing, performance or use of this material. HP assumes no responsibility for the use or reliability of its software on equipment that is not furnished by HP.

Restricted Rights Legend

Use, duplication, or disclosure by the Government is subject to restrictions as set forth in subdivision (b)(3)(ii) of the Rights in Technical Data and Computer Software clause at 52.227-7013. Hewlett-Packard Company; 3000 Hanover Street; Palo Alto, California 94304

Declaration of Conformity

According to ISO/IEC Guide 22 and EN 45014

The Hewlett-Packard Company declares that the HP E1413A conforms to the following Product Specifications.

Safety: IEC 1010-1 (1990) Incl. Amend 1 (1992)/EN61010 (1993)
CSA C22.2 #1010.1 (1992)
UL 1244

EMC: CISPR 11:1990/EN 55011 (1991): Group1 Class A
IEC 801-2:1991/EN 50082-1 (1992): 4kVCD, 8kVAD
IEC 801-3:1984/EN 50082-1 (1992): 3 V/m
IEC 801-4:1988/EN 50082-1 (1992): 1kV Power Line

Supplementary Information: The product herewith complies with the requirements of the low voltage Directive 73/23/EEC and the EMC Directive 89/336/EEX.
Tested in a typical configuration in an HP C-Size VXI mainframe.

Q.A. Manager
January 1994

Hewlett-Packard Company
P.O. Box 301
815 14th Street S.W.
Loveland, Colorado 80539 U.S.A

Printing History

The Printing History shown below lists all Editions and Updates of this manual and the printing date(s). The first printing of the manual is Edition 1. The Edition number increments by 1 whenever the manual is revised. Updates, which are issued between Editions, contain replacement pages to correct the current Edition of the manual. Updates are numbered sequentially starting with Update 1. When a new Edition is created, it contains all the Update information for the previous Edition. Each new Edition or Update also includes a revised copy of this printing history page. Many product updates or revisions do not require manual changes and, conversely, manual corrections may be done without accompanying product changes. Therefore, do not expect a one-to-one correspondence between product updates and manual updates.

Edition 1 (Part Number E1413-90010) ..... January 1994

Safety Symbols

⚠	Instruction manual symbol affixed to product. Indicates that the user must refer to the manual for specific Warning or Caution information to avoid personal injury or damage to the product.
⏚	Indicates the field wiring terminal that must be connected to earth ground before operating the equipment—protects against electrical shock in case of fault.
⏚ OR ⊥	Frame or chassis ground terminal—typically connects to the equipment's metal frame.
∼	Alternating current (AC).
⎓	Direct current (DC).
ϟ	Indicates hazardous voltages.
WARNING	Calls attention to a procedure, practice, or condition that could cause bodily injury or death.
CAUTION	Calls attention to a procedure, practice, or condition that could possibly cause damage to equipment or permanent loss of data.

WARNINGS

The following general safety precautions must be observed during all phases of operation, service, and repair of this product. Failure to comply with these precautions or with specific warnings elsewhere in this manual violates safety standards of design, manufacture, and intended use of the product. Hewlett-Packard Company assumes no liability for the customer's failure to comply with these requirements.

Ground the equipment: For Safety Class 1 equipment (equipment having a protective earth terminal), an uninterruptible safety earth ground must be provided from the mains power source to the product input wiring terminals or supplied power cable.

DO NOT operate the product in an explosive atmosphere or in the presence of flammable gases or fumes.

For continued protection against fire, replace the line fuse(s) only with fuse(s) of the same voltage and current rating and type. DO NOT use repaired fuses or short-circuited fuse holders.

Keep away from live circuits: Operating personnel must not remove equipment covers or shields. Procedures involving the removal of covers or shields are for use by service-trained personnel only. Under certain conditions, dangerous voltages may exist even with the equipment switched off. To avoid dangerous electrical shock, DO NOT perform procedures involving cover or shield removal unless you are qualified to do so.

DO NOT operate damaged equipment: Whenever it is possible that the safety protection features built into this product have been impaired, either through physical damage, excessive moisture, or any other reason, REMOVE POWER and do not use the product until safe operation can be verified by service-trained personnel. If necessary, return the product to a Hewlett-Packard Sales and Service Office for service and repair to ensure that safety features are maintained.

DO NOT service or adjust alone: Do not attempt internal service or adjustment unless another person, capable of rendering first aid and resuscitation, is present.

DO NOT substitute parts or modify equipment: Because of the danger of introducing additional hazards, do not install substitute parts or perform any unauthorized modification to the product. Return the product to a Hewlett-Packard Sales and Service Office for service and repair to ensure that safety features are maintained.

HP 75000 Series C Service Documentation

Suggested Sequence to Use Manuals

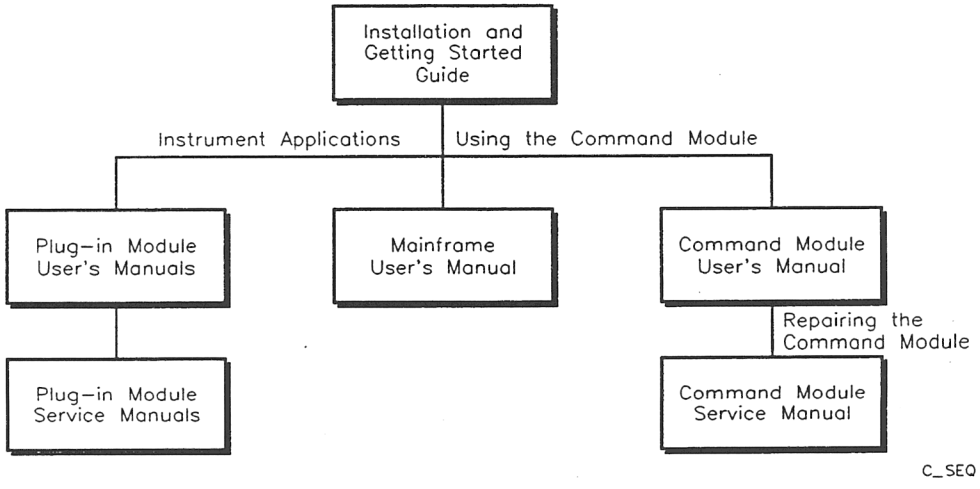

Manual Descriptions

Title	Description
Series C Installation and Getting Started Guide	Step-by-step instructions for all aspects of plug-in module, mainframe, and command module installation. Also contains programming information and examples.
Mainframe User's Manual	Information to prepare the mainframe and to install plug-in modules.
Command Module User's Manual	Programming information for the command module and general programming information for instruments installed in the mainframe.
Command Module Service Manual	Command module service information. Includes information and procedures for functional verification, operation verification, performance verification, troubleshooting, and repair.
Plug-In Module User's Manuals	Plug-in module programming and configuration information. Contains programming examples and SCPI command reference for the module.
Plug-In Module Service Manuals	Plug-in module service information. Depending on the module, includes information and procedures for functional verification, operation verification, performance verification, adjustment, troubleshooting, and repair.

What's in this Manual

Manual Overview

This manual shows how to service the HP E1413A 64-Channel Scanning A/D and associated Signal Conditioning Plug-Ons (SCPs). See the *HP E1413A User's Manual* for additional information on installing, configuring, and operating the instrument. Consult the appropriate mainframe manual for information on configuring and operating the mainframe.

Manual Content

Chap	Title	Content
1	General Information	Lists basic instrument descriptions, tools and test equipment required for service, and procedures to inspect and ship the instrument.
2	Verification Tests	Describes functional, operational, and performance verification tests for the instrument.
3	Adjustments	Shows how to perform A/D adjustments for the instrument.
4	Replaceable Parts	Lists part numbers of replaceable parts for the instrument. Also includes information to order spare parts and to exchange/replace instruments.
5	Service	Procedures to aid in fault isolation and repair of the instrument.
A	Calculating Scanning A/D Accuracy	Shows how to calculate instrument accuracy, test equipment uncertainty, and test accuracy ratio (TAR).
B	Error Messages	Lists error messages for the instrument.
C	Command Reference	Summarizes the CALibration subsystem commands for the Scanning A/D and describes Common Commands for the instrument.

Contents

Chapter 1 - General Information

Introduction 1-1
Safety Information 1-2
Scanning A/D Description 1-3
Inspection/Shipping 1-6
Recommended Test Equipment 1-8

Chapter 2 - Verification Tests

Introduction 2-1
  Test Conditions/Procedures 2-1
  Performance Test Record 2-1
  Verification Test Examples 2-1
Functional Verification 2-2
  Test F-1: Scanning A/D Self-Test 2-2
  Test F-2: A/D Overrange Detection 2-4
  Test F-3: Open Transducer Detection 2-7
Operation Verification 2-10
Performance Verification 2-10
  Test 2-1: DCV Accuracy - Option 11 2-11
  Test 2-2: DCV Accuracy - Option 12 2-17
  Test 2-3: DCV Accuracy - Option 13 2-21
Performance Test Record 2-28

Chapter 3 - Adjustments

Introduction 3-1
A/D Adjustment Procedure 3-2

Chapter 4 - Replaceable Parts

Introduction 4-1
Exchange Modules 4-1
Replaceable Parts Lists 4-1
Component Locators 4-3

Chapter 5 - Service

Introduction 5-1
Recommended Repair Strategy 5-1
Troubleshooting Guidelines 5-2
Disassembly 5-5
Repair/Maintenance Guidelines 5-8

A - Calculating Scanning A/D Accuracy

Introduction A-1
Scanning A/D Accuracy Calculations A-2
Measurement Uncertainty Calculations A-4
Test Accuracy Ratio (TAR) Calculations A-5

B - Error Messages

C - Command Reference

Introduction C-1
CALibration Commands C-1
Common Commands C-11

1
General Information

Introduction

This service manual contains information to test, troubleshoot, and repair the HP E1413A 64-Channel Scanning A/D (Scanning A/D) and associated Signal Conditioning Plug-Ons (SCPs). Figure 1-1 shows a typical E1413A Scanning A/D and the SCPs described in this manual.

NOTE

See "HP 75000 Series C Service Documentation", page iv, for a list of manuals that describe mainframe and command module operation and hardware. The information in this manual assumes you are familiar with HP E1413A operation. If incoming inspection is required, see "Inspection/Shipping" in this chapter.

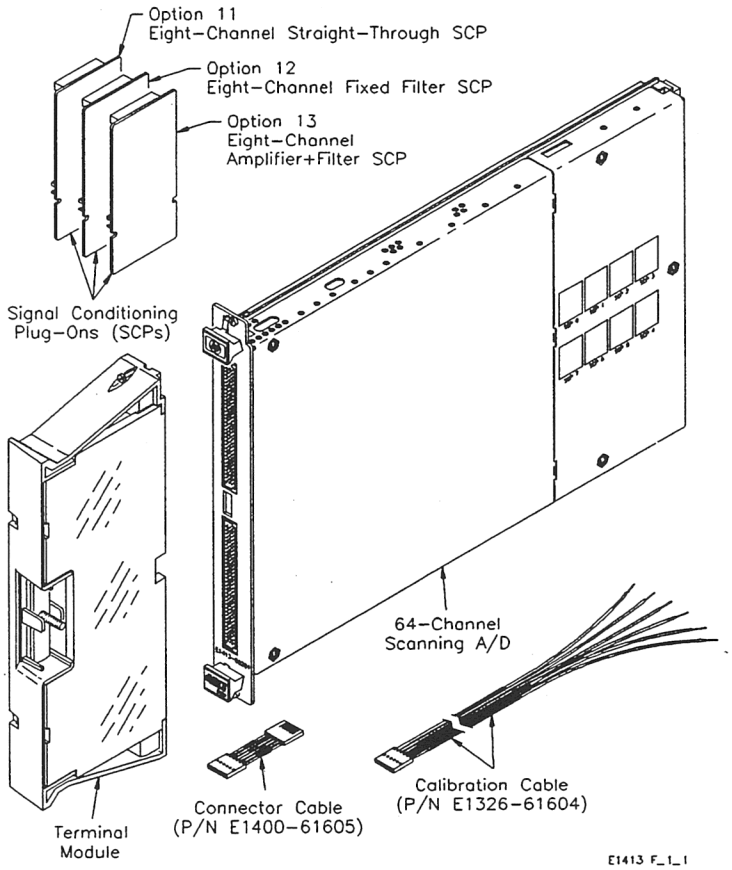

Figure 1-1. HP E1413A Scanning A/D Converter

Safety Information

The HP E1413A Scanning A/D is a Safety Class I instrument that is provided with a protective earth terminal when installed in the mainframe. Check the mainframe and all related documentation for safety markings and instructions before operating or servicing a Scanning A/D.

See the WARNINGS page (page iii) for a summary of safety information. Safety information to test and service the HP E1413A Scannng A/D follows and is also found throughout this manual.

WARNINGS

Follow the WARNINGS listed to avoid possible injury to yourself or others when operating, repairing, or servicing a Scanning A/D.

WARNING

SERVICE-TRAINED PERSONNEL ONLY. The information in this manual is for service-trained personnel who are familiar with electronic circuitry and are aware of the hazards involved. To avoid personal injury or damage to the instrument, do not perform procedures in this manual or do any servicing unless you are qualified to do so.

CHECK MAINFRAME POWER SETTINGS. Before applying power, verify that the mainframe setting matches the line voltage and the correct fuse is installed. An uninterruptible safety earth ground must be provided from the main power source to the supplied power cord set.

GROUNDING REQUIREMENTS. Interruption of the protective (grounding) conductor (inside or outside the mainframe) or disconnecting the protective earth terminal will cause a potential shock hazard that could result in personal injury. (Grounding one conductor of a two-conductor outlet is not sufficient protection.)

IMPAIRED PROTECTION. Whenever it is likely that instrument protection has been impaired, the mainframe must be made inoperative and be secured against any unintended operation.

REMOVE POWER IF POSSIBLE. Some procedures in this manual may be performed with power supplied to the mainframe while protective covers are removed. Energy available at many points may, if contacted, result in personal injury. (If service can be performed without power applied, remove the power.)

WARNING

USING AUTOTRANSFORMERS. If the mainframe is to be energized via an autotransformer (for voltage reduction) make sure the common terminal is connected to neutral (that is, the grounded side of the main's supply).

USE PROPER FUSES. For continued protection against fire hazard, replace the line fuse(s) only with fuses of the same current rating and type (such as normal blow, time delay, etc.). Do not use repaired fuses or short-circuited fuseholders.

CAUTIONS

Follow the CAUTIONS listed to avoid possible damage to the equipment when performing instrument operation, service, or repair.

CAUTION

MAXIMUM INPUT VOLTAGE/CURRENT. To avoid possible damage to the instrument, maximum input voltage (normal mode plus common mode) is ± 42 Vpeak. Maximum operating voltage is ± 16 Vpeak. Maximum current per channel or common: 100 mA DC or AC RMS.

STATIC ELECTRICITY. Static electricity is a major cause of component failure. To prevent damage to the electrical components in the Scanning A/D or SCPs, observe anti-static techniques when removing an HP E1413A from the mainframe or when handling an HP E1413A or SCP. Also, be sure to tighten the front panel screws when installing an HP E1413A in a mainframe slot.

Scanning A/D Description

The HP E1413A Scanning A/D Converter is a VXIbus C-Size, register-based instrument. The Scanning A/D can operate in a C-Size VXIbus mainframe using an HP E1406 Command Module and Standard Commands for Programmable Instruments (SCPI).

The instrument can measure DC voltage, resistance, temperature, and strain when appropriate Signal Conditioning Plug-Ons (SCPs) are installed on the instrument (see "Scanning A/D Options" for a list of SCPs). The Scanning A/D has 100 kHz scanning rate up to 100,000 readings/sec with full autozeroing and autocalibration. See *Chapter 5 - Service* for a block diagram description of the instrument.

Scanning A/D Specifications

See *Appendix A - Specifications* in the *HP E1413A User's Manual* for HP E1413A Scanning A/D specifications. These specifications are the performance standards or limits against which the instrument may be tested.

Scanning A/D Environment

The HP E1413A Scanning A/D and SCPs should be stored in a clean, dry environment. Recommended operating/storage environments for the HP E1413A Scanning A/D and SCPs are:

	Temperature	Relative Humidity
Operating Environment	0°C to +55°C	<65% (0°C to +40°C)
Storage/Shipment	-40°C to +75°C	<65% (0°C to +40°C)

Scanning A/D Serial Numbers

Figure 1-2 shows Hewlett-Packard serial number structure. HP E1413A Scanning A/Ds covered by this manual are identified by the serial number prefixes listed on the title page.

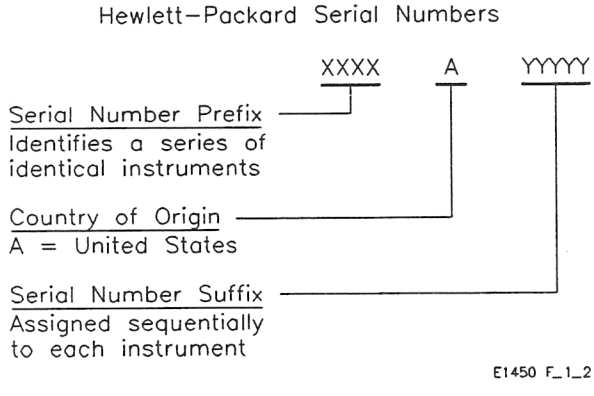

Figure 1-2. Hewlett-Packard Serial Numbers

Scanning A/D Options

Options for the HP E1413A Scanning A/D that are described in this manual include:

Option	Description
E1413A Opt 011	Eight-Channel Straight-Through SCP
E1413A Opt 012	Eight-Channel Fixed Filter SCP
E1413A Opt 013	Eight-Channel Amplifier+Filter SCP

Service Programs Disk

An *HP E1413A Service Programs* disk is shipped with this manual. The programs on the disk are in LIF format, with the program *filename* shown in line 10 of each program. To run a program, load the disk in the disk drive, select the disk drive as the primary drive, type LOAD "*filename*" and press RUN.

For example, to run the HP E1413A Self-Test (Test F-1 in Chapter 2), load the disk and type LOAD "SELFTEST". Then, press RUN to run the program. The following table summarizes *Service Programs* disk contents.

HP E1413A Service Programs

Chap	Category	*filename*	Description
2	Functional Verification Tests	SELFTEST	Performs a self-test of the Scanning A/D
		OVERRANG	Checks Scanning A/D overrange detection function
		OPENTRAN	Checks Scanning A/D open transducer detection (OTD) function
	Performance Verification Tests	PERF11	Tests DCV measurement accuracy using Option 11 SCP
		PERF12	Tests DCV measurement accuracy using Option 12 SCP
		PERF131	Tests DCV measurement accuracy using Option 13 SCP @ Gain X1
		PERF138	Tests DCV measurement accuracy using Option 13 SCP @ Gain X8
		PERF1364	Tests DCV measurement accuracy using Option 13 SCP @ Gain X64
3	Adjustments	ADJSPROC	Performs internal A/D adjustments for the Scanning A/D
5	Service	SERVTEST	Performs troubleshooting tests for the Scanning A/D

Inspection/ Shipping

This section shows initial (incoming) inspection and shipping guidelines for the HP E1413A Scanning A/D and associated SCPs.

Initial Inspection

Use the steps in Figure 1-3 as guidelines to perform initial (incoming) inspection of the HP E1413A Scanning A/D.

WARNING

To avoid possible hazardous electrical shock, do not perform electrical tests if there are signs of shipping damage to the shipping container or to the instrument.

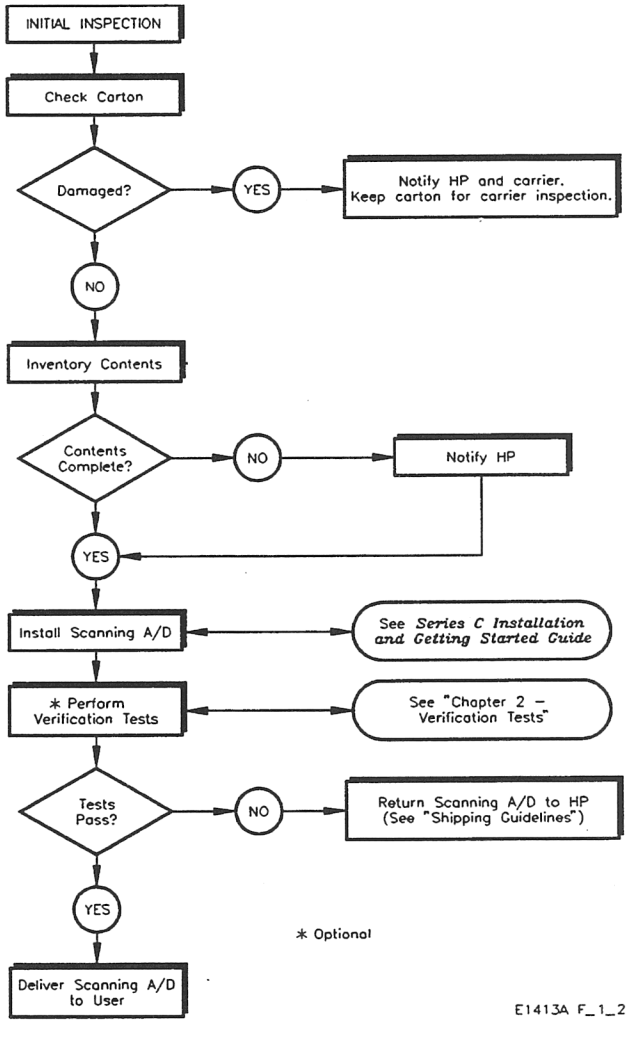

Figure 1-3. Initial (Incoming) Inspection Guidelines

Shipping Guidelines

Follow the steps in Figure 1-4 to return an HP E1413A Scanning A/D and/or SCPs to a Hewlett-Packard Sales and Support Office or to a Service Center.

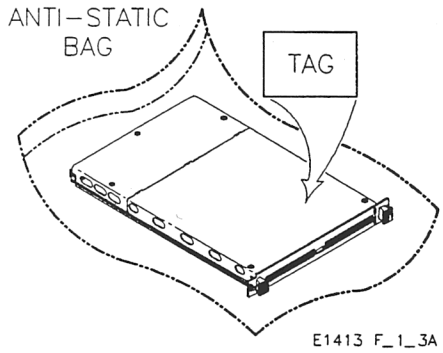

1 Remove Terminal Block/SCPs

- Remove SCP(s) from instrument*
- Remove terminal block from instrument

2 Prepare Instrument/SCP

- Attach tag to instrument that identifies
  - Owner
  - Model Number/Serial Number
  - Service Required
- Place tagged device in anti-static bag

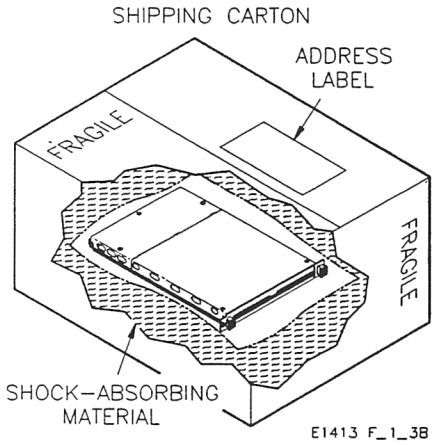

3 Package Instrument/SCP

- Place packaged instrument in shipping carton**
- Place 75 to 100 mm (3 to 4 inches) of shock-absorbing material around the device
- Seal the shipping carton securely
- Mark the shipping carton FRAGILE

4 Ship Instrument to Hewlett-Packard

- Place address label on shipping carton ***
- Send carton to Hewlett-Packard

* When returning an HP E1413A, first remove and save all installed SCPs. See *Chapter 5 - Service* for procedures to remove SCPs from the HP E1413A Scanning A/D.

** We recommend you use the same shipping materials as those used in factory packaging (available from Hewlett-Packard). For other (commercially-available) shipping materials, use a double-wall carton with minimum 2.4 MPa (350 psi) test.

*** See Sales and Support Offices at the back of this manual for shipping address.

Figure 1-4. Packaging/Shipping Guidelines

Recommended Test Equipment

See Table 1-1 for test equipment recommended to test and service the HP E1413A Scanning A/D and SCPs. Essential requirements for each piece of test equipment are listed in the *Requirements* column. You may substitute other equipment if it meets the requirements in Table 1-1.

Table 1-1. Recommended Test Equipment

Instrument	Requirements	Recommended Model	Use*
Controller, HP-IB	HP-IB compatibility as defined by IEEE Standard 488-1987 and the identical ANSI Standard MC1.1: SH1, AH1, T2, TE0, L2, LE0, SR0, RL0, PP0, DC0, DT0, and C1, 2, 3, 4, 5	HP 9000 Series 300	F,P
Mainframe	Compatible with HP E1405B or HP E1406A Command Module	HP HP E1401A (requires HP E1405B or E1406A)	F,P
Digital Multimeter	Voltage Range: ± 20 Vdc Resistance Range: 1 MΩ	HP 3458A	A,T
Voltage Source	Voltage Range: ± 20 Vdc	Datron 4708 Option 10	F,P

*A = Adjustments, F = Functional Verification Tests, P = Performance Verification Tests, T = Troubleshooting

2
Verification Tests

Introduction

The three levels of test procedures described in this chapter are used to verify that the HP E1413A Scanning A/D and associated Signal Conditioning Plug-Ons (SCPs):

- are functional (Functional Verification)
- meet selected testable specifications (Operation Verification)
- meet all testable specifications (Performance Verification)

WARNING

Do not perform any of the following verification tests unless you are a qualified, service-trained technician and have read the WARNINGS and CAUTIONS in Chapter 1.

Test Conditions/ Procedures

See Table 1-1 for test equipment requirements. You should complete the performance verification tests at least once a year. For heavy use or severe operating environments, perform the tests more often. For best results, the test environment temperature should be 23°C ± 1°C.

The verification tests assume that the person performing the tests understands how to operate the mainframe, the Scanning A/D, and specified test equipment. The test procedures do not specify equipment settings for test equipment, except in general terms. It is assumed that a qualified, service-trained technician will select and connect any cables, adapters, and probes required for the test.

Performance Test Record

The results of each performance verification test may be recorded in Table 2-1, *HP E1413A Performance Test Record*. This form can be copied, if desired.

Verification Test Examples

Each verification test includes an example program, and all example programs are on the *HP E1413A Service Programs* disk sent with this manual. All example programs assume the following:

- Controller is an HP 9000 Series 300 computer
- Programming language is HP BASIC
- Scanning A/D address is 70903 (logical address is 24)
- DMM is an HP 3458A at address 722

Functional Verification

The purpose of the functional verification tests is to verify that the Scanning A/D is functioning properly. No attempt is made to verify that the instrument is meeting specifications. Functional verification tests for the Scanning A/D include:

- Test F-1: Scanning A/D Self-Test
- Test F-2: A/D Overrange Detection
- Test F-3: Open Transducer Detection

NOTE

For a quick functional check of the A/D, perform only the Self-Test.

Test F-1: Scanning A/D Self-Test

Description

The self-test provides a high degree of confidence that the HP E1413A Scanning A/D is functional. The self-test may take several minutes to complete.

NOTE

During the first 5 minutes after power-on, the self-test may fail. Allow the Scanning A/D to warm up before running the self-test.

Test Procedure

1. Execute the self-test:

   *TST? *Self-test command*

2. Read the result. A "0" indicates that the test passed. Any other number returned indicates a self-test failure.

Example Program

This program performs a self-test of the Scanning A/D. If the test passes, "Self-test PASSED" is displayed. If the test fails, "Self-test FAILED" and a list of the error messages is displayed.

```
10!  RE-STORE "SELFTEST"
20   !
30   DIM Message$[256]
40   INTEGER Result
50   ASSIGN @Ad TO 70903                                   Assign @Ad to Scanning A/D
60   CLEAR SCREEN
70   PRINT "Allow AT LEAST 5 minutes warmup time before running self-test"
80   DISP " Press Continue to run self-test "
90   PAUSE
100  CLEAR SCREEN
110  PRINT "Performing Self-test (may take several minutes) ..."
120  OUTPUT @Ad;"*TST?"                                    Send self-test command  (may take
                                                           several minutes to complete)
130  ENTER @Ad;Result
140  CLEAR SCREEN
150  IF Result <> 0 THEN
160    PRINT "Self-test FAILED"
170    REPEAT
180      OUTPUT @Ad;"SYST:ERR?"                            Query error queue (See Error Messages
                                                           in Appendix B)
190      ENTER @Ad;Code,Message$
200      PRINT Code,Message$
210    UNTIL NOT Code
220  ELSE
230    PRINT "Self-test PASSED"
240  END IF
250  END
```

Typical Results

If the self-test passes, a typical display is:

```
Self-test PASSED
```

If the self-test fails, a typical display is as follows. If the self-test fails, you may want to run the "SERVTEST" program (see *Chapter 5 - Service*) to determine the specific test(s) and channel number(s) that failed.

```
Self-test FAILED

3052   "Self  test failed. Test info in FIFO"
0      "No error"
```

Test F-2: A/D Overrange Detection

Description

This test checks the overrange detection function of the A/D. An input of ± 17 Vdc is applied with the Scanning A/D set to the 16V range. The result should be an overrange indication (± 9.90E+37).

Equipment Setup

- Set up the equipment as shown in Figure 2-1 (Connections are shown to channel 07. You can connect inputs to any channel.)
- Be sure an SCP is installed for the channel(s) tested

WARNING

The DC Standard (Datron 4708, Option 10) can produce dangerous voltages that are present on the terminals. Do not touch the front (or rear) panel terminals unless you are sure no dangerous voltage is present.

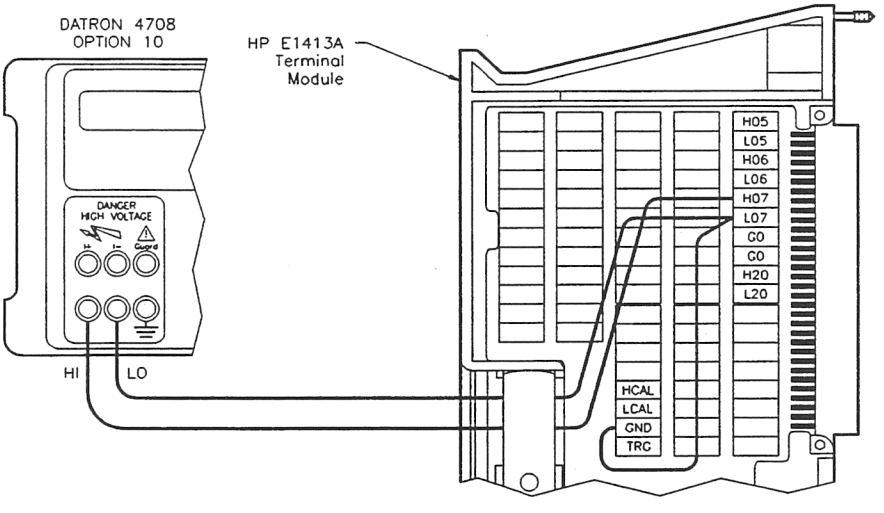

Figure 2-1. A/D Overrange Detection Connections

Test Procedure

Test with +17 Vdc applied (Input to channel 07 used)

1. Reset the Scanning A/D:

*RST;*CLS	*Reset Scanning A/D and clear status registers*

2. Set Channel 07 for DCV, 16V range:

FUNC:VOLT 16, (@107,107)	*Set Scanning A/D for voltage meas, 16 Vdc range on ch 07*

3. Initiate Measurement Cycle:

INIT	*Set Wait For Trigger state*

4. Trigger the Scanning A/D:

TRIG	*Trigger the instrument*

5. Read measurement from Current Value Table

DATA:CVT? (@107)	*Reads channel 07 voltage from CVT*
ENTER statement	*Returns reading - should be 9.90E+37*

Repeat Steps 3 through 5 for -17 Vdc input

Example Program

This program performs an overrange check for +17 Vdc and -17 Vdc input to channel 07 of the Scanning A/D. If you use a different channel, change lines 60, 130, and 250 to the channel number used.

```
10!  RE-STORE "OVERRANG"
20   !
30   ASSIGN @Ad TO 70903                                  Assign @Ad to Scanning A/D
40   OUTPUT @Addr;"*RST;*CLS"                             Reset instr and clear status registers
50    WAIT 5                                              Wait 5 sec for reset to complete
60   OUTPUT @Ad;"FUNC:VOLT 16, (@107,107)"                Set ch 07 for DCV, 16V range
70   OUTPUT @Ad;"INIT"                                    Set Wait For Trigger State
80   PRINT "Apply +17 Vdc to Scanning A/D"
90   DISP " Press Continue when ready "
100  PAUSE
110  CLEAR SCREEN
120  OUTPUT @Ad;"TRIG"                                    Trigger the instrument
130  OUTPUT @Ad;"DATA:CVT? (@107)"                        Returns ch 07 value from CV Table
140  ENTER @Ad;Result1
150  PRINT "+17 Vdc overrange indication = ";Result1
160  DISP "  Record result as desired. Then, press Continue for -17 Vdc test "
170  PAUSE
180  CLEAR SCREEN
190  OUTPUT @Ad;"INIT"                                    Set Wait For Trigger State
200  PRINT "Apply -17 Vdc to Scanning A/D"
210  DISP " Press Continue when ready "
220  PAUSE
230  CLEAR SCREEN
240  OUTPUT @Ad;"TRIG"                                    Trigger the instrument
250  OUTPUT @Ad;"DATA:CVT? (@107)"                        Returns ch 07 value from CV Table
260  ENTER @Ad;Result2
270  PRINT "-17 Vdc overrange indication = ";Result2
280  DISP " Record result as desired. Then, press Continue to end this  test. "
290  PAUSE
300  CLEAR SCREEN
310  END
```

Typical Result

A typical result when the test passes is:

+17 Vdc overrange indication = 9.90E+37
-17 Vdc overrange indication = -9.90E+37

Test F-3: Open Transducer Detection

Description

This test checks the HP E1413A "Open Transducer Detection (OTD)" capability. If a channel with OTD capability enabled has an open transducer, the channel returns an overrange indication (9.90E+37).

To do this test, an input short is applied and the channel voltage is measured. Then, the input is opened and the channel voltage is again measured. The short should return <1 Vdc and the open should return 9.90E+37 (overrange).

NOTE

Enabling any SCP channel for OTD selects all eight channels on that SCP. Thus, an open transducer on any channel to an enabled SCP results in an OTD indication for the SCP. You will need to determine which channel(s) have open transducers. See Chapter 5 - Service for guidelines.

Equipment Setup

- Set up the equipment as shown in Figure 2-2 (Connections are shown for channel 07 - modify as required)
- Be sure an SCP is installed for the channel tested

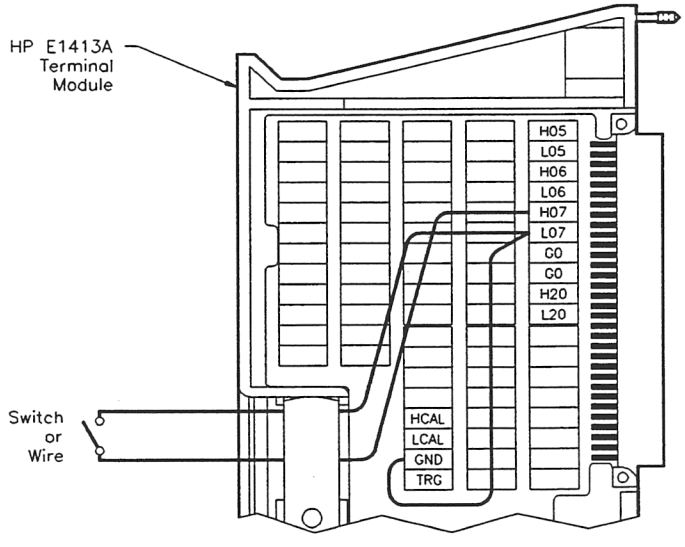

Figure 2-2. Open Transducer Detection Connections

Test Procedure

The procedure shown is for channel 07. Modify the steps as required to check the desired channel.

Test with short applied to Scanning A/D:

1. Reset the Scanning A/D:

*RST;*CLS	*Reset Scanning A/D and clear status registers*

2. Set channel 07 for DCV, 4V range:

FUNC:VOLT 4, (@107,107)	*Set for voltage meas, 4 Vdc range*

3. Enable channels 00-07 for OTD capability:

DIAG:OTD ON, (@107)	*Enable OTD capability on channels 00 - 07 (SCP 0)*

4. Initiate Measurement Cycle:

INIT	*Set Wait For Trigger state*

5. Trigger the Scanning A/D:

TRIG	*Trigger the instrument*

6. Read measurement from Current Value Table:

DATA:CVT? (@107)	*Reads channel 07 voltage from CVT*
ENTER statement	*Returns reading - should be <1 Vdc*

Repeat Steps 4 through 6 for open input.
Reading should now be 9.90E+37 (overrange)

Example Program

This program performs an open transducer check for channel 07. Modify lines 60, 70, 130, and 240 as required if you use a different channel.

```
10!  RE-STORE "OPENTRAN"
20   !
30   ASSIGN @Ad TO 70903                          Assign @Ad to Scanning A/D
40   OUTPUT @Ad;"*RST;*CLS"                       Reset A/D and clear status register
50    WAIT 5                                      Wait 5 sec for reset to complete
60   OUTPUT @Ad;"FUNC:VOLT 4, (@107,107)"         Set ch 07 for voltage meas, 4V range
70   OUTPUT @Ad;"DIAG:OTD ON, (@107)"             Enable Open Transducer Detection
                                                  capability on ch 00-07 (SCP 0)
80   DISP " Apply shorted input to Scanning A/D. Press Continue when ready.  "
90   PAUSE
100  CLEAR SCREEN
110  OUTPUT @Ad;"INIT"                            Set Wait For Trigger State
120  OUTPUT @Ad;"TRIG"                            Trigger the instrument
130  OUTPUT @Ad;"DATA:CVT? (@107)"                Returns ch 07 value from CVT
140  ENTER @Ad;Result1                            Enter result for shorted input
150  PRINT "Shorted input value = ";Result1       Display result - should be <1 Vdc
160  DISP "Record result as desired. Then, press Continue for open input test. "
170  PAUSE
180  CLEAR SCREEN
190  DISP " Apply open input to Scanning A/D. Press Continue when ready.  "
200  PAUSE
210  CLEAR SCREEN
220  OUTPUT @Ad;"INIT"                            Set Wait For Trigger State
230  OUTPUT @Ad;"TRIG"                            Trigger the instrument
240  OUTPUT @Ad;"DATA:CVT? (@107)"                Returns ch 07 value from CVT
250  ENTER @Ad;Result2                            Enter result for open transducer
260  PRINT "Open input value = ";Result2          Display result - should be 9.90E+37
270  DISP " Record result as desired. Then, press Continue to end this test. "
280  PAUSE
290  CLEAR SCREEN
300  END
```

Typical Result

A typical result for this test is:

Shorted input value = -.002929688
Open input value = 9.90E+37

Operation Verification

For the HP E1413A Scanning A/D, operation verification tests are the same as the performance verification tests.

Performance Verification

The procedures in this section are used to test the Scanning A/D's DC voltage accuracy using the 1-year specifications in the *HP E1413A User's Manual* as the performance standards. The results of each performance verification test can be recorded on the *HP E1413A Performance Test Record* (Table 2-1 at the end of this chapter).

NOTE

If the Scanning A/D fails a performance verification test, adjust the instrument using the procedures in Chapter 3 - Adjustments and then rerun the test. If the test fails again, replace the instrument.

Verification Tests

This table summarizes Scanning A/D performance verification tests.

Test	*filename*	Test Name	Checks DCV Meas Accuracy for:	Uses SCP:
2-1	PERF11	DCV Accuracy - Option 11	.0625V, .25V, 1.0V, 4.0V, 16.0V	Option 11
2-2	PERF12	DCV Accuracy - Option 12	.0625V, .25V, 1.0V, 4.0V, 16.0V	Option 12
2-3	PERF131	DCV Accuracy - Option 13 (Gain X1)	.0625V, .25V, 1.0V, 4.0V, and 16.0V ranges using gain X1 and 2 Hz, 10 Hz, 100 Hz filter or filter OFF	Option 13
	PERF138	DCV Accuracy - Option 13 (Gain X8)	.0625V, .25V, 1.0V, 4.0V, and 16.0V ranges using gain X8 and 2 Hz, 10 Hz, 100 Hz filter or filter OFF	Option 13
	PERF1364	DCV Accuracy - Option 13 (Gain X64)	.25V, 1.0V, 4.0V, and 16.0V ranges using gain X64 and 2 Hz, 10 Hz, 100 Hz filter or filter OFF	Option 13

Verification Test Conditions

The assumed conditions for the HP E1413A performance verification tests are based on the following specifications/conditions.

- *Minimum* 1 hour warmup for the Scanning A/D and DC Standard
- Test environment temperature 23°C ± 1°C
- Linearity = ± 0.02% of reading (1-year specifications)
- *CAL? command executed before measurements
- CAL:ZERO? executed within 5 minutes after *CAL?
- [SENSe:]FILTer[:LPASs][:STATe] ON set

Test 2-1: DCV Accuracy - Option 11

Description

This test checks if the HP E1413A Scanning A/D meets its specifications for DC Voltage Measurement Accuracy when an Option 11 Straight-Through SCP is used.

Equipment Setup

- For channel tare/calibration connections, see Figure 2-3.
- For connections to the DC Standard (Datron 4708), see Figure 2-4.

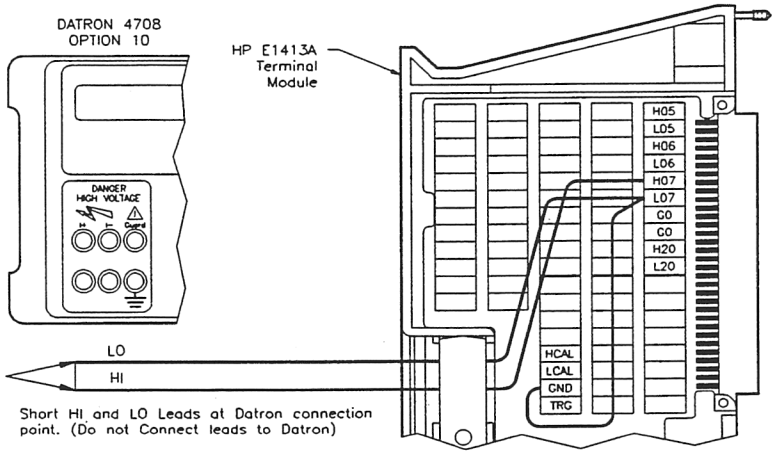

Figure 2-3. Channel Tare/Calibration Connections

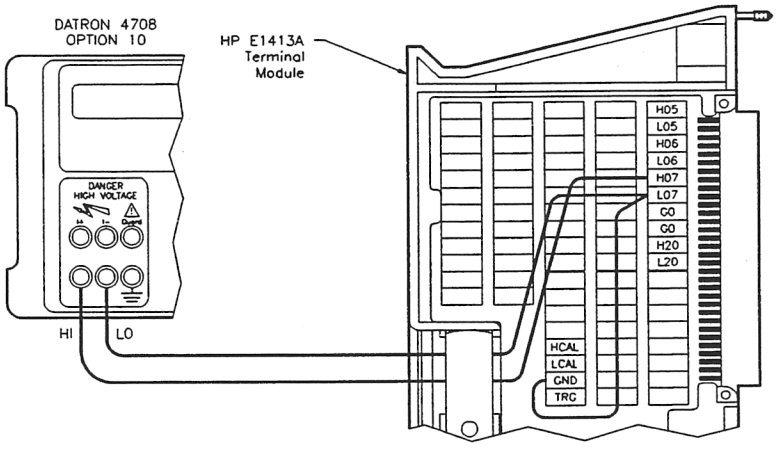

Figure 2-4. DC Standard Connections

Test Procedure

The procedure shown uses channel 07. Substitute the appropriate channel number if you use another channel.

1 Make Channel Tare/Calibration Connections

[a] Connect wiring to terminal module (see Figure 2-2)
[b] Connect terminal module to installed Scanning A/D

2 Check SCP 0 type (must be Option 11)

SYST:CTYP? (@107)	*Check SCP 0 type*
ENTER statement	*Should return "HEWLETT-PACKARD, E1413 Opt 11 8-Channel Straight-Through SCP,0,0"*

3 Perform Channel Calibrations

CAL:TARE (@107)	*Perform channel tare for wiring (*CAL? also performed)*
CAL:ZERO?	*Perform A/D Zero*

4 Make Connections to DC Standard

WARNING

The DC Standard (Datron 4708, Option 10) can produce dangerous voltages that are present on the terminals. Do not touch the front (or rear) panel terminals unless you are sure no dangerous voltage is present.

---

[a] Connect HI and LO leads to DC Standard (see Figure 2-4)
[b] Set DC Standard OUTPUT to -50 mV

5 Make DCV Measurements

*RST;*CLS	*Reset Scanning A/D, clear status reg*
WAIT 5	*Wait 5 seconds for reset to complete*
FUNC:VOLT .0625, (@107,107)	*Set DCV meas, .0625V range on ch 07*
ROUT:SEQ:DEF LIST1, (@107,107)	*Defines ch 07 as scan list for LIST1*
ROUT:SCAN LIST1	*Sets LIST1 as Scan List*
TRIG:SOUR IMM	*Sets continuous triggering*
SAMP:TIM LIST1, 1E-3	*Pace measurements at 1 msec intervals*
SENS:FILT ON	*Enables A/D filter*
INIT:CONT ON	*Sets continuous Wait for Trigger state*
DATA:FIFO:PART? 100	*Returns 100 readings from FIFO buffer*

ENTER Statement	*Enters 100 readings*
INIT:CONT OFF	*Finish scan, return to Trigger Idle state*
Average = SUM(Result)/100.0	*Result is average of 100 readings*

6 Repeat Measurements for each Input and Range

[a] Set DC Standard OUTPUT to -37 mV and repeat Step 5
[b] Repeat [a] for the inputs and ranges in the following table

Range	.0625 V	.25 V	1.0 V	4.0 V	16.0 V
Input (Vdc)		-0.20	-0.80	-3.2	-12.8
		-0.15	-0.60	-2.4	- 9.6
	-0.025	-0.10	-0.40	-1.6	- 6.4
	-0.012	-0.05	-0.20	-0.8	- 3.2
	0.000	0.00	0.00	0.0	0.0
	0.012	0.05	0.20	0.8	3.2
	0.025	0.10	0.40	1.6	6.4
	0.037	0.15	0.60	2.4	9.6
	0.050	0.20	0.80	3.2	12.8

Example Program

An example program (TEST11) follows to show the measurement procedure. A more complete program for *Test 2-1: DCV Accuracy - Option 11* is in file "PERF11" on the *HP E1413A Service Programs* disk. To run the "PERF11" program, load the disk, type LOAD "PERF11", and then press RUN.

The "PERF11" program allows the user to make nine DCV measurements on each of the five ranges (45 measurements) when an Option 11 Straight-Through SCP is used. In addition, the "PERF11" program allows you to select the channel to be used, checks the SCP for this channel, and provides error-checking and test failure routines.

```
10!  RE-STORE "TEST11"
20   !
30   ASSIGN @Ad TO 70903
40   !
50   DIM Input(1:45),Limit(1:45),Rng(1:5),Fifo(1:100)
60   DIM Avg(1:45),Offset(1:5),Range$(1:5)[7]
70   !
80   !——— Perform Channel Tare/Calibration ————
90   !
100  PRINT "Make Channel Tare/Calibration Connections"
110  PRINT
120  PRINT "  1. Connect HI lead to H07 on terminal block"
```

(continued on next page)

```
130 PRINT "  2. Connect LO lead to L07 on terminal block"
140 PRINT "  3. Connect lead between L07 and GND on terminal block"
150 PRINT "  4. Short HI and LO leads at DC Standard Conn Point"
160 PRINT "     (Do NOT connect leads to DC Standard)"
170 DISP " Press Continue when ready to run channel calibration "
180 PAUSE
190 CLEAR SCREEN
200 PRINT "Performing Channel Tare, Channel Calibration, and A/D Zero"
210 PRINT "(These calibrations require about 1 - 2 minutes)"
220 OUTPUT @Ad;"CAL:TARE (@107)"
230 OUTPUT @Ad;"CAL:TARE?"
240 ENTER @Ad;Tare_res
250 OUTPUT @Ad;"CAL:ZERO?"
260 ENTER @Ad;Zero_res
270 DISP " Channel Calibrations Complete. Press Continue to make measurements "
280 PAUSE
290 CLEAR SCREEN
300 !
310 !——— Make DC Voltage Measurements ————
320 !
330 PRINT "Make Connections to DC Standard"
340 PRINT
350 PRINT "  1. Set DC Std to 0V OUTPUT and OUTPUT switch OFF"
360 PRINT "  2. Remove short between HI and LO leads at DC Std conn point"
370 PRINT "  3. Connect HI and LO leads to DC Std Hi and Lo connectors"
380 DISP " Press Continue when connections are complete "
390 PAUSE
400 CLEAR SCREEN
410 !
420 DATA -.05,-.037,-.025,-.012,0.0,.012,.025,.037,.05    !.0625 V range
430 DATA -.2,-.15,-.1,-.05,0.0,.05,.1,.15,.2              !.25 V range
440 DATA -.8,-.6,-.4,-.2,0.0,.2,.4,.6,.8                  !1.0 V range
450 DATA -3.2,-2.4,-1.6,-.8,0.0,.8,1.6,2.4,3.2            !4.0 V range
460 DATA -12.8,-9.6,-6.4,-3.2,0.0,3.2,6.4,9.6,12.8        !16.0 V range
470 READ Input(*)
480 DATA .0625,.25,1.0,4.0,16.0
490 READ Rng(*)
500 DATA 1.33E-5,34.3E-5,1.21E-4,4.88E-4,1.988E-3
510 READ Offset(*)
520 DATA .0625 V,.25 V,1.0 V,4.0 V,16.0 V
530 READ Range$(*)
540 OUTPUT @Ad;"*RST;*CLS"
550 PRINT "Resetting Scanning A/D"
```

(continued on next page)

```
560  WAIT 5
570  CLEAR SCREEN
580  FOR J=1 TO 5                    !5 ranges
590    FOR I=1+9*(J-1) TO 9*J        !9 meas on each range
600 Retry:  !
610      PRINT "DC Volts Measurement Accuracy Test"
620      PRINT "Option 11 Straight-Through Filter SCP"
630      PRINT
640      PRINT "Scanning A/D Range:";Rng(J);"V"
650      PRINT "Input Voltage:     ";Input(I);"V"
660      PRINT TABXY(1,12),"1. Set DC Standard OUTPUT to ";Input(I);"V"
670      PRINT TABXY(1,13),"2. Set DC Standard OUTPUT switch to ON"
680      IF I=37 OR I=45 THEN
690        BEEP
700        PRINT TABXY(1,9),"To avoid inputting an overvoltage to the Scanning A/D:"
710        PRINT TABXY(1,11),"1. Set DC Standard OUTPUT switch OFF"
720        PRINT TABXY(1,12),"2. Select the 100 V RANGE                    "
730        PRINT TABXY(1,13),"3. Set DC Standard OUTPUT to ";Input(I);"V     "
740        PRINT TABXY(1,14),"4. Set DC Standard OUTPUT switch to ON"
750      END IF
760      DISP " Press Continue when ready "
770      PAUSE
780      CLEAR SCREEN
790      OUTPUT @Ad;"FUNC:VOLT "&VAL$(Rng(J))&", (@107,107)"
800      OUTPUT @Ad;"ROUT:SEQ:DEF LIST1, (@107,107)"
810      OUTPUT @Ad;"ROUT:SCAN LIST1"
820      OUTPUT @Ad;"TRIG:SOUR IMM"
830      OUTPUT @Ad;"SAMP:TIM LIST1, 1E-3"
840      OUTPUT @Ad;"SENS:FILT ON"
850      OUTPUT @Ad;"INIT:CONT ON"
860      OUTPUT @Ad;"DATA:FIFO:PART? 100"
870      ENTER @Ad;Fifo(*)
880      OUTPUT @Ad;"INIT:CONT OFF"
890      Avg(I)=SUM(Fifo)/100.0
900      Limit(I)=Offset(J)+.0002*ABS(Input(I))
910    NEXT I
920  NEXT J
930  DISP " This completes the DCV Measurements Tests. Press Continue for results. "
940  PAUSE
950  CLEAR SCREEN
960  !
970  !————————— Display Results —————————
980  !
```

(continued on next page)

```
990  PRINT "                    HP E1413A Scanning A/D"
1000 PRINT "                    DC Voltage Accuracy Test"
1010 PRINT "                  Option 11 Straight-Through SCP"
1020 PRINT
1030 PRINT "Date: ";DATE$(TIMEDATE)
1040 PRINT "Time: ";TIME$(TIMEDATE)
1050 PRINT
1060 PRINT "Range      Input      Minimum      Reading      Maximum"
1070 PRINT
1080 FOR J=1 TO 5
1090   FOR I=1+9*(J-1) TO 9*J
1100     IF ABS(Avg(I))>1.E+37 THEN Avg(I)=0
1110     IF J=1 OR J=2 THEN
1120       Input(I)=Input(I)*1.E+3
1130       Limit(I)=Limit(I)*1.E+3
1140       Avg(I)=Avg(I)*1.E+3
1150       Inp$="mV"
1160     END IF
1170     IF J>2 THEN Inp$="V"
1180 Fmt: IMAGE (7A,2X,S3D.4D,X,2A,2X,S3D.4D,X,2A,3X,S3D.4D,X,2A,3X,S3D.4D,X,2A)
1190     PRINT USING Fmt;Range$(J),Input(I),Inp$,Input(I)-Limit(I),Inp$,Avg(I),Inp$,Input(I)+Limit(I),Inp$
1200   NEXT I
1210 NEXT J
1220 END
```

Typical Result

A typical result after running "TEST11" follows.

```
                    HP E1413A Scanning A/D
                    DC Voltage Accuracy Test
                  Option 11 Straight-Through SCP

Date:  23 Nov 1993
Time:  11:15:05

Range        Input        Minimum      Reading      Maximum

.0625 V      -50.0000 mV  -50.0233 mV  -50.0071 mV  -49.9767 mV
.0625 V      -37.0000 mV  -37.0207 mV  -37.0063 mV  -36.9793 mV
  .            .            .            .            .
  .            .            .            .            .
16.0 V       +12.8000 V   +12.7972 V   +12.8001 V   +12.8028 V
```

Test 2-2: DCV Accuracy - Option 12

Description

This test checks if the HP E1413A Scanning A/D meets its specifications for DC Voltage Measurement Accuracy when an Option 12 Fixed Filter SCP is used.

Equipment Setup

- For channel tare/calibration connections, see Figure 2-5
- For connections to DC Standard (Datron 4708), see Figure 2-6

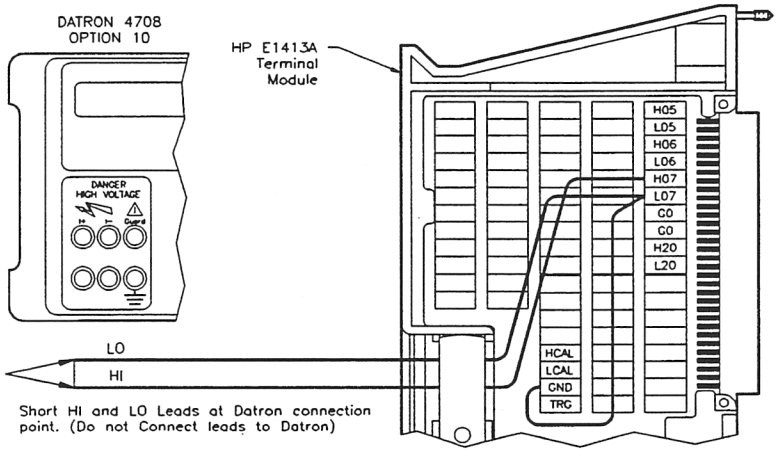

Figure 2-5. Channel Tare/Calibration Connections

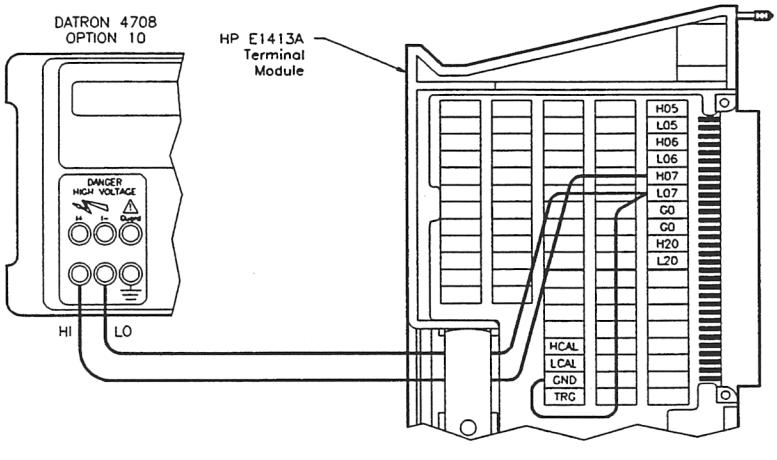

Figure 2-6. DC Standard Connections

Test Procedure

The procedure shown uses channel 07. Substitute the appropriate channel number if you use another channel.

1 Make Channel Tare/Calibration Connections

[a] Connect wiring to terminal module (see Figure 2-5)
[b] Connect terminal module to installed Scanning A/D

2 Check SCP 0 type (must be Option 12)

SYST:CTYP? (@107)	*Check SCP 0 type*
ENTER statement	*Should return "HEWLETT-PACKARD,E1413 Opt 12 8-Channel Fixed Filter SCP,0,0"*

3 Perform Channel Calibrations

CAL:TARE (@107)	*Perform channel tare for wiring (*CAL? also performed)*
CAL:ZERO?	*Perform A/D Zero*

4 Make Connections to DC Standard

WARNING

The DC Standard (Datron 4708, Option 10) can produce dangerous voltages that are present on the terminals. Do not touch the front (or rear) panel terminals unless you are sure no dangerous voltage is present.

---

[a] Connect HI and LO leads to DC Standard (see Figure 2-6)
[b] Set DC Standard OUTPUT to -50 mV

5 Make DCV Measurements

*RST;*CLS	*Reset Scanning A/D,clear status reg*
WAIT 5	*Wait 5 seconds for reset to complete*
FUNC:VOLT .0625, (@107,107)	*Set DCV meas, .0625V range on ch 07*
ROUT:SEQ:DEF LIST1, (@107,107)	*Defines ch 07 as scan list for LIST1*
ROUT:SCAN LIST1	*Sets LIST1 as Scan List*
TRIG:SOUR IMM	*Sets continuous triggering*
SAMP:TIM LIST1, 1E-3	*Pace measurements at 1 msec intervals*
SENS:FILT ON	*Enables A/D filter*
INIT:CONT ON	*Sets continuous Wait for Trigger state*
DATA:FIFO:PART? 100	*Returns 100 readings from FIFO buffer*

ENTER Statement	*Enters 100 readings*
INIT:CONT OFF	*Finish scan,return to Trigger Idle state*
Average = SUM(Result)/100.0	*Result is average of 100 readings*

6 Repeat Measurements for each Input and Range

[a] Set DC Standard OUTPUT to -37 mV and repeat Step 5
[b] Repeat [a] for the inputs and ranges in the following table

Range	.0625 V	.25 V	1.0 V	4.0 V	16.0 V
Input (Vdc)		-0.20	-0.80	-3.2	-12.8
		-0.15	-0.60	-2.4	- 9.6
	-0.025	-0.10	-0.40	-1.6	- 6.4
	-0.012	-0.05	-0.20	-0.8	- 3.2
	0.000	0.00	0.00	0.0	0.0
	0.012	0.05	0.20	0.8	3.2
	0.025	0.10	0.40	1.6	6.4
	0.037	0.15	0.60	2.4	9.6
	0.050	0.20	0.80	3.2	12.8

Example Program

An example program ("TEST11") is listed in *Test 2-1: DCV Accuracy - Option 11*. You can use this program for Test 2-2 by changing the "TEST11" program lines as follows:

```
500  DATA 2.22E-5,40.2E-5,1.25E-4,4.88E-4,1.988E-3
620  PRINT "Option 12 Fixed Filter SCP"
1010 PRINT "Option 12 Fixed Filter SCP"
```

You can also use the "PERF12" program in file "PERF12" on the *HP E1413A Service Programs* disk. To run the "PERF12" program, load the disk, type LOAD "PERF12", and then press RUN.

The "PERF12" program allows the user to make nine DCV measurements on each of the five ranges (45 measurements) when an Option 12 Fixed Filter SCP is used. In addition, the "PERF12" program allows you to select the channel to be used, checks the SCP for this channel, and provides error-checking and test failure routines.

Typical Result

A typical result after running "TEST11" with modifications to lines 500, 620, and 1010 follows.

HP E1413A Scanning A/D
DC Voltage Accuracy Test
Option 12 Fixed Filter SCP

Date: 23 Nov 1993
Time: 11:15:05

Range	Input	Minimum	Reading	Maximum
.0625 V	-50.0000 mV	-50.0322 mV	-50.0071 mV	-49.9678 mV
.0625 V	-37.0000 mV	-37.0296 mV	-37.0063 mV	-36.9704 mV
.	.	.	.	.
.	.	.	.	.
16.0 V	+12.8000 V	+12.7955 V	+12.8001 V	+12.8045 V

Test 2-3: DCV Accuracy - Option 13

Description

This test checks if the HP E1413A Scanning A/D meets its specifications for DC Voltage Measurement Accuracy when an Option 13 Amplifier+ Filter SCP is used.

Equipment Setup

- For channel tare/calibration connections, see Figure 2-7
- For connections to DC Standard (Datron 4708), see Figure 2-8

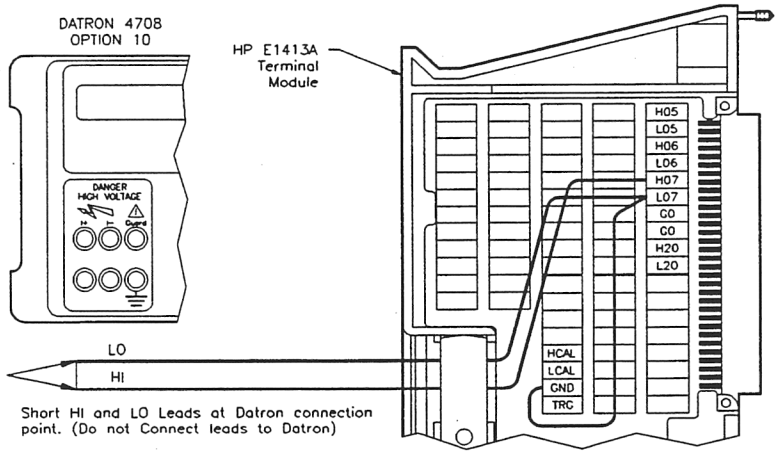

Figure 2-7. Channel Tare/Calibration Connections

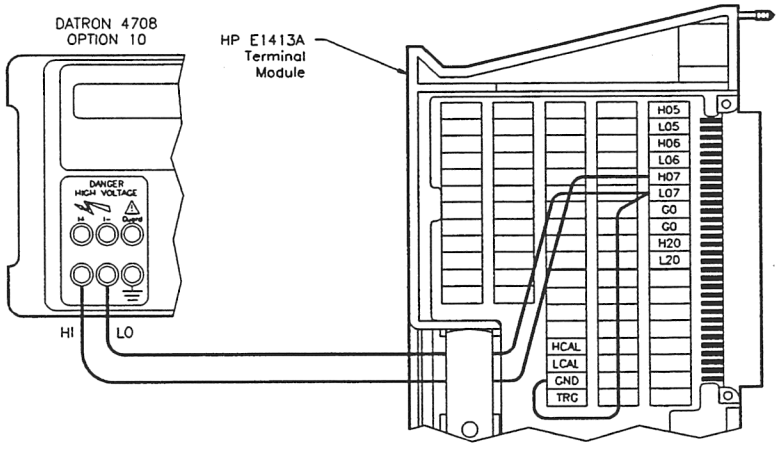

Figure 2-8. DC Standard Connections

Test Procedure

The procedure shown uses channel 07, gain X1, and 100 Hz filter cutoff frequency. Substitute the appropriate channel number, gain, and filter cutoff frequency as required for your application.

1 Make Channel Tare/Calibration Connections

[a] Connect wiring to terminal module (see Figure 2-7)
[b] Connect terminal module to installed Scanning A/D

2 Check SCP 0 type (must be Option 13)

SYST:CTYP? (@107)	*Check SCP 0 type*
ENTER statement	*Should return "HEWLETT-PACKARD, E1413 Opt 13 8-Channel Amp+Filter SCP,0,0"*

3 Perform Channel Calibrations

CAL:TARE (@107)	*Perform channel tare for wiring (*CAL? also performed)*
CAL:ZERO?	*Perform A/D Zero*

4 Make Connections to DC Standard

WARNING

The DC Standard (Datron 4708, Option 10) can produce dangerous voltages that are present on the terminals. Do not touch the front (or rear) panel terminals unless you are sure no dangerous voltage is present.

---

[a] Connect HI and LO leads to DC Standard (see Figure 2-8)
[b] Set DC Standard OUTPUT to -50 mV

5 Make DCV Measurements

*RST;*CLS	*Reset Scanning A/D,clear status reg*
WAIT 5	*Wait 5 seconds for reset to complete*
INP:GAIN 1, (@107)	*Set SCP gain X1*
INP:FILT:FREQ 100, (@107)	*Set 100 Hz as filter cutoff freq*
FUNC:VOLT .0625, (@107,107)	*Set DCV meas, .0625V range on ch 07*
ROUT:SEQ:DEF LIST1, (@107,107)	*Defines ch 07 as scan list for LIST1*
ROUT:SCAN LIST1	*Sets LIST1 as Scan List*
TRIG:SOUR IMM	*Sets continuous triggering*
SAMP:TIM LIST1, 1E-3	*Pace measurements at 1 msec intervals*
SENS:FILT ON	*Enables A/D filter*

INIT:CONT ON	*Sets continuous Wait for Trigger state*
DATA:FIFO:PART? 400	*Returns 400 readings from FIFO buffer*
ENTER Statement	*Enters 400 readings*
INIT:CONT OFF	*Finish scan, return to Trigger Idle state*
Average = SUM(Result)/400.0	*Result is average of 400 readings*

6 Repeat Measurements for each Input and Range

[a] Set DC Standard OUTPUT to -37 mV and repeat Step 5
[b] Repeat [a] for the inputs and ranges in the following table

Range	.0625V	.25V	1.0 V	4.0 V	16.0 V
Gain X1	-50 mV -37 mV -25 mV -12 mV 0 mV 12 mV 25 mV 37 mV 50 mv	-0.20 V -0.15 V -0.10 V -0.05 V 0.00 V 0.05 V 0.10 V 0.15 V 0.20 V	-0.80 V -0.60 V -0.40 V -0.20 V 0.00 V 0.20 V 0.40 V 0.60 V 0.80 V	-3.2 V -2.4 V -1.6 V -0.8 V 0.0 V 0.8 V 1.6 V 2.4 V 3.2 V	-12.8 V - 9.6 V - 6.4 V - 3.2 V 0.0 V 3.2 V 6.4 V 9.6 V 12.8 V
Gain X8	-6.0 mV -4.5 mV -3.0 mV -1.5 mV 0.0 mV 1.5 mV 3.0 mV 4.5 mV 6.0 mV	-25 mV -18 mV -12 mV - 6 mV 0 mV 6 mV 12 mV 18 mV 25 mV	-100 mV - 75 mV - 50 mV - 25 mV 0 mV 25 mV 50 mV 75 mV 100 mV	-0.4 V -0.3 V -0.2 V -0.1 V 0.0 V 0.1 V 0.2 V 0.3 V 0.4 V	-1.6 V -1.2 V -0.8 V -0.4 V 0.0 V 0.4 V 0.8 V 1.2 V 1.6 V
Gain X64	N/A	-3.0 mV -2.5 mV -1.5 mV -0.8 mV 0.0 mV 0.8 mV 1.5 mV 2.5 mV 3.0 mV	-12.8 mV - 9.6 mV - 6.4 mV - 3.2 mV 0.0 mV 3.2 mV 6.4 mV 9.6 mV 12.8 mV	-50.0 mV -37.5 mV -25.0 mV -12.5 mV 0.0 mV 12.5 mV 25.0 mV 37.5 mV 50.0 mV	-200 V -150 V -100 V - 50 V 0 V 50 V 100 V 150 V 200 V

Example Program

An example program ("TEST131") follows to show the measurement procedure. More complete programs for *Test 2-3: DCV Accuracy - Option 13* are in files "PERF131" (for gain X1), "PERF138" (for gain X8), and "PERF1364" (for gain X64) on the *HP E1413A Service Programs* disk. To run the "PERF13X" programs, load the disk, type LOAD "PERF131", "PERF138", or "PERF1364" and then press RUN.

The "PERF131" and "PERF138" programs allow the user to make nine DCV measurements on each of the five ranges (45 measurements) when an Option 13 Amplifier+Filter SCP is used. The "PERF1364" program allows the user to make nine DCV measurements on each of four ranges (36 measurements), since the .0625V range is not allowed for gain X64 measurements.

In addition, the "PERF13X" programs allow you to select the channel to be used and the filter cutoff frequency (2 Hz, 10 Hz, 100 Hz or filter OFF), checks the SCP for the channel selected, and provides error-checking and test failure routines.

NOTE

Use the "PERF138" program for SCP gain X8 or use the "PERF1364" program for SCP gain X64. For gain X64, note that only four ranges are measured, as the .0625V range is not allowed for gain X64 measurements.

There are 12 performance verification tests available for the Option 13 SCP. You may do any or all tests, depending on your specific application requirements. The Option 13 SCP was factory-tested at 2 Hz, 10 Hz, 100 Hz and filter OFF for gain X1; at 100 Hz for gain X8; and at 100 Hz for gain X64.

```
10!  RE-STORE "TEST131"
20   !
30   ASSIGN @Ad TO 70903
40   !
50   DIM Input(1:45),Limit(1:45),Rng(1:5),Fifo(1:400)
60   DIM Avg(1:45),Offset(1:5),Range$(1:5)[7]
70   !
80   !——— Perform Channel Tare/Calibration ————
90   !
100  PRINT "Make Channel Tare/Calibration Connections"
110  PRINT
```

(continued on next page)

```
120  PRINT "  1. Connect HI lead to H07 on terminal block"
130  PRINT "  2. Connect LO lead to L07 on terminal block"
140  PRINT "  3. Connect lead between L07 and GND on terminal block"
150  PRINT "  4. Short HI and LO leads at DC Standard Conn Point"
160  PRINT "     (Do NOT connect leads to DC Standard)"
170  DISP " Press Continue when ready to run channel calibration "
180  PAUSE
190  CLEAR SCREEN
200  PRINT "Performing Channel Tare, Channel Calibration, and A/D Zero"
210  PRINT "(These calibrations require about 1 - 2 minutes)"
220  OUTPUT @Ad;"CAL:TARE (@107)"
230  OUTPUT @Ad;"CAL:TARE?"
240  ENTER @Ad;Tare_res
250  OUTPUT @Ad;"CAL:ZERO?"
260  ENTER @Ad;Zero_res
270  DISP " Channel Calibrations Complete. Press Continue to make measurements "
280  PAUSE
290  CLEAR SCREEN
300  !
310  !——— Make DC Voltage Measurements ————
320  !
330  PRINT "Make Connections to DC Standard"
340  PRINT
350  PRINT "  1. Set DC Std to 0V OUTPUT and OUTPUT switch OFF"
360  PRINT "  2. Remove short between HI and LO leads at DC Std conn point"
370  PRINT "  3. Connect HI and LO leads to DC Std Hi and Lo connectors"
380  DISP " Press Continue when connections are complete "
390  PAUSE
400  CLEAR SCREEN
410  !
420  DATA -.05,-.037,-.025,-.012,0.0,.012,.025,.037,.05   !.0625 V range
430  DATA -.2,-.15,-.1,-.05,0.0,.05,.1,.15,.2             !.25 V range
440  DATA -.8,-.6,-.4,-.2,0.0,.2,.4,.6,.8                 !1.0 V range
450  DATA -3.2,-2.4,-1.6,-.8,0.0,.8,1.6,2.4,3.2           !4.0 V range
460  DATA -12.8,-9.6,-6.4,-3.2,0.0,3.2,6.4,9.6,12.8       !16.0 V range
470  READ Input(*)
480  DATA .0625,.25,1.0,4.0,16.0
490  READ Rng(*)
500  DATA 3.28E-5,4.28E-5,1.243E-4,4.88E-4,1.988E-3
510  READ Offset(*)
520  DATA .0625 V,.25 V,1.0 V,4.0 V,16.0 V
530  READ Range$(*)
540  OUTPUT @Ad;"*RST;*CLS"
```

(continued on next page)

```
550  PRINT "Resetting Scanning A/D"
560  WAIT 5
570  CLEAR SCREEN
580  OUTPUT @Ad;"INP:GAIN 1, (@107)"
590  OUTPUT @Ad;"INP:FILT:FREQ 100, (@107)"
600  FOR J=1 TO 5                  !5 ranges
610    FOR I=1+9*(J-1) TO 9*J      !9 meas on each range
620 Retry:  !
630      PRINT "DC Volts Measurement Accuracy Test"
640      PRINT "Option 13 Amplifier+Filter SCP"
650      PRINT "Gain X1 and 100 Hz Filter"
660      PRINT
670      PRINT "Scanning A/D Range:";Rng(J);"V"
680      PRINT "Input Voltage:    ";Input(I);"V"
690      PRINT TABXY(1,12),"1. Set DC Standard OUTPUT to ";Input(I);"V"
700      PRINT TABXY(1,13),"2. Set DC Standard OUTPUT switch to ON"
710      IF I=37 OR I=45 THEN
720        BEEP
730        PRINT TABXY(1,9),"To avoid inputting an overvoltage to the Scanning A/D:"
740        PRINT TABXY(1,11),"1. Set DC Standard OUTPUT switch OFF"
750        PRINT TABXY(1,12),"2. Select the 100 V RANGE                "
760        PRINT TABXY(1,13),"3. Set DC Standard OUTPUT to ";Input(I);"V    "
770        PRINT TABXY(1,14),"4. Set DC Standard OUTPUT switch to ON"
780      END IF
790      DISP " Press Continue when ready "
800      PAUSE
810      CLEAR SCREEN
820      OUTPUT @Ad;"FUNC:VOLT "&VAL$(Rng(J))&", (@107,107)"
830      OUTPUT @Ad;"ROUT:SEQ:DEF LIST1, (@107,107)"
840      OUTPUT @Ad;"ROUT:SCAN LIST1"
850      OUTPUT @Ad;"TRIG:SOUR IMM"
860      OUTPUT @Ad;"SAMP:TIM LIST1, 1E-3"
870      OUTPUT @Ad;"SENS:FILT ON"
880      OUTPUT @Ad;"INIT:CONT ON"
890      OUTPUT @Ad;"DATA:FIFO:PART? 400"
900      ENTER @Ad;Fifo(*)
910      OUTPUT @Ad;"INIT:CONT OFF"
920      Avg(I)=SUM(Fifo)/400.0
930      Limit(I)=Offset(J)+.0002*ABS(Input(I))
940    NEXT I
950  NEXT J
960  DISP " This completes the DCV Measurements Tests. Press Continue for results. "
970  PAUSE
```

(continued on next page)

```
980  CLEAR SCREEN
990  !
1000 !————————— Display Results —————————
1010 !
1020 PRINT "                    HP E1413A Scanning A/D"
1030 PRINT "                  DC Voltage Accuracy Test"
1040 PRINT "                Option 13 Amplifier+Filter SCP"
1050 PRINT "          Gain X1 and 100 Hz Filter"
1060 PRINT
1070 PRINT "Date: ";DATE$(TIMEDATE)
1080 PRINT "Time: ";TIME$(TIMEDATE)
1090 PRINT
1100 PRINT "Range      Input      Minimum      Reading      Maximum"
1110 PRINT
1120 FOR J=1 TO 5
1130   FOR I=1+9*(J-1) TO 9*J
1140     IF ABS(Avg(I))>1.E+37 THEN Avg(I)=0
1150     IF J=1 OR J=2 THEN
1160       Input(I)=Input(I)*1.E+3
1170       Limit(I)=Limit(I)*1.E+3
1180       Avg(I)=Avg(I)*1.E+3
1190       Inp$="mV"
1200     END IF
1210     IF J>2 THEN Inp$="V"
1220 Fmt: IMAGE (7A,2X,S3D.4D,X,2A,2X,S3D.4D,X,2A,3X,S3D.4D,X,2A,3X,S3D.4D,X,2A)
1230     PRINT USING Fmt;Range$(J),Input(I),Inp$,Input(I)-Limit(I),Inp$,Avg(I),Inp$,Input(I)+Limit(I),Inp$
1240   NEXT I
1250 NEXT J
1260 END
```

Typical Result

A typical result after running "TEST131" follows.

```
                    HP E1413A Scanning A/D
                  DC Voltage Accuracy Test
               Option 13 Amplifier+Filter SCP
                 Gain X1 and 100 Hz Filter

Date:  23 Nov 1993
Time:  11:15:05

Range        Input        Minimum      Reading      Maximum

.0625 V      -50.0000 mV  -50.0428 mV  -50.0071 mV  -49.9572 mV
.0625 V      -37.0000 mV  -37.0402 mV  -37.0063 mV  -36.9598 mV
  .            .            .            .            .
  .            .            .            .            .
16.0 V       +12.8000 V   +12.7955 V   +12.8001 V   +12.8045 V
```

Performance Test Record

Table 2-1, *HP E1413A Performance Test Record*, is a form you can copy and use to record performance verification test results for the HP E1413A Scanning A/D. This table shows HP E1413A Scanning A/D instrument accuracy, Datron 4708 Option 10 measurement uncertainty, and test accuracy ratio (TAR) values. See *Appendix A - Calculating Scanning A/D Accuracy* for information on accuracy, measurement uncertainty, and TAR calculations.

Scanning A/D Test Limits

Test limits are defined using the 1-year specifications in *Appendix A - Specifications* of the *HP E1413A User's Manual*. See *Appendix A - Calculating Scanning A/D Accuracy* in this manual for sample calculations of Scanning A/D test limits.

Measurement Uncertainty

For the performance verification tests in this manual, the measurement uncertainties are based on the 90-day accuracy specifications for the Datron 4708 Source. See *Appendix A - Calculating Scanning A/D Accuracy* in this manual for sample calculations of measurement uncertainty.

Test Accuracy Ratio (TAR)

Test Accuracy Ratio (TAR) for the HP E1413A is defined as Scanning A/D Accuracy divided by Measurement Uncertainty, where accuracy = maximum allowable value - expected reading. That is:

$$\text{TAR} = \frac{\text{Maximum Value} - \text{Expected Reading}}{\text{Measurement Uncertainty}}$$

For TARs that exceed 10:1, the entry is ">10:1".

Table 2-1. Performance Test Record for the HP E1413A Scanning A/D (Page 1 of 16)

Test Facility:

Name _____ Report No. _____

Address _____ Date _____

City/State _____ Customer _____

Phone _____ Tested by _____

Model _____ Ambient temperature _____ °C

Serial No. _____ Relative humidity _____ %

Options _____ Line frequency _____ Hz (nominal)

Firmware Rev. _____

Special Notes:

_____

_____

_____

_____

_____

_____

_____

_____

_____

_____

_____

_____

_____

_____

Table 2-1. Performance Test Record for the HP E1413A Scanning A/D (Page 2 of 16)

Test Equipment Used: Description	Model No.	Trace No.	Cal Due Date
1. _____	_____	_____	_____
2. _____	_____	_____	_____
3. _____	_____	_____	_____
4. _____	_____	_____	_____
5. _____	_____	_____	_____
6. _____	_____	_____	_____
7. _____	_____	_____	_____
8. _____	_____	_____	_____
9. _____	_____	_____	_____
10. _____	_____	_____	_____
11. _____	_____	_____	_____
12. _____	_____	_____	_____
13. _____	_____	_____	_____
14. _____	_____	_____	_____
15. _____	_____	_____	_____
16. _____	_____	_____	_____
17. _____	_____	_____	_____
18. _____	_____	_____	_____
19. _____	_____	_____	_____
20. _____	_____	_____	_____

Table 2-1. Performance Test Record for the HP E1413A Scanning A/D (Page 3 of 16)

Test 2-1: DCV Measurement Accuracy - Option 11 Straight-Through SCP

Range	Input	Minimum	Measured	Maximum	M.U.*	TAR**
.0625 V	- 50.0000 mV	- 50.0233 mV	_____	- 49.9767 mV	7.5E-7 V	>10:1
	- 37.0000 mV	- 37.0207 mV	_____	- 36.9793 mV	6.6E-7 V	>10:1
	- 25.0000 mV	- 25.0183 mV	_____	- 24.9817 mV	5.8E-7 V	>10:1
	- 12.0000 mV	- 12.0157 mV	_____	- 11.9843 mV	4.8E-7 V	>10:1
	0.0000 mV	- 0.0133 mV	_____	+ 0.0133 mV	4.0E-7 V	>10:1
	+ 12.0000 mV	+ 11.9843 mV	_____	+ 12.0157 mV	4.8E-7 V	>10:1
	+ 25.0000 mV	+ 24.9817 mV	_____	+ 25.0183 mV	5.8E-7 V	>10:1
	+ 37.0000 mV	+ 36.9793 mV	_____	+ 37.0207 mV	6.6E-7 V	>10:1
	+ 50.0000 mV	+ 49.9796 mV	_____	+ 50.0233 mV	7.5E-7 V	>10:1
.25 V	- 200.0000 mV	- 200.0743 mV	_____	- 199.9257 mV	1.6E-6 V	>10:1
	- 150.0000 mV	- 150.0643 mV	_____	- 149.9357 mV	1.4E-6 V	>10:1
	- 100.0000 mV	- 100.0543 mV	_____	- 99.9457 mV	1.2E-6 V	>10:1
	- 50.0000 mV	- 50.0443 mV	_____	- 49.9557 mV	1.0E-6 V	>10:1
	0.0000 mV	- 0.0343 mV	_____	+ 0.0343 mV	8.0E-7 V	>10:1
	+ 50.0000 mV	+ 49.9557 mV	_____	+ 50.0443 mV	1.0E-6 V	>10:1
	+100.0000 mV	+ 99.9457 mV	_____	+100.0543 mV	1.2E-6 V	>10:1
	+150.0000 mV	+149.9357 mV	_____	+150.0643 mV	1.4E-6 V	>10:1
	+200.0000 mV	+199.9257 mV	_____	+200.0743 mV	1.6E-6 V	>10:1
1.0V	- 0.8000 V	- 0.8003 V	_____	- 0.7997 V	5.0E-6 V	>10:1
	- 0.6000 V	- 0.6002 V	_____	- 0.5998 V	4.5E-6 V	>10:1
	- 0.4000 V	- 0.4002 V	_____	- 0.3998 V	4.0E-6 V	>10:1
	- 0.2000 V	- 0.2002 V	_____	- 0.1998 V	3.5E-6 V	>10:1
	0.0000 V	- 0.0001 V	_____	+0.0001 V	3.0E-6 V	>10:1
	+0.2000 V	+0.1998 V	_____	+0.2002 V	3.5E-6 V	>10:1
	+0.4000 V	+0.3998 V	_____	+0.4002 V	4.0E-6 V	>10:1
	+0.6000 V	+0.5998 V	_____	+0.6002 V	4.5E-6 V	>10:1
	+0.8000 V	+0.7997 V	_____	+0.8003 V	5.0E-6 V	>10:1
4.0V	- 3.2000 V	- 3.2011 V	_____	- 3.1989 V	1.1E-5 V	>10:1
	- 2.4000 V	- 2.4010 V	_____	- 2.3990 V	9.0E-6 V	>10:1
	- 1.6000 V	- 1.6008 V	_____	- 1.5992 V	7.0E-6 V	>10:1
	- 0.8000 V	- 0.8006 V	_____	- 0.7994 V	5.0E-6 V	>10:1
	0.0000 V	- 0.0005 V	_____	+0.0005 V	3.0E-6 V	>10:1
	+0.8000 V	+0.7994 V	_____	+0.8006 V	5.0E-6 V	>10:1
	+1.6000 V	+1.5992 V	_____	+1.6008 V	7.0E-6 V	>10:1
	+2.4000 V	+2.3990 V	_____	+2.4010 V	9.0E-6 V	>10:1
	+3.2000 V	+3.1989 V	_____	+3.2011 V	1.1E-5 V	>10:1
16.0V	- 12.8000 V	- 12.8045 V	_____	- 12.7955 V	1.0E-4 V	>10:1
	- 9.6000 V	- 9.6039 V	_____	- 9.5961 V	8.8E-5 V	>10:1
	- 6.4000 V	- 6.4033 V	_____	- 6.3967 V	7.6E-5 V	>10:1
	- 3.2000 V	- 3.2026 V	_____	- 3.1974 V	6.3E-5 V	>10:1
	0.0000 V	- 0.0020 V	_____	+ 0.0020 V	5.0E-5 V	>10:1
	+ 3.2000 V	+ 3.1974 V	_____	+ 3.2026 V	6.3E-5 V	>10:1
	+ 6.4000 V	+ 6.3967 V	_____	+ 6.4033 V	7.6E-5 V	>10:1
	+ 9.6000 V	+ 9.5961 V	_____	+ 9.6039 V	8.8E-5 V	>10:1
	+12.8000 V	+12.7955 V	_____	+12.8045 V	1.0E-4 V	>10:1

Table 2-1. Performance Test Record for the HP E1413A Scanning A/D (Page 4 of 16)

Test 2-2: DCV Measurement Accuracy - Option 12 Fixed Filter SCP

Range	Input	Minimum	Measured	Maximum	M.U.	TAR
.0625 V	- 50.0000 mV	- 50.0322 mV	_____	- 49.9678 mV	7.5E-7 V	>10:1
	- 37.0000 mV	- 37.0296 mV	_____	- 36.9704 mV	6.6E-7 V	>10:1
	- 25.0000 mV	- 25.0272 mV	_____	- 24.9728 mV	5.8E-7 V	>10:1
	- 12.0000 mV	- 12.0246 mV	_____	- 11.9754 mV	4.8E-7 V	>10:1
	0.0000 mV	- 0.0222 mV	_____	+ 0.0222 mV	4.0E-7 V	>10:1
	+ 12.0000 mV	+ 11.9754 mV	_____	+ 12.0246 mV	4.8E-7 V	>10:1
	+ 25.0000 mV	+ 24.9728 mV	_____	+ 25.0272 mV	5.8E-7 V	>10:1
	+ 37.0000 mV	+ 36.9704 mV	_____	+ 37.0296 mV	6.6E-7 V	>10:1
	+ 50.0000 mV	+ 49.9678 mV	_____	+ 50.0322 mV	7.5E-7 V	>10:1
.25 V	- 200.0000 mV	- 200.0802 mV	_____	- 199.9198 mV	1.6E-6 V	>10:1
	- 150.0000 mV	- 150.0702 mV	_____	- 149.9298 mV	1.4E-6 V	>10:1
	- 100.0000 mV	- 100.0602 mV	_____	- 99.9398 mV	1.2E-6 V	>10:1
	- 50.0000 mV	- 50.0502 mV	_____	- 49.9498 mV	1.0E-6 V	>10:1
	0.0000 mV	- 0.0402 mV	_____	+ 0.0402 mV	8.0E-7 V	>10:1
	+ 50.0000 mV	+ 49.9498 mV	_____	+ 50.0502 mV	1.0E-6 V	>10:1
	+100.0000 mV	+ 99.9398 mV	_____	+100.0602 mV	1.2E-6 V	>10:1
	+150.0000 mV	+149.9298 mV	_____	+150.0702 mV	1.4E-6 V	>10:1
	+200.0000 mV	+199.9198 mV	_____	+200.0802 mV	1.6E-6 V	>10:1
1.0V	- 0.8000 V	- 0.8003 V	_____	- 0.7997 V	5.0E-6 V	>10:1
	- 0.6000 V	- 0.6002 V	_____	- 0.5998 V	4.5E-6 V	>10:1
	- 0.4000 V	- 0.4002 V	_____	- 0.3998 V	4.0E-6 V	>10:1
	- 0.2000 V	- 0.2002 V	_____	- 0.1998 V	3.5E-6 V	>10:1
	0.0000 V	- 0.0001 V	_____	+0.0001 V	3.0E-6 V	>10:1
	+0.2000 V	+0.1998 V	_____	+0.2002 V	3.5E-6 V	>10:1
	+0.4000 V	+0.3998 V	_____	+0.4002 V	4.0E-6 V	>10:1
	+0.6000 V	+0.5998 V	_____	+0.6002 V	4.5E-6 V	>10:1
	+0.8000 V	+0.7997 V	_____	+0.8003 V	5.0E-6 V	>10:1
4.0V	- 3.2000 V	- 3.2011 V	_____	- 3.1989 V	1.1E-5 V	>10:1
	- 2.4000 V	- 2.4010 V	_____	- 2.3990 V	9.0E-6 V	>10:1
	- 1.6000 V	- 1.6008 V	_____	- 1.5992 V	7.0E-6 V	>10:1
	- 0.8000 V	- 0.8006 V	_____	- 0.7994 V	5.0E-6 V	>10:1
	0.0000 V	- 0.0005 V	_____	+0.0005 V	3.0E-6 V	>10:1
	+0.8000 V	+0.7994 V	_____	+0.8006 V	5.0E-6 V	>10:1
	+1.6000 V	+1.5992 V	_____	+1.6008 V	7.0E-6 V	>10:1
	+2.4000 V	+2.3990 V	_____	+2.4010 V	9.0E-6 V	>10:1
	+3.2000 V	+3.1989 V	_____	+3.2011 V	1.1E-5 V	>10:1
16.0V	- 12.8000 V	- 12.8045 V	_____	- 12.7955 V	1.0E-4 V	>10:1
	- 9.6000 V	- 9.6039 V	_____	- 9.5961 V	8.8E-5 V	>10:1
	- 6.4000 V	- 6.4033 V	_____	- 6.3967 V	7.6E-5 V	>10:1
	- 3.2000 V	- 3.2026 V	_____	- 3.1974 V	6.3E-5 V	>10:1
	0.0000 V	- 0.0020 V	_____	+ 0.0020 V	5.0E-5 V	>10:1
	+ 3.2000 V	+ 3.1974 V	_____	+ 3.2026 V	6.3E-5 V	>10:1
	+ 6.4000 V	+ 6.3967 V	_____	+ 6.4033 V	7.6E-5 V	>10:1
	+ 9.6000 V	+ 9.5961 V	_____	+ 9.6039 V	8.8E-5 V	>10:1
	+12.8000 V	+12.7955 V	_____	+12.8045 V	1.0E-4 V	>10:1

Table 2-1. Performance Test Record for the HP E1413A Scanning A/D (Page 5 of 16)

Test 2-3: DCV Measurement Accuracy - Option 13 Amplifier+Filter SCP (Gain X1, 2 Hz Filter)

Range	Input	Minimum	Measured	Maximum	M.U.	TAR
.0625 V	- 50.0000 mV	- 50.0490 mV	_____	- 49.9510 mV	7.5E-7 V	>10:1
	- 37.0000 mV	- 37.0464 mV	_____	- 36.9536 mV	6.6E-7 V	>10:1
	- 25.0000 mV	- 25.0440 mV	_____	- 24.9560 mV	5.8E-7 V	>10:1
	- 12.0000 mV	- 12.0414 mV	_____	- 11.9586 mV	4.8E-7 V	>10:1
	0.0000 mV	- 0.0390 mV	_____	+ 0.0390 mV	4.0E-7 V	>10:1
	+ 12.0000 mV	+ 11.9586 mV	_____	+ 12.0414 mV	4.8E-7 V	>10:1
	+ 25.0000 mV	+ 24.9560 mV	_____	+ 25.0440 mV	5.8E-7 V	>10:1
	+ 37.0000 mV	+ 36.9536 mV	_____	+ 37.0464 mV	6.6E-7 V	>10:1
	+ 50.0000 mV	+ 49.9510 mV	_____	+ 50.0490 mV	7.5E-7 V	>10:1
.25 V	- 200.0000 mV	- 200.0860 mV	_____	- 199.9140 mV	1.6E-6 V	>10:1
	- 150.0000 mV	- 150.0760 mV	_____	- 149.9240 mV	1.4E-6 V	>10:1
	- 100.0000 mV	- 100.0660 mV	_____	- 99.9340 mV	1.2E-6 V	>10:1
	- 50.0000 mV	- 50.0560 mV	_____	- 49.9440 mV	1.0E-6 V	>10:1
	0.0000 mV	- 0.0460 mV	_____	+ 0.0460 mV	8.0E-7 V	>10:1
	+ 50.0000 mV	+ 49.9440 mV	_____	+ 50.0560 mV	1.0E-6 V	>10:1
	+100.0000 mV	+ 99.9340 mV	_____	+100.0660 mV	1.2E-6 V	>10:1
	+150.0000 mV	+149.9240 mV	_____	+150.0760 mV	1.4E-6 V	>10:1
	+200.0000 mV	+199.9140 mV	_____	+200.0860 mV	1.6E-6 V	>10:1
1.0V	- 0.8000 V	- 0.8003 V	_____	- 0.7997 V	5.0E-6 V	>10:1
	- 0.6000 V	- 0.6002 V	_____	- 0.5998 V	4.5E-6 V	>10:1
	- 0.4000 V	- 0.4002 V	_____	- 0.3998 V	4.0E-6 V	>10:1
	- 0.2000 V	- 0.2002 V	_____	- 0.1998 V	3.5E-6 V	>10:1
	0.0000 V	- 0.0001 V	_____	+0.0001 V	3.0E-6 V	>10:1
	+0.2000 V	+0.1998 V	_____	+0.2002 V	3.5E-6 V	>10:1
	+0.4000 V	+0.3998 V	_____	+0.4002 V	4.0E-6 V	>10:1
	+0.6000 V	+0.5998 V	_____	+0.6002 V	4.5E-6 V	>10:1
	+0.8000 V	+0.7997 V	_____	+0.8003 V	5.0E-6 V	>10:1
4.0V	- 3.2000 V	- 3.2011 V	_____	- 3.1989 V	1.1E-5 V	>10:1
	- 2.4000 V	- 2.4010 V	_____	- 2.3990 V	9.0E-6 V	>10:1
	- 1.6000 V	- 1.6008 V	_____	- 1.5992 V	7.0E-6 V	>10:1
	- 0.8000 V	- 0.8006 V	_____	- 0.7994 V	5.0E-6 V	>10:1
	0.0000 V	- 0.0005 V	_____	+0.0005 V	3.0E-6 V	>10:1
	+0.8000 V	+0.7994 V	_____	+0.8006 V	5.0E-6 V	>10:1
	+1.6000 V	+1.5992 V	_____	+1.6008 V	7.0E-6 V	>10:1
	+2.4000 V	+2.3990 V	_____	+2.4010 V	9.0E-6 V	>10:1
	+3.2000 V	+3.1989 V	_____	+3.2011 V	1.1E-5 V	>10:1
16.0V	- 12.8000 V	- 12.8045 V	_____	- 12.7955 V	1.0E-4 V	>10:1
	- 9.6000 V	- 9.6039 V	_____	- 9.5961 V	8.8E-5 V	>10:1
	- 6.4000 V	- 6.4033 V	_____	- 6.3967 V	7.6E-5 V	>10:1
	- 3.2000 V	- 3.2026 V	_____	- 3.1974 V	6.3E-5 V	>10:1
	0.0000 V	- 0.0020 V	_____	+ 0.0020 V	5.0E-5 V	>10:1
	+ 3.2000 V	+ 3.1974 V	_____	+ 3.2026 V	6.3E-5 V	>10:1
	+ 6.4000 V	+ 6.3967 V	_____	+ 6.4033 V	7.6E-5 V	>10:1
	+ 9.6000 V	+ 9.5961 V	_____	+ 9.6039 V	8.8E-5 V	>10:1
	+12.8000 V	+12.7955 V	_____	+12.8045 V	1.0E-4 V	>10:1

Table 2-1. Performance Test Record for the HP E1413A Scanning A/D (Page 6 of 16)

Test 2-3: DCV Measurement Accuracy - Option 13 Amplifier+Filter SCP (Gain X1, 10 Hz Filter)

Range	Input	Minimum	Measured	Maximum	M.U.	TAR
.0625 V	- 50.0000 mV	- 50.0455 mV	_____	- 49.9545 mV	7.5E-7 V	>10:1
	- 37.0000 mV	- 37.0429 mV	_____	- 36.9571 mV	6.6E-7 V	>10:1
	- 25.0000 mV	- 25.0405 mV	_____	- 24.9595 mV	5.8E-7 V	>10:1
	- 12.0000 mV	- 12.0379 mV	_____	- 11.9621 mV	4.8E-7 V	>10:1
	0.0000 mV	- 0.0355 mV	_____	+ 0.0355 mV	4.0E-7 V	>10:1
	+ 12.0000 mV	+ 11.9621 mV	_____	+ 12.0379 mV	4.8E-7 V	>10:1
	+ 25.0000 mV	+ 24.9595 mV	_____	+ 25.0405 mV	5.8E-7 V	>10:1
	+ 37.0000 mV	+ 36.9571 mV	_____	+ 37.0429 mV	6.6E-7 V	>10:1
	+ 50.0000 mV	+ 49.9545 mV	_____	+ 50.0455 mV	7.5E-7 V	>10:1
.25 V	- 200.0000 mV	- 200.0835 mV	_____	- 199.9165 mV	1.6E-6 V	>10:1
	- 150.0000 mV	- 150.0735 mV	_____	- 149.9265 mV	1.4E-6 V	>10:1
	- 100.0000 mV	- 100.0635 mV	_____	- 99.9365 mV	1.2E-6 V	>10:1
	- 50.0000 mV	- 50.0535 mV	_____	- 49.9465 mV	1.0E-6 V	>10:1
	0.0000 mV	- 0.0435 mV	_____	+ 0.0435 mV	8.0E-7 V	>10:1
	+ 50.0000 mV	+ 49.9465 mV	_____	+ 50.0535 mV	1.0E-6 V	>10:1
	+100.0000 mV	+ 99.9365 mV	_____	+100.0635 mV	1.2E-6 V	>10:1
	+150.0000 mV	+149.9265 mV	_____	+150.0735 mV	1.4E-6 V	>10:1
	+200.0000 mV	+199.9165 mV	_____	+200.0835 mV	1.6E-6 V	>10:1
1.0V	- 0.8000 V	- 0.8003 V	_____	- 0.7997 V	5.0E-6 V	>10:1
	- 0.6000 V	- 0.6002 V	_____	- 0.5998 V	4.5E-6 V	>10:1
	- 0.4000 V	- 0.4002 V	_____	- 0.3998 V	4.0E-6 V	>10:1
	- 0.2000 V	- 0.2002 V	_____	- 0.1998 V	3.5E-6 V	>10:1
	0.0000 V	- 0.0001 V	_____	+0.0001 V	3.0E-6 V	>10:1
	+0.2000 V	+0.1998 V	_____	+0.2002 V	3.5E-6 V	>10:1
	+0.4000 V	+0.3998 V	_____	+0.4002 V	4.0E-6 V	>10:1
	+0.6000 V	+0.5998 V	_____	+0.6002 V	4.5E-6 V	>10:1
	+0.8000 V	+0.7997 V	_____	+0.8003 V	5.0E-6 V	>10:1
4.0V	- 3.2000 V	- 3.2011 V	_____	- 3.1989 V	1.1E-5 V	>10:1
	- 2.4000 V	- 2.4010 V	_____	- 2.3990 V	9.0E-6 V	>10:1
	- 1.6000 V	- 1.6008 V	_____	- 1.5992 V	7.0E-6 V	>10:1
	- 0.8000 V	- 0.8006 V	_____	- 0.7994 V	5.0E-6 V	>10:1
	0.0000 V	- 0.0005 V	_____	+0.0005 V	3.0E-6 V	>10:1
	+0.8000 V	+0.7994 V	_____	+0.8006 V	5.0E-6 V	>10:1
	+1.6000 V	+1.5992 V	_____	+1.6008 V	7.0E-6 V	>10:1
	+2.4000 V	+2.3990 V	_____	+2.4010 V	9.0E-6 V	>10:1
	+3.2000 V	+3.1989 V	_____	+3.2011 V	1.1E-5 V	>10:1
16.0V	- 12.8000 V	- 12.8045 V	_____	- 12.7955 V	1.0E-4 V	>10:1
	- 9.6000 V	- 9.6039 V	_____	- 9.5961 V	8.8E-5 V	>10:1
	- 6.4000 V	- 6.4033 V	_____	- 6.3967 V	7.6E-5 V	>10:1
	- 3.2000 V	- 3.2026 V	_____	- 3.1974 V	6.3E-5 V	>10:1
	0.0000 V	- 0.0020 V	_____	+ 0.0020 V	5.0E-5 V	>10:1
	+ 3.2000 V	+ 3.1974 V	_____	+ 3.2026 V	6.3E-5 V	>10:1
	+ 6.4000 V	+ 6.3967 V	_____	+ 6.4033 V	7.6E-5 V	>10:1
	+ 9.6000 V	+ 9.5961 V	_____	+ 9.6039 V	8.8E-5 V	>10:1
	+12.8000 V	+12.7955 V	_____	+12.8045 V	1.0E-4 V	>10:1

Table 2-1. Performance Test Record for the HP E1413A Scanning A/D (Page 7 of 16)

Test 2-3: DCV Measurement Accuracy - Option 13 Amplifier+Filter SCP (Gain X1 and 100 Hz Filter)

Range	Input	Minimum	Measured	Maximum	M.U.	TAR
.0625 V	- 50.0000 mV	- 50.0428 mV	_____	- 49.9572 mV	7.5E-7 V	>10:1
	- 37.0000 mV	- 37.0402 mV	_____	- 36.9598 mV	6.6E-7 V	>10:1
	- 25.0000 mV	- 25.0378 mV	_____	- 24.9622 mV	5.8E-7 V	>10:1
	- 12.0000 mV	- 12.0352 mV	_____	- 11.9648 mV	4.8E-7 V	>10:1
	0.0000 mV	- 0.0328 mV	_____	+ 0.0328 mV	4.0E-7 V	>10:1
	+ 12.0000 mV	+ 11.9648 mV	_____	+ 12.0352 mV	4.8E-7 V	>10:1
	+ 25.0000 mV	+ 24.9622 mV	_____	+ 25.0378 mV	5.8E-7 V	>10:1
	+ 37.0000 mV	+ 36.9598 mV	_____	+ 37.0402 mV	6.6E-7 V	>10:1
	+ 50.0000 mV	+ 49.9572 mV	_____	+ 50.0428 mV	7.5E-7 V	>10:1
.25 V	- 200.0000 mV	- 200.0822 mV	_____	- 199.9178 mV	1.6E-6 V	>10:1
	- 150.0000 mV	- 150.0722 mV	_____	- 149.9278 mV	1.4E-6 V	>10:1
	- 100.0000 mV	- 100.0622 mV	_____	- 99.9378 mV	1.2E-6 V	>10:1
	- 50.0000 mV	- 50.0522 mV	_____	- 49.9478 mV	1.0E-6 V	>10:1
	0.0000 mV	- 0.0422 mV	_____	+ 0.0422 mV	8.0E-7 V	>10:1
	+ 50.0000 mV	+ 49.9478 mV	_____	+ 50.0522 mV	1.0E-6 V	>10:1
	+100.0000 mV	+ 99.9378 mV	_____	+100.0622 mV	1.2E-6 V	>10:1
	+150.0000 mV	+149.9278 mV	_____	+150.0722 mV	1.4E-6 V	>10:1
	+200.0000 mV	+199.9178 mV	_____	+200.0822 mV	1.6E-6 V	>10:1
1.0V	- 0.8000 V	- 0.8003 V	_____	- 0.7997 V	5.0E-6 V	>10:1
	- 0.6000 V	- 0.6002 V	_____	- 0.5998 V	4.5E-6 V	>10:1
	- 0.4000 V	- 0.4002 V	_____	- 0.3998 V	4.0E-6 V	>10:1
	- 0.2000 V	- 0.2002 V	_____	- 0.1998 V	3.5E-6 V	>10:1
	0.0000 V	- 0.0001 V	_____	+0.0001 V	3.0E-6 V	>10:1
	+0.2000 V	+0.1998 V	_____	+0.2002 V	3.5E-6 V	>10:1
	+0.4000 V	+0.3998 V	_____	+0.4002 V	4.0E-6 V	>10:1
	+0.6000 V	+0.5998 V	_____	+0.6002 V	4.5E-6 V	>10:1
	+0.8000 V	+0.7997 V	_____	+0.8003 V	5.0E-6 V	>10:1
4.0V	- 3.2000 V	- 3.2011 V	_____	- 3.1989 V	1.1E-5 V	>10:1
	- 2.4000 V	- 2.4010 V	_____	- 2.3990 V	9.0E-6 V	>10:1
	- 1.6000 V	- 1.6008 V	_____	- 1.5992 V	7.0E-6 V	>10:1
	- 0.8000 V	- 0.8006 V	_____	- 0.7994 V	5.0E-6 V	>10:1
	0.0000 V	- 0.0005 V	_____	+0.0005 V	3.0E-6 V	>10:1
	+0.8000 V	+0.7994 V	_____	+0.8006 V	5.0E-6 V	>10:1
	+1.6000 V	+1.5992 V	_____	+1.6008 V	7.0E-6 V	>10:1
	+2.4000 V	+2.3990 V	_____	+2.4010 V	9.0E-6 V	>10:1
	+3.2000 V	+3.1989 V	_____	+3.2011 V	1.1E-5 V	>10:1
16.0V	- 12.8000 V	- 12.8045 V	_____	- 12.7955 V	1.0E-4	>10:1
	- 9.6000 V	- 9.6039 V	_____	- 9.5961 V	8.8E-5	>10:1
	- 6.4000 V	- 6.4033 V	_____	- 6.3967 V	7.6E-5	>10:1
	- 3.2000 V	- 3.2026 V	_____	- 3.1974 V	6.3E-5	>10:1
	0.0000 V	- 0.0020 V	_____	+ 0.0020 V	5.0E-5	>10:1
	+ 3.2000 V	+ 3.1974 V	_____	+ 3.2026 V	6.3E-5	>10:1
	+ 6.4000 V	+ 6.3967 V	_____	+ 6.4033 V	7.6E-5	>10:1
	+ 9.6000 V	+ 9.5961 V	_____	+ 9.6039 V	8.8E-5	>10:1
	+12.8000 V	+12.7955 V	_____	+12.8045 V	1.0E-4	>10:1

Table 2-1. Performance Test Record for the HP E1413A Scanning A/D (Page 8 of 16)

Test 2-3: DCV Measurement Accuracy - Option 13 Amplifier+Filter Input SCP (Gain X1, Filter OFF)

Range	Input	Minimum	Measured	Maximum	M.U.	TAR
.0625 V	- 50.0000 mV	- 50.0423 mV	_____	- 49.9577 mV	7.5E-7 V	>10:1
	- 37.0000 mV	- 37.0397 mV	_____	- 36.9603 mV	6.6E-7 V	>10:1
	- 25.0000 mV	- 25.0373 mV	_____	- 24.9627 mV	5.8E-7 V	>10:1
	- 12.0000 mV	- 12.0347 mV	_____	- 11.9653 mV	4.8E-7 V	>10:1
	0.0000 mV	- 0.0323 mV	_____	+ 0.0323 mV	4.0E-7 V	>10:1
	+ 12.0000 mV	+ 11.9653 mV	_____	+ 12.0347 mV	4.8E-7 V	>10:1
	+ 25.0000 mV	+ 24.9627 mV	_____	+ 25.0373 mV	5.8E-7 V	>10:1
	+ 37.0000 mV	+ 36.9603 mV	_____	+ 37.0397 mV	6.6E-7 V	>10:1
	+ 50.0000 mV	+ 49.9577 mV	_____	+ 50.0423 mV	7.5E-7 V	>10:1
.25 V	- 200.0000 mV	- 200.0818 mV	_____	- 199.9182 mV	1.6E-6 V	>10:1
	- 150.0000 mV	- 150.0718 mV	_____	- 149.9282 mV	1.4E-6 V	>10:1
	- 100.0000 mV	- 100.0618 mV	_____	- 99.9382 mV	1.2E-6 V	>10:1
	- 50.0000 mV	- 50.0518 mV	_____	- 49.9482 mV	1.0E-6 V	>10:1
	0.0000 mV	- 0.0418 mV	_____	+ 0.0418 mV	8.0E-7 V	>10:1
	+ 50.0000 mV	+ 49.9482 mV	_____	+ 50.0518 mV	1.0E-6 V	>10:1
	+100.0000 mV	+ 99.9382 mV	_____	+100.0618 mV	1.2E-6 V	>10:1
	+150.0000 mV	+149.9282 mV	_____	+150.0718 mV	1.4E-6 V	>10:1
	+200.0000 mV	+199.9182 mV	_____	+200.0818 mV	1.6E-6 V	>10:1
1.0V	- 0.8000 V	- 0.8003 V	_____	- 0.7997 V	5.0E-6 V	>10:1
	- 0.6000 V	- 0.6002 V	_____	- 0.5998 V	4.5E-6 V	>10:1
	- 0.4000 V	- 0.4002 V	_____	- 0.3998 V	4.0E-6 V	>10:1
	- 0.2000 V	- 0.2002 V	_____	- 0.1998 V	3.5E-6 V	>10:1
	0.0000 V	- 0.0001 V	_____	+0.0001 V	3.0E-6 V	>10:1
	+0.2000 V	+0.1998 V	_____	+0.2002 V	3.5E-6 V	>10:1
	+0.4000 V	+0.3998 V	_____	+0.4002 V	4.0E-6 V	>10:1
	+0.6000 V	+0.5998 V	_____	+0.6002 V	4.5E-6 V	>10:1
	+0.8000 V	+0.7997 V	_____	+0.8003 V	5.0E-6 V	>10:1
4.0V	- 3.2000 V	- 3.2011 V	_____	- 3.1989 V	1.1E-5 V	>10:1
	- 2.4000 V	- 2.4010 V	_____	- 2.3990 V	9.0E-6 V	>10:1
	- 1.6000 V	- 1.6008 V	_____	- 1.5992 V	7.0E-6 V	>10:1
	- 0.8000 V	- 0.8006 V	_____	- 0.7994 V	5.0E-6 V	>10:1
	0.0000 V	- 0.0005 V	_____	+0.0005 V	3.0E-6 V	>10:1
	+0.8000 V	+0.7994 V	_____	+0.8006 V	5.0E-6 V	>10:1
	+1.6000 V	+1.5992 V	_____	+1.6008 V	7.0E-6 V	>10:1
	+2.4000 V	+2.3990 V	_____	+2.4010 V	9.0E-6 V	>10:1
	+3.2000 V	+3.1989 V	_____	+3.2011 V	1.1E-5 V	>10:1
16.0V	- 12.8000 V	- 12.8045 V	_____	- 12.7955 V	1.0E-4	>10:1
	- 9.6000 V	- 9.6039 V	_____	- 9.5961 V	8.8E-5	>10:1
	- 6.4000 V	- 6.4033 V	_____	- 6.3967 V	7.6E-5	>10:1
	- 3.2000 V	- 3.2026 V	_____	- 3.1974 V	6.3E-5	>10:1
	0.0000 V	- 0.0020 V	_____	+ 0.0020 V	5.0E-5	>10:1
	+ 3.2000 V	+ 3.1974 V	_____	+ 3.2026 V	6.3E-5	>10:1
	+ 6.4000 V	+ 6.3967 V	_____	+ 6.4033 V	7.6E-5	>10:1
	+ 9.6000 V	+ 9.5961 V	_____	+ 9.6039 V	8.8E-5	>10:1
	+12.8000 V	+12.7955 V	_____	+12.8045 V	1.0E-4	>10:1

Table 2-1. Performance Test Record for the HP E1413A Scanning A/D (Page 9 of 16)

Test 2-3: DCV Measurement Accuracy - Option 13 Amplifier+Filter SCP (Gain X8 and 2 Hz Filter)

Range	Input	Minimum	Measured	Maximum	M.U.	TAR
.0625 V	- 6.0000 mV	- 6.0107 mV	_____	- 5.9893 mV	4.4E-7 V	>10:1
	- 4.5000 mV	- 4.5104 mV	_____	- 4.4896 mV	4.3E-7 V	>10:1
	- 3.0000 mV	- 3.0101 mV	_____	- 2.9899 mV	4.2E-7 V	>10:1
	- 1.5000 mV	- 1.5098 mV	_____	- 1.4902 mV	4.1E-7 V	>10:1
	0.0000 mV	- 0.0095 mV	_____	+ 0.0095 mV	4.0E-7 V	>10:1
	+ 1.5000 mV	+ 1.4902 mV	_____	+ 1.5098 mV	4.1E-7 V	>10:1
	+ 3.0000 mV	+ 2.9899 mV	_____	+ 3.0101 mV	4.2E-7 V	>10:1
	+ 4.5000 mV	+ 4.4896 mV	_____	+ 4.5104 mV	4.3E-7 V	>10:1
	+ 6.0000 mV	+ 5.9893 mV	_____	+ 6.0107 mV	4.4E-7 V	>10:1
.25 V	- 25.0000 mV	- 25.0220 mV	_____	- 24.9780 mV	5.8E-7 V	>10:1
	- 18.0000 mV	- 18.0206 mV	_____	- 17.9794 mV	5.3E-7 V	>10:1
	- 12.0000 mV	- 12.0194 mV	_____	- 11.9806 mV	4.8E-7 V	>10:1
	- 6.0000 mV	- 6.0182 mV	_____	- 5.9818 mV	4.4E-7 V	>10:1
	0.0000 mV	- 0.0170 mV	_____	+ 0.0170 mV	4.0E-7 V	>10:1
	+ 6.0000 mV	+ 5.9818 mV	_____	+ 6.0182 mV	4.4E-7 V	>10:1
	+12.0000 mV	+ 11.9806 mV	_____	+ 12.0194 mV	4.8E-7 V	>10:1
	+18.0000 mV	+ 17.9794 mV	_____	+ 18.0206 mV	5.3E-7 V	>10:1
	+25.0000 mV	+ 24.9780 mV	_____	+ 25.0220 mV	5.8E-7 V	>10:1
1.0V	- 100.800 mV	- 100.038 mV	_____	- 99.962 mV	1.2E-6 V	>10:1
	- 75.000 mV	- 75.033 mV	_____	- 74.967 mV	1.1E-6 V	>10:1
	- 50.000 mV	- 50.028 mV	_____	- 49.972 mV	1.0E-6 V	>10:1
	- 25.000 mV	- 25.023 mV	_____	- 24.977 mV	9.0E-7 V	>10:1
	0.000 mV	- 0.018 mV	_____	+ 0.018 mV	8.0E-7 V	>10:1
	+ 25.000 mV	+ 24.977 mV	_____	+ 25.023 mV	9.0E-7 V	>10:1
	+ 50.000 mV	+ 49.972 mV	_____	+ 50.028 mV	1.0E-6 V	>10:1
	+ 75.000 mV	+ 74.967 mV	_____	+ 75.033 mV	1.1E-6 V	>10:1
	+100.000 mV	+ 99.962 mV	_____	+100.038 mV	1.2E-6 V	>10:1
4.0V	- 0.4000 V	- 0.4001 V	_____	- 0.3999 V	2.4E-6 V	>10:1
	- 0.3000 V	- 0.3001 V	_____	- 0.2999 V	2.0E-6 V	>10:1
	- 0.2000 V	- 0.2001 V	_____	- 0.1999 V	1.6E-6 V	>10:1
	- 0.1000 V	- 0.1001 V	_____	- 0.0999 V	1.2E-6 V	>10:1
	0.0000 V	- 0.0001 V	_____	+0.0001 V	8.0E-7 V	>10:1
	+0.1000 V	+0.0999 V	_____	+0.1001 V	1.2E-6 V	>10:1
	+0.2000 V	+0.1999 V	_____	+0.2001 V	1.6E-6 V	>10:1
	+0.3000 V	+0.2999 V	_____	+0.3001 V	2.0E-6 V	>10:1
	+0.4000 V	+0.3999 V	_____	+0.4001 V	2.4E-6 V	>10:1
16.0V	- 1.6000 V	- 1.6006 V	_____	- 1.5994 V	7.0E-6 V	>10:1
	- 1.2000 V	- 1.2005 V	_____	- 1.1995 V	6.0E-6 V	>10:1
	- 0.8000 V	- 0.8004 V	_____	- 0.7996 V	5.0E-6 V	>10:1
	- 0.4000 V	- 0.4003 V	_____	- 0.3997 V	4.0E-6 V	>10:1
	0.0000 V	- 0.0002 V	_____	+0.0002 V	3.0E-6 V	>10:1
	+0.4000 V	+0.3997 V	_____	+0.4003 V	4.0E-6 V	>10:1
	+0.8000 V	+0.7996 V	_____	+0.8004 V	5.0E-6 V	>10:1
	+1.2000 V	+1.1995 V	_____	+1.2005 V	6.0E-6 V	>10:1
	+1.6000 V	+1.5994 V	_____	+1.6006 V	7.0E-6 V	>10:1

Table 2-1. Performance Test Record for the HP E1413A Scanning A/D (Page 10 of 16)

Test 2-3: DCV Measurement Accuracy - Option 13 Amplifier+Filter SCP (Gain X8 and 10 Hz Filter)

Range	Input	Minimum	Measured	Maximum	M.U.	TAR
.0625 V	- 6.0000 mV	- 6.0103 mV	_____	- 5.9897 mV	4.4E-7 V	>10:1
	- 4.5000 mV	- 4.5100 mV	_____	- 4.4900 mV	4.3E-7 V	>10:1
	- 3.0000 mV	- 3.0097 mV	_____	- 2.9903 mV	4.2E-7 V	>10:1
	- 1.5000 mV	- 1.5094 mV	_____	- 1.4906 mV	4.1E-7 V	>10:1
	0.0000 mV	- 0.0091 mV	_____	+ 0.0091 mV	4.0E-7 V	>10:1
	+ 1.5000 mV	+ 1.4906 mV	_____	+ 1.5094 mV	4.1E-7 V	>10:1
	+ 3.0000 mV	+ 2.9903 mV	_____	+ 3.0097 mV	4.2E-7 V	>10:1
	+ 4.5000 mV	+ 4.4900 mV	_____	+ 4.5100 mV	4.3E-7 V	>10:1
	+ 6.0000 mV	+ 5.9897 mV	_____	+ 6.0103 mV	4.4E-7 V	>10:1
.25 V	- 25.0000 mV	- 25.0200 mV	_____	- 24.9800 mV	5.8E-7 V	>10:1
	- 18.0000 mV	- 18.0186 mV	_____	- 17.9814 mV	5.3E-7 V	>10:1
	- 12.0000 mV	- 12.0174 mV	_____	- 11.9826 mV	4.8E-7 V	>10:1
	- 6.0000 mV	- 6.0162 mV	_____	- 5.9838 mV	4.4E-7 V	>10:1
	0.0000 mV	- 0.0150 mV	_____	+ 0.0150 mV	4.0E-7 V	>10:1
	+ 6.0000 mV	+ 5.9838 mV	_____	+ 6.0162 mV	4.4E-7 V	>10:1
	+12.0000 mV	+ 11.9826 mV	_____	+ 12.0174 mV	4.8E-7 V	>10:1
	+18.0000 mV	+ 17.9814 mV	_____	+ 18.0186 mV	5.3E-7 V	>10:1
	+25.0000 mV	+ 24.9800 mV	_____	+ 25.0200 mV	5.8E-7 V	>10:1
1.0V	- 100.800 mV	- 100.0373 mV	_____	- 99.9627 mV	1.2E-6 V	>10:1
	- 75.000 mV	- 75.0323 mV	_____	- 74.9677 mV	1.1E-6 V	>10:1
	- 50.000 mV	- 50.0273 mV	_____	- 49.9727 mV	1.0E-6 V	>10:1
	- 25.000 mV	- 25.0223 mV	_____	- 24.9777 mV	9.0E-7 V	>10:1
	0.000 mV	- 0.0173 mV	_____	+ 0.0173 mV	8.0E-7 V	>10:1
	+ 25.000 mV	+ 24.9777 mV	_____	+ 25.0223 mV	9.0E-7 V	>10:1
	+ 50.000 mV	+ 49.9727 mV	_____	+ 50.0273 mV	1.0E-6 V	>10:1
	+ 75.000 mV	+ 74.9677 mV	_____	+ 75.0323 mV	1.1E-6 V	>10:1
	+100.000 mV	+ 99.9627 mV	_____	+100.0373 mV	1.2E-6 V	>10:1
4.0V	- 0.4000 V	- 0.4001 V	_____	- 0.3999 V	2.4E-6 V	>10:1
	- 0.3000 V	- 0.3001 V	_____	- 0.2999 V	2.0E-6 V	>10:1
	- 0.2000 V	- 0.2001 V	_____	- 0.1999 V	1.6E-6 V	>10:1
	- 0.1000 V	- 0.1001 V	_____	- 0.0999 V	1.2E-6 V	>10:1
	0.0000 V	- 0.0001 V	_____	+0.0001 V	8.0E-7 V	>10:1
	+0.1000 V	+0.0999 V	_____	+0.1001 V	1.2E-6 V	>10:1
	+0.2000 V	+0.1999 V	_____	+0.2001 V	1.6E-6 V	>10:1
	+0.3000 V	+0.2999 V	_____	+0.3001 V	2.0E-6 V	>10:1
	+0.4000 V	+0.3999 V	_____	+0.4001 V	2.4E-6 V	>10:1
16.0V	- 1.6000 V	- 1.6006 V	_____	- 1.5994 V	7.0E-6 V	>10:1
	- 1.2000 V	- 1.2005 V	_____	- 1.1995 V	6.0E-6 V	>10:1
	- 0.8000 V	- 0.8004 V	_____	- 0.7996 V	5.0E-6 V	>10:1
	- 0.4000 V	- 0.4003 V	_____	- 0.3997 V	4.0E-6 V	>10:1
	0.0000 V	- 0.0002 V	_____	+0.0002 V	3.0E-6 V	>10:1
	+0.4000 V	+0.3997 V	_____	+0.4003 V	4.0E-6 V	>10:1
	+0.8000 V	+0.7996 V	_____	+0.8004 V	5.0E-6 V	>10:1
	+1.2000 V	+1.1995 V	_____	+1.2005 V	6.0E-6 V	>10:1
	+1.6000 V	+1.5994 V	_____	+1.6006 V	7.0E-6 V	>10:1

Table 2-1. Performance Test Record for the HP E1413A Scanning A/D (Page 11 of 16)

Test 2-3: DCV Measurement Accuracy - Option 13 Amplifier+Filter SCP (Gain X8 and 100 Hz Filter)

Range	Input	Minimum	Measured	Maximum	M.U.	TAR
.0625 V	- 6.0000 mV	- 6.0099 mV	_____	- 5.9901 mV	4.4E-7 V	>10:1
	- 4.5000 mV	- 4.5096 mV	_____	- 4.4904 mV	4.3E-7 V	>10:1
	- 3.0000 mV	- 3.0093 mV	_____	- 2.9907 mV	4.2E-7 V	>10:1
	- 1.5000 mV	- 1.5090 mV	_____	- 1.4910 mV	4.1E-7 V	>10:1
	0.0000 mV	- 0.0087 mV	_____	+ 0.0087 mV	4.0E-7 V	>10:1
	+ 1.5000 mV	+ 1.4910 mV	_____	+ 1.5090 mV	4.1E-7 V	>10:1
	+ 3.0000 mV	+ 2.9907 mV	_____	+ 3.0093 mV	4.2E-7 V	>10:1
	+ 4.5000 mV	+ 4.4904 mV	_____	+ 4.5096 mV	4.3E-7 V	>10:1
	+ 6.0000 mV	+ 5.9901 mV	_____	+ 6.0099 mV	4.4E-7 V	>10:1
.25 V	- 25.0000 mV	- 25.0153 mV	_____	- 24.9847 mV	5.8E-7 V	>10:1
	- 18.0000 mV	- 18.0139 mV	_____	- 17.9861 mV	5.3E-7 V	>10:1
	- 12.0000 mV	- 12.0127 mV	_____	- 11.9873 mV	4.8E-7 V	>10:1
	- 6.0000 mV	- 6.0115 mV	_____	- 5.9885 mV	4.4E-7 V	>10:1
	0.0000 mV	- 0.0103 mV	_____	+ 0.0103 mV	4.0E-7 V	>10:1
	+ 6.0000 mV	+ 5.9885 mV	_____	+ 6.0115 mV	4.4E-7 V	>10:1
	+12.0000 mV	+ 11.9873 mV	_____	+ 12.0127 mV	4.8E-7 V	>10:1
	+18.0000 mV	+ 17.9861 mV	_____	+ 18.0139 mV	5.3E-7 V	>10:1
	+25.0000 mV	+ 24.9847 mV	_____	+ 25.0153 mV	5.8E-7 V	>10:1
1.0V	- 100.800 mV	- 100.0370 mV	_____	- 99.9630 mV	1.2E-6 V	>10:1
	- 75.000 mV	- 75.0320 mV	_____	- 74.9680 mV	1.1E-6 V	>10:1
	- 50.000 mV	- 50.0270 mV	_____	- 49.9730 mV	1.0E-6 V	>10:1
	- 25.000 mV	- 25.0220 mV	_____	- 24.9780 mV	9.0E-7 V	>10:1
	0.000 mV	- 0.0170 mV	_____	+ 0.0170 mV	8.0E-7 V	>10:1
	+ 25.000 mV	+ 24.9780 mV	_____	+ 25.0220 mV	9.0E-7 V	>10:1
	+ 50.000 mV	+ 49.9730 mV	_____	+ 50.0270 mV	1.0E-6 V	>10:1
	+ 75.000 mV	+ 74.9680 mV	_____	+ 75.0320 mV	1.1E-6 V	>10:1
	+100.000 mV	+ 99.9630 mV	_____	+100.0370 mV	1.2E-6 V	>10:1
4.0V	- 0.4000 V	- 0.4001 V	_____	- 0.3999 V	2.4E-6 V	>10:1
	- 0.3000 V	- 0.3001 V	_____	- 0.2999 V	2.0E-6 V	>10:1
	- 0.2000 V	- 0.2001 V	_____	- 0.1999 V	1.6E-6 V	>10:1
	- 0.1000 V	- 0.1001 V	_____	- 0.0999 V	1.2E-6 V	>10:1
	0.0000 V	- 0.0001 V	_____	+0.0001 V	8.0E-7 V	>10:1
	+0.1000 V	+0.0999 V	_____	+0.1001 V	1.2E-6 V	>10:1
	+0.2000 V	+0.1999 V	_____	+0.2001 V	1.6E-6 V	>10:1
	+0.3000 V	+0.2999 V	_____	+0.3001 V	2.0E-6 V	>10:1
	+0.4000 V	+0.3999 V	_____	+0.4001 V	2.4E-6 V	>10:1
16.0V	- 1.6000 V	- 1.6006 V	_____	- 1.5994 V	7.0E-6 V	>10:1
	- 1.2000 V	- 1.2005 V	_____	- 1.1995 V	6.0E-6 V	>10:1
	- 0.8000 V	- 0.8004 V	_____	- 0.7996 V	5.0E-6 V	>10:1
	- 0.4000 V	- 0.4003 V	_____	- 0.3997 V	4.0E-6 V	>10:1
	0.0000 V	- 0.0002 V	_____	+0.0002 V	3.0E-6 V	>10:1
	+0.4000 V	+0.3997 V	_____	+0.4003 V	4.0E-6 V	>10:1
	+0.8000 V	+0.7996 V	_____	+0.8004 V	5.0E-6 V	>10:1
	+1.2000 V	+1.1995 V	_____	+1.2005 V	6.0E-6 V	>10:1
	+1.6000 V	+1.5994 V	_____	+1.6006 V	7.0E-6 V	>10:1

Table 2-1. Performance Test Record for the HP E1413A Scanning A/D (Page 12 of 16)

Test 2-3: DCV Measurement Accuracy - Option 13 Amplifier+Filter SCP (Gain X8 and Filter OFF)

Range	Input	Minimum	Measured	Maximum	M.U.	TAR
.0625 V	- 6.0000 mV	- 6.0098 mV	_____	- 5.9902 mV	4.4E-7 V	>10:1
	- 4.5000 mV	- 4.5095 mV	_____	- 4.4905 mV	4.3E-7 V	>10:1
	- 3.0000 mV	- 3.0092 mV	_____	- 2.9908 mV	4.2E-7 V	>10:1
	- 1.5000 mV	- 1.5089 mV	_____	- 1.4911 mV	4.1E-7 V	>10:1
	0.0000 mV	- 0.0086 mV	_____	+ 0.0086 mV	4.0E-7 V	>10:1
	+ 1.5000 mV	+ 1.4911 mV	_____	+ 1.5089 mV	4.1E-7 V	>10:1
	+ 3.0000 mV	+ 2.9908 mV	_____	+ 3.0092 mV	4.2E-7 V	>10:1
	+ 4.5000 mV	+ 4.4905 mV	_____	+ 4.5095 mV	4.3E-7 V	>10:1
	+ 6.0000 mV	+ 5.9902 mV	_____	+ 6.0098 mV	4.4E-7 V	>10:1
.25 V	- 25.0000 mV	- 25.0152 mV	_____	- 24.9848 mV	5.8E-7 V	>10:1
	- 18.0000 mV	- 18.0138 mV	_____	- 17.9862 mV	5.3E-7 V	>10:1
	- 12.0000 mV	- 12.0126 mV	_____	- 11.9874 mV	4.8E-7 V	>10:1
	- 6.0000 mV	- 6.0114 mV	_____	- 5.9886 mV	4.4E-7 V	>10:1
	0.0000 mV	- 0.0102 mV	_____	+ 0.0102 mV	4.0E-7 V	>10:1
	+ 6.0000 mV	+ 5.9886 mV	_____	+ 6.0114 mV	4.4E-7 V	>10:1
	+12.0000 mV	+ 11.9874 mV	_____	+ 12.0126 mV	4.8E-7 V	>10:1
	+18.0000 mV	+ 17.9862 mV	_____	+ 18.0138 mV	5.3E-7 V	>10:1
	+25.0000 mV	+ 24.9848 mV	_____	+ 25.0152 mV	5.8E-7 V	>10:1
1.0V	- 100.800 mV	- 100.0369 mV	_____	- 99.9631 mV	1.2E-6 V	>10:1
	- 75.000 mV	- 75.0319 mV	_____	- 74.9681 mV	1.1E-6 V	>10:1
	- 50.000 mV	- 50.0269 mV	_____	- 49.9731 mV	1.0E-6 V	>10:1
	- 25.000 mV	- 25.0219 mV	_____	- 24.9781 mV	9.0E-7 V	>10:1
	0.000 mV	- 0.0169 mV	_____	+ 0.0171 mV	8.0E-7 V	>10:1
	+ 25.000 mV	+ 24.9781 mV	_____	+ 25.0219 mV	9.0E-7 V	>10:1
	+ 50.000 mV	+ 49.9731 mV	_____	+ 50.0269 mV	1.0E-6 V	>10:1
	+ 75.000 mV	+ 74.9681 mV	_____	+ 75.0319 mV	1.1E-6 V	>10:1
	+100.000 mV	+ 99.9631 mV	_____	+100.0369 mV	1.2E-6 V	>10:1
4.0V	- 0.4000 V	- 0.4001 V	_____	- 0.3999 V	2.4E-6 V	>10:1
	- 0.3000 V	- 0.3001 V	_____	- 0.2999 V	2.0E-6 V	>10:1
	- 0.2000 V	- 0.2001 V	_____	- 0.1999 V	1.6E-6 V	>10:1
	- 0.1000 V	- 0.1001 V	_____	- 0.0999 V	1.2E-6 V	>10:1
	0.0000 V	- 0.0001 V	_____	+0.0001 V	8.0E-7 V	>10:1
	+0.1000 V	+0.0999 V	_____	+0.1001 V	1.2E-6 V	>10:1
	+0.2000 V	+0.1999 V	_____	+0.2001 V	1.6E-6 V	>10:1
	+0.3000 V	+0.2999 V	_____	+0.3001 V	2.0E-6 V	>10:1
	+0.4000 V	+0.3999 V	_____	+0.4001 V	2.4E-6 V	>10:1
16.0V	- 1.6000 V	- 1.6006 V	_____	- 1.5994 V	7.0E-6 V	>10:1
	- 1.2000 V	- 1.2005 V	_____	- 1.1995 V	6.0E-6 V	>10:1
	- 0.8000 V	- 0.8004 V	_____	- 0.7996 V	5.0E-6 V	>10:1
	- 0.4000 V	- 0.4003 V	_____	- 0.3997 V	4.0E-6 V	>10:1
	0.0000 V	- 0.0002 V	_____	+0.0002 V	3.0E-6 V	>10:1
	+0.4000 V	+0.3997 V	_____	+0.4003 V	4.0E-6 V	>10:1
	+0.8000 V	+0.7996 V	_____	+0.8004 V	5.0E-6 V	>10:1
	+1.2000 V	+1.1995 V	_____	+1.2005 V	6.0E-6 V	>10:1
	+1.6000 V	+1.5994 V	_____	+1.6006 V	7.0E-6 V	>10:1

Table 2-1. Performance Test Record for the HP E1413A Scanning A/D (Page 13 of 16)

Test 2-3: DCV Measurement Accuracy - Option 13 Amplifier+Filter SCP (Gain X64 and 2 Hz Filter)

Range	Input	Minimum	Measured	Maximum	M.U.	TAR
.25 V	- 3.0000 mV	- 3.0048 mV	_____	- 2.9952 mV	4.2E-7 V	>10:1
	- 2.5000 mV	- 2.5057 mV	_____	- 2.4953 mV	4.2E-7 V	>10:1
	- 1.5000 mV	- 1.5045 mV	_____	- 1.4955 mV	4,1E-7 V	>10:1
	- 0.8000 mV	- 0.8044 mV	_____	- 0.7956 mV	4.1E-7 V	>10:1
	0.0000 mV	- 0.0042 mV	_____	+0.0042 mV	4.0E-7 V	10:1
	+0.8000 mV	+0.7956 mV	_____	+0.8044 mV	4.1E-7 V	>10:1
	+1.5000 mV	+1.4955 mV	_____	+1.5045 mV	4.1E-7 V	>10:1
	+2.5000 mV	+2.4953 mV	_____	+2.5047 mV	4.2E-7 V	>10:1
	+3.0000 mV	+2.9952 mV	_____	+3.0048 mV	4.2E-7 V	>10:1
1.0V	- 12.8000 mV	- 12.8075 mV	_____	- 12.7925 mV	4.9E-7 V	>10:1
	- 9.6000 mV	- 9.6068 mV	_____	- 9.5932 mV	4.7E-7 V	>10:1
	- 6.4000 mV	- 6.4062 mV	_____	- 6.3938 mV	4.4E-7 V	>10:1
	- 3.2000 mV	- 3.2055 mV	_____	- 3.1945 mV	4.2E-7 V	>10:1
	0.0000 mV	- 0.0049 mV	_____	+ 0.0049 mV	4.0E-7 V	>10:1
	+ 3.2000 mV	+ 3.1945 mV	_____	+ 3.2055 mV	4.2E-7 V	>10:1
	+ 6.4000 mV	+ 6.3938 mV	_____	+ 6.4062 mV	4.4E-7 V	>10:1
	+ 9.6000 mV	+ 9.5932 mV	_____	+ 9.6068 mV	4.7E-7 V	>10:1
	+12.8000 mV	+12.7925 mV	_____	+12.8075 mV	4.9E-7 V	>10:1
4.0V	- 50.0000 mV	- 50.0192 mV	_____	- 49.9808 mV	7.5E-7 V	>10:1
	- 37.5000 mV	- 37.5167 mV	_____	- 37.4833 mV	6.6E-7 V	>10:1
	- 25.0000 mV	- 25.0142 mV	_____	- 24.9858 mV	5.8E-7 V	>10:1
	- 12.5000 mV	- 12.5117 mV	_____	- 12.4883 mV	4.9E-7 V	>10:1
	0.0000 mV	- 0.0092 mV	_____	+ 0.0092 mV	4.0E-7 V	>10:1
	+12.5000 mV	+12.4883 mV	_____	+12.5117 mV	4.9E-7 V	>10:1
	+25.0000 mV	+24.9858 mV	_____	+25.0142 mV	5.8E-7 V	>10:1
	+37.5000 mV	+37.4833 mV	_____	+37.5167 mV	6.6E-7 V	>10:1
	+50.0000 mV	+49.9808 mV	_____	+50.0192 mV	7.5E-7 V	>10:1
16.0V	- 200.0000 mV	- 200.0712 mV	_____	- 199.9288 mV	1.2E-6 V	>10:1
	- 150.0000 mV	- 150.0612 mV	_____	- 149.9388 mV	1.0E-6 V	>10:1
	- 100.0000 mV	- 100.0512 mV	_____	- 99.9488 mV	8.0E-7 V	>10:1
	- 50.0000 mV	- 50.0412 mV	_____	- 49.9588 mV	6.0E-7 V	>10:1
	0.0000 mV	- 0.0312 mV	_____	+ 0.0312 mV	4.0E-7 V	>10:1
	+ 50.0000 mV	+ 49.9588 mV	_____	+ 50.0412 mV	6.0E-7 V	>10:1
	+100.0000 mV	+ 99.9488 mV	_____	+100.0512 mV	8.0E-7 V	>10:1
	+150.0000 mV	+149.9388 mV	_____	+150.0612 mV	1.0E-6 V	>10:1
	+200.0000 mV	+199.9288 mV	_____	+200.0712 mV	1.2E-6 V	>10:1

Table 2-1. Performance Test Record for the HP E1413A Scanning A/D (Page 14 of 16)

Test 2-3: DCV Measurement Accuracy - Option 13 Amplifier+Filter SCP (Gain X64 and 10 Hz Filter)

Range	Input	Minimum	Measured	Maximum	M.U.	TAR
.25 V	- 3.0000 mV	- 3.0042 mV	_____	- 2.9958 mV	4.2E-7 V	10:1
	- 2.5000 mV	- 2.5041 mV	_____	- 2.4959 mV	4.2E-7 V	10:1
	- 1.5000 mV	- 1.5039 mV	_____	- 1.4961 mV	4,1E-7 V	10:1
	- 0.8000 mV	- 0.8038 mV	_____	- 0.7962 mV	4.1E-7 V	9:1
	0.0000 mV	- 0.0036 mV	_____	+0.0036 mV	4.0E-7 V	9:1
	+0.8000 mV	+0.7962 mV	_____	+0.8038 mV	4.1E-7 V	9:1
	+1.5000 mV	+1.4961 mV	_____	+1.5039 mV	4.1E-7 V	10:1
	+2.5000 mV	+2.4959 mV	_____	+2.5041 mV	4.2E-7 V	10:1
	+3.0000 mV	+2.9958 mV	_____	+3.0042 mV	4.2E-7 V	10:1
1.0V	- 12.8000 mV	- 12.8069 mV	_____	- 12.7931 mV	4.9E-7 V	>10:1
	- 9.6000 mV	- 9.6062 mV	_____	- 9.5938 mV	4.7E-7 V	>10:1
	- 6.4000 mV	- 6.4056 mV	_____	- 6.3944 mV	4.4E-7 V	>10:1
	- 3.2000 mV	- 3.2049 mV	_____	- 3.1951 mV	4.2E-7 V	>10:1
	0.0000 mV	- 0.0043 mV	_____	+ 0.0043 mV	4.0E-7 V	>10:1
	+ 3.2000 mV	+ 3.1951 mV	_____	+ 3.2049 mV	4.2E-7 V	>10:1
	+ 6.4000 mV	+ 6.3944 mV	_____	+ 6.4056 mV	4.4E-7 V	>10:1
	+ 9.6000 mV	+ 9.5938 mV	_____	+ 9.6062 mV	4.7E-7 V	>10:1
	+12.8000 mV	+12.7931 mV	_____	+12.8069 mV	4.9E-7 V	>10:1
4.0V	- 50.0000 mV	- 50.0187 mV	_____	- 49.9813 mV	7.5E-7 V	>10:1
	- 37.5000 mV	- 37.5162 mV	_____	- 37.4838 mV	6.6E-7 V	>10:1
	- 25.0000 mV	- 25.0137 mV	_____	- 24.9863 mV	5.8E-7 V	>10:1
	- 12.5000 mV	- 12.5112 mV	_____	- 12.4888 mV	4.9E-7 V	>10:1
	0.0000 mV	- 0.0087 mV	_____	+ 0.0087 mV	4.0E-7 V	>10:1
	+12.5000 mV	+12.4888 mV	_____	+12.5112 mV	4.9E-7 V	>10:1
	+25.0000 mV	+24.9863 mV	_____	+25.0137 mV	5.8E-7 V	>10:1
	+37.5000 mV	+37.4838 mV	_____	+37.5162 mV	6.6E-7 V	>10:1
	+50.0000 mV	+49.9813 mV	_____	+50.0187 mV	7.5E-7 V	>10:1
16.0V	- 200.0000 mV	- 200.0710 mV	_____	- 199.9290 mV	1.2E-6 V	>10:1
	- 150.0000 mV	- 150.0610 mV	_____	- 149.9390 mV	1.0E-6 V	>10:1
	- 100.0000 mV	- 100.0510 mV	_____	- 99.9490 mV	8.0E-7 V	>10:1
	- 50.0000 mV	- 50.0410 mV	_____	- 49.9590 mV	6.0E-7 V	>10:1
	0.0000 mV	- 0.0310 mV	_____	+ 0.0310 mV	4.0E-7 V	>10:1
	+ 50.0000 mV	+ 49.9590 mV	_____	+ 50.0410 mV	6.0E-7 V	>10:1
	+100.0000 mV	+ 99.9490 mV	_____	+100.0510 mV	8.0E-7 V	>10:1
	+150.0000 mV	+149.9390 mV	_____	+150.0610 mV	1.0E-6 V	>10:1
	+200.0000 mV	+199.9290 mV	_____	+200.0710 mV	1.2E-6 V	>10:1

Table 2-1. Performance Test Record for the HP E1413A Scanning A/D (Page 15 of 16)

Test 2-3: DCV Measurement Accuracy - Option 13 Amplifier+Filter SCP (Gain X64 and 100 Hz Filter)

Range	Input	Minimum	Measured	Maximum	M.U.	TAR
.25 V	- 3.0000 mV	- 3.0044 mV	_____	- 2.9956 mV	4.2E-7 V	10:1
	- 2.5000 mV	- 2.5043 mV	_____	- 2.4957 mV	4.2E-7 V	10:1
	- 1.5000 mV	- 1.5041 mV	_____	- 1.4959 mV	4,1E-7 V	10:1
	- 0.8000 mV	- 0.8040 mV	_____	- 0.7960 mV	4.1E-7 V	10:1
	0.0000 mV	- 0.0038 mV	_____	+0.0038 mV	4.0E-7 V	9:1
	+0.8000 mV	+0.7960 mV	_____	+0.8040 mV	4.1E-7 V	10:1
	+1.5000 mV	+1.4959 mV	_____	+1.5041 mV	4.1E-7 V	10:1
	+2.5000 mV	+2.4957 mV	_____	+2.5043 mV	4.2E-7 V	10:1
	+3.0000 mV	+2.9956 mV	_____	+3.0044 mV	4.2E-7 V	10:1
1.0V	- 12.8000 mV	- 12.8067 mV	_____	- 12.7933 mV	4.9E-7 V	>10:1
	- 9.6000 mV	- 9.6060 mV	_____	- 9.5940 mV	4.7E-7 V	>10:1
	- 6.4000 mV	- 6.4054 mV	_____	- 6.3946 mV	4.4E-7 V	>10:1
	- 3.2000 mV	- 3.2047 mV	_____	- 3.1953 mV	4.2E-7 V	>10:1
	0.0000 mV	- 0.0041 mV	_____	+ 0.0041 mV	4.0E-7 V	10:1
	+ 3.2000 mV	+ 3.1953 mV	_____	+ 3.2047 mV	4.2E-7 V	>10:1
	+ 6.4000 mV	+ 6.3946 mV	_____	+ 6.4054 mV	4.4E-7 V	>10:1
	+ 9.6000 mV	+ 9.5940 mV	_____	+ 9.6060 mV	4.7E-7 V	>10:1
	+12.8000 mV	+12.7933 mV	_____	+12.8067 mV	4.9E-7 V	>10:1
4.0V	- 50.0000 mV	- 50.0186 mV	_____	- 49.9814 mV	7.5E-7 V	>10:1
	- 37.5000 mV	- 37.5161 mV	_____	- 37.4839 mV	6.6E-7 V	>10:1
	- 25.0000 mV	- 25.0136 mV	_____	- 24.9864 mV	5.8E-7 V	>10:1
	- 12.5000 mV	- 12.5111 mV	_____	- 12.4889 mV	4.9E-7 V	>10:1
	0.0000 mV	- 0.0086 mV	_____	+ 0.0086 mV	4.0E-7 V	>10:1
	+12.5000 mV	+12.4889 mV	_____	+12.5111 mV	4.9E-7 V	>10:1
	+25.0000 mV	+24.9864 mV	_____	+25.0136 mV	5.8E-7 V	>10:1
	+37.5000 mV	+37.4839 mV	_____	+37.5161 mV	6.6E-7 V	>10:1
	+50.0000 mV	+49.9814 mV	_____	+50.0186 mV	7.5E-7 V	>10:1
16.0V	- 200.0000 mV	- 200.0710 mV	_____	- 199.9290 mV	1.2E-6 V	>10:1
	- 150.0000 mV	- 150.0610 mV	_____	- 149.9390 mV	1.0E-6 V	>10:1
	- 100.0000 mV	- 100.0510 mV	_____	- 99.9490 mV	8.0E-7 V	>10:1
	- 50.0000 mV	- 50.0410 mV	_____	- 49.9590 mV	6.0E-7 V	>10:1
	0.0000 mV	- 0.0310 mV	_____	+ 0.0310 mV	4.0E-7 V	>10:1
	+ 50.0000 mV	+ 49.9590 mV	_____	+ 50.0410 mV	6.0E-7 V	>10:1
	+100.0000 mV	+ 99.9490 mV	_____	+100.0510 mV	8.0E-7 V	>10:1
	+150.0000 mV	+149.9390 mV	_____	+150.0610 mV	1.0E-6 V	>10:1
	+200.0000 mV	+199.9290 mV	_____	+200.0710 mV	1.2E-6 V	>10:1

Table 2-1. Performance Test Record for the HP E1413A Scanning A/D (Page 16 of 16)

Test 2-3: DCV Measurement Accuracy - Option 13 Amplifier+Filter SCP (Gain X64 and Filter OFF)

Range	Input	Minimum	Measured	Maximum	M.U.*	TAR**
.25 V	- 3.0000 mV	- 3.0030 mV	_____	- 2.9970 mV	4.2E-7 V	7:1
	- 2.5000 mV	- 2.5029 mV	_____	- 2.4971 mV	4.2E-7 V	7:1
	- 1.5000 mV	- 1.5027 mV	_____	- 1.4973 mV	4,1E-7 V	7:1
	- 0.8000 mV	- 0.8026 mV	_____	- 0.7974 mV	4.1E-7 V	6:1
	0.0000 mV	- 0.0024 mV	_____	+0.0024 mV	4.0E-7 V	6:1
	+0.8000 mV	+0.7974 mV	_____	+0.8026 mV	4.1E-7 V	6:1
	+1.5000 mV	+1.4973 mV	_____	+1.5027 mV	4.1E-7 V	7:1
	+2.5000 mV	+2.4971 mV	_____	+2.5029 mV	4.2E-7 V	7:1
	+3.0000 mV	+2.9970 mV	_____	+3.0030 mV	4.2E-7 V	7:1
1.0V	- 12.8000 mV	- 12.8067 mV	_____	- 12.7933 mV	4.9E-7 V	>10:1
	- 9.6000 mV	- 9.6060 mV	_____	- 9.5940 mV	4.7E-7 V	>10:1
	- 6.4000 mV	- 6.4054 mV	_____	- 6.3946 mV	4.4E-7 V	>10:1
	- 3.2000 mV	- 3.2047 mV	_____	- 3.1953 mV	4.2E-7 V	>10:1
	0.0000 mV	- 0.0041 mV	_____	+ 0.0041 mV	4.0E-7 V	10:1
	+ 3.2000 mV	+ 3.1953 mV	_____	+ 3.2047 mV	4.2E-7 V	>10:1
	+ 6.4000 mV	+ 6.3946 mV	_____	+ 6.4054 mV	4.4E-7 V	>10:1
	+ 9.6000 mV	+ 9.5940 mV	_____	+ 9.6060 mV	4.7E-7 V	>10:1
	+12.8000 mV	+12.7933 mV	_____	+12.8067 mV	4.9E-7 V	>10:1
4.0V	- 50.0000 mV	- 50.0186 mV	_____	- 49.9814 mV	7.5E-7 V	>10:1
	- 37.5000 mV	- 37.5161 mV	_____	- 37.4839 mV	6.6E-7 V	>10:1
	- 25.0000 mV	- 25.0136 mV	_____	- 24.9864 mV	5.8E-7 V	>10:1
	- 12.5000 mV	- 12.5111 mV	_____	- 12.4889 mV	4.9E-7 V	>10:1
	0.0000 mV	- 0.0086 mV	_____	+ 0.0086 mV	4.0E-7 V	>10:1
	+12.5000 mV	+12.4889 mV	_____	+12.5111 mV	4.9E-7 V	>10:1
	+25.0000 mV	+24.9864 mV	_____	+25.0136 mV	5.8E-7 V	>10:1
	+37.5000 mV	+37.4839 mV	_____	+37.5161 mV	6.6E-7 V	>10:1
	+50.0000 mV	+49.9814 mV	_____	+50.0186 mV	7.5E-7 V	>10:1
16.0V	- 200.0000 mV	- 200.0710 mV	_____	- 199.9290 mV	1.2E-6 V	>10:1
	- 150.0000 mV	- 150.0610 mV	_____	- 149.9390 mV	1.0E-6 V	>10:1
	- 100.0000 mV	- 100.0510 mV	_____	- 99.9490mV	8.0E-7 V	>10:1
	- 50.0000 mV	- 50.0410 mV	_____	- 49.9590 mV	6.0E-7 V	>10:1
	0.0000 mV	- 0.0310 mV	_____	+ 0.0310 mV	4.0E-7 V	>10:1
	+ 50.0000 mV	+ 49.9590 mV	_____	+ 50.0410 mV	6.0E-7 V	>10:1
	+100.0000 mV	+ 99.9490 mV	_____	+100.0510 mV	8.0E-7 V	>10:1
	+150.0000 mV	+149.9390 mV	_____	+150.0610 mV	1.0E-6 V	>10:1
	+200.0000 mV	+199.9290 mV	_____	+200.0710 mV	1.2E-6 V	>10:1

3
Adjustments

Introduction

The procedures in this chapter show how to electronically adjust the HP E1413A Scanning A/D to compensate for A/D source voltage and reference resistor offsets.

Recommended Equipment/ Environment

A digital multimeter (DMM) is required for the procedures in this chapter. The HP 3458A is the recommended DMM. Before performing these procedures, allow the HP E1413A to warm up for at least one hour. The temperature should be within ± 1°C of the temperature of the most recent calibration and between 22°C and 24°C.

Flash Memory Access

The Flash Memory Protect Jumper (JM 2201) (see Figure 3-1 for location) is shipped in the "PROG" position. If the jumper is changed to the "PROTect" position, you will not be able to store new calibration constants into Flash Memory (Electrically Erasable Programmable Read Only Memory or EEPROM). If the adjustment program shown in this chapter displays an error message, you may need to change the jumper to the PROG position and rerun the program.

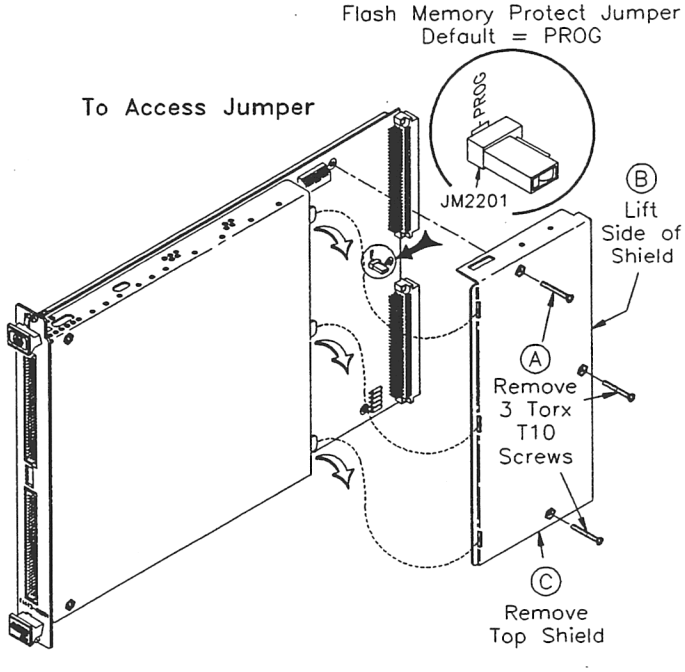

Figure 3-1. Flash Memory Protect Jumper

A/D Adjustment Procedure

This adjustment performs internal A/D adjustments using the CAL:CONF, CAL:VAL, and CAL:STOR commands. (See *Appendix C - Command Reference* for command descriptions.)

Description

The adjustment procedure consists of measuring the values of the 7.5 kΩ reference resistor and ± 16 Vdc voltage source with an external DMM and then entering the values into Scanning A/D RAM. After the new values have been entered into RAM, they can be stored in Flash Memory (Electrically Erasable Programmable Read Only Memory or EEPROM). See Figure 3-2 for commands and steps. You can perform these adjustments using either the Cal Bus connectors on the Scanning A/D or the HOHM, LOHM, HCAL, and LCAL connectors on the Terminal Module.

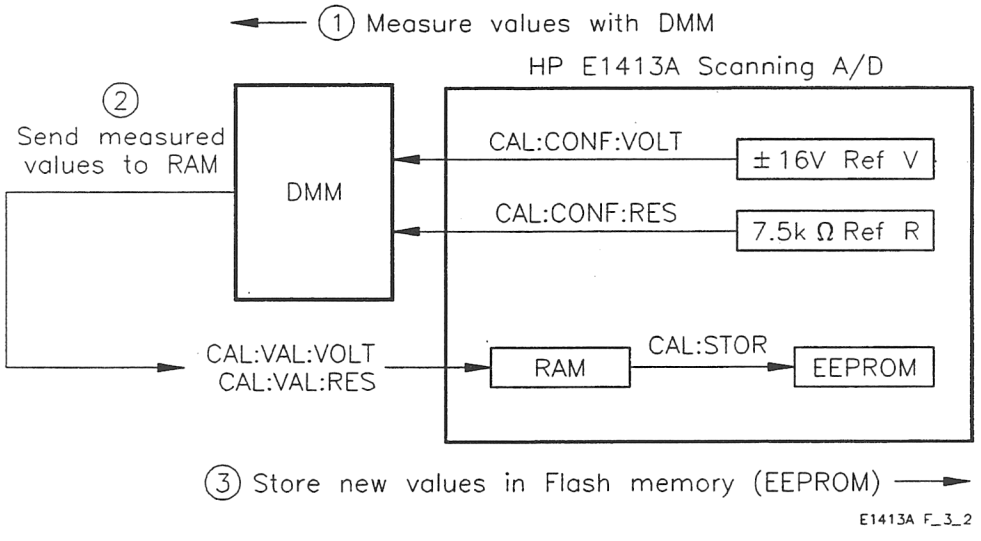

Figure 3-2. Scanning A/D Adjustments

Equipment Setup

- Perform an autocalibration on the HP 3458A DMM (unless an autocal has been performed within the last 24 hours).
- Connect the equipment as shown in Figures 3-3 through 3-6, using the connections on the terminal module or the Cal Bus connections on the Scanning A/D.
- If you use the Cal Bus connections, remove the terminal module and make connections between the DMM and Scanning A/D #1. You can use the 555 mm (22 inch) calibration cable supplied.
- To adjust two or more Scanning A/Ds (one at a time), connect additional HP E1413As (in adjacent mainframe slots) using the 60 mm (2.4 inch) connecting cable supplied. For three or more A/Ds, you must order additional connecting cables as required.

Resistance Measurements - Terminal Module Connections

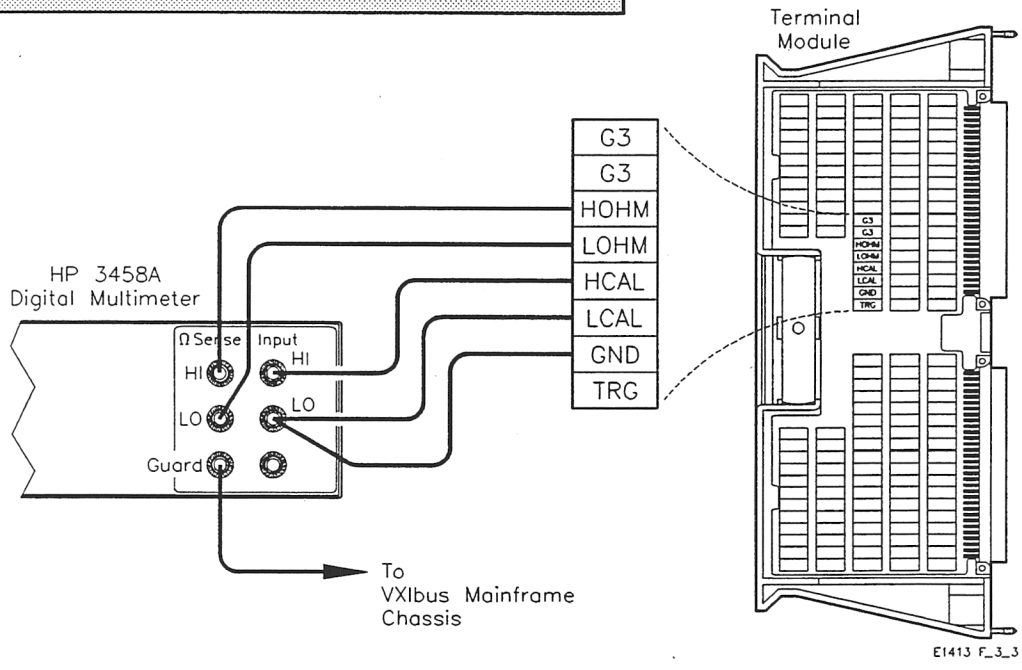

Figure 3-3. Resistance Measurements - Term Mod Conn

Resistance Measurements - Cal Bus Connections

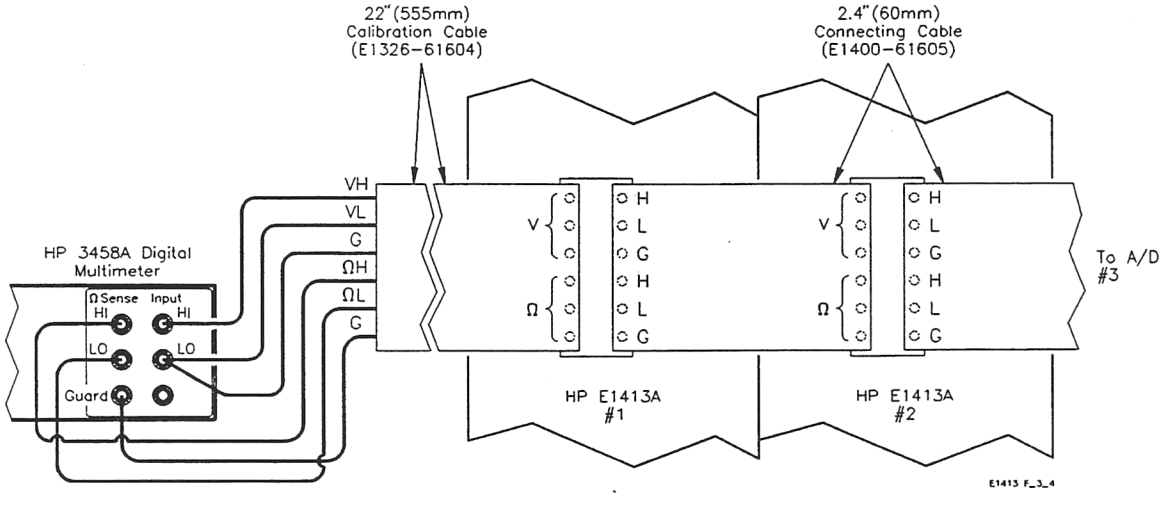

Figure 3-4. Resistance Measurements - Cal Bus Conn

DCV Measurements - Terminal Module Connections

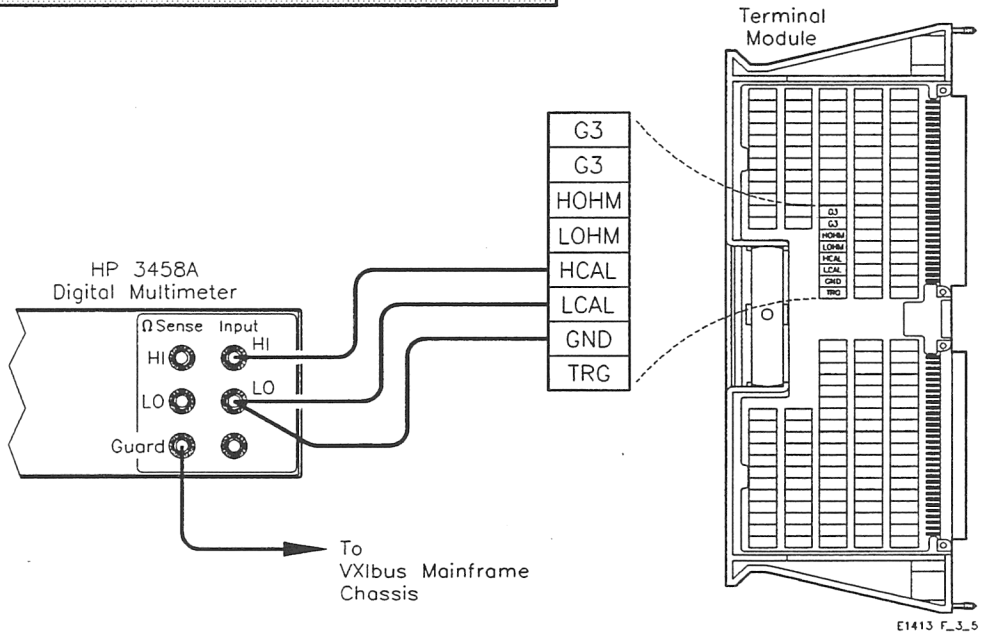

Figure 3-5. DCV Measurements - Term Module Conn

DCV Measurements - Cal Bus Connections

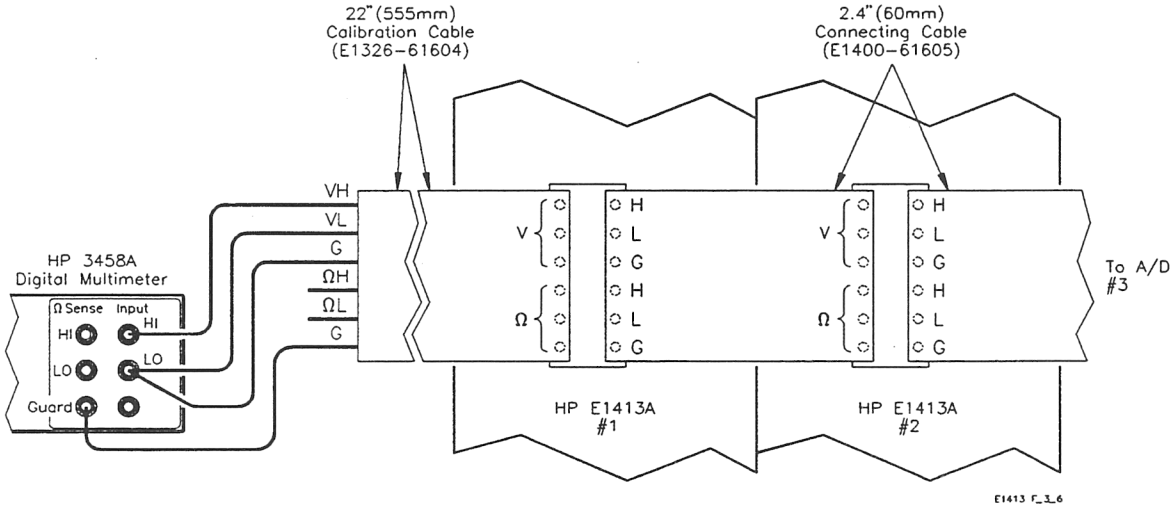

Figure 3-6. DCV Measurements - Cal Bus Conn

Adjustment Procedure

This procedure adjusts the Scanning A/D using the HP 3458A DMM for external measurements.

1 Measure Reference Resistance

[a] Make 4-wire resistance connections (see Figure 3-3 or 3-4)

[b] Reset Scanning A/D:

*RST;*CLS	*Reset and clear status reg*
WAIT 5	*Wait 5 seconds for reset to complete*

[c] Set Scanning A/D to measure resistance

CAL:CONF:RES	*Set for resistance measurements*
*OPC? ENTER statement	*Use *OPC? and ENTER to ensure A/D setup is complete*

[d] Set and Trigger DMM

RESET	*Reset DMM*
FUNC OHMF	*Set 4-wire ohms*
OCOMP ON	*Set offset compensation*
NPLC 20	*Set NPLC 20*
TRIG SGL	*Trigger DMM*
WAIT1	*Wait 1 second*
ENTER *<ref_ohms>*	*Measure value of ref resistor*

[e] Send measured value to Scanning A/D

CAL:VAL:RES *<ref_ohms>*	*Send ref resistor value to E1413A RAM*

2 Make Source Voltage Measurements

[a] Make DCV connections (see Figure 3-5 or 3-6)

[b] Reset Scanning A/D

*RST;*CLS	*Reset and clear status register*
WAIT 5	*Wait 5 seconds for reset to complete*

[c] Set DMM

RESET	*Set DMM for DCV, autorange*
NPLC 20	*Set NPLC 20*

[d] Set Scanning A/D for first voltage measurement

CAL:CONF:VOLT .0625, ZERO *OPC? ENTER statement	*Connect DMM to source voltage, set .0625V range and ZERO source output. Use *OPC? to ensure setup completed*

[e] Trigger DMM and Send Voltage Value to RAM

TRIG SGL WAIT 1 ENTER *<ref_volts>*	*Measure source voltage and store result in ref_volts*

[f] Send measured value to Scanning A/D

CAL:VAL:VOLT *<ref_volts>*	*Send meas voltage value to E1413A RAM*

Perform voltage measurements for all ranges and levels in the order shown in the following table

Range	Level
.0625 V	ZERO
.0625V	FULL-SCALE
.25V	ZERO
.25V	FULL-SCALE
1.0V	ZERO
1.0V	FULL-SCALE
4.0V	ZERO
4.0V	FULL-SCALE
16.0V	ZERO
16.0V	FULL-SCALE

3 Store Results in Flash Memory (EEPROM)

CAL:STOR ADC	*Store new resistance and voltage calibration constants in Flash memory*

Repeat the adjustment procedure for each HP E1413A to be adjusted.

NOTE

As shipped from the factory, the Flash Memory Protect Jumper (JM 2201) is set to the "PROG" position. If the jumper is not set to the PROG position, values cannot be loaded into Flash memory. In this case, the following error message is displayed. If the jumper has been set to the PROTect position, change the setting to the PROG position (see Figure 3-1) and rerun the adjustment procedure.

Error Messages

+3034,"0x4: DSP-Flash rom erase failure"
+3035,"0x8: DSP-Programming voltage not present"
"+0, No error"

Example Program

This program performs A/D adjustments and channel calibrations for an HP E1413A Scanning A/D. An HP 3458A DMM is used to measure the reference resistor and reference voltage values.

NOTE

If you want to perform A/D adjustments for more than one HP E1413A, start by making the HP 3458A DMM connections to HP E1413A #1. Run the program once for each Scanning A/D, and enter the appropriate Logical Address when requested by the program.

```
10!  RE-STORE "ADJSPROC"
20   !
30   Ad=70903
40   Dmm=722
50   CLEAR SCREEN
60   PRINT "Scanning A/D Adjustments"
70   INPUT " Enter Logical Address for this Scanning A/D (default = 70903) ",Ad
80   ASSIGN @Ad TO Ad
90   INPUT " Enter the HP 3458A DMM HP-IB Address (default = 722) ",Dmm
100  ASSIGN @Dmm TO 722
110  !
120  ! ----------Reference Resistor Measurement----------
130  !
140  CLEAR SCREEN
150  PRINT "Resistance Measurement"
160  PRINT
170  PRINT "Make 4-wire ohms connections from DMM to Scanning A/D"
180  PRINT
190  DISP " Press Continue when ready "
200  PAUSE
210  CLEAR SCREEN
220  PRINT "Resetting Scanning A/D ..."
230  OUTPUT @Ad;"*RST;*CLS"
240  WAIT 5
250  CLEAR SCREEN
260 Retry_res:   !
270  PRINT "Measuring reference resistor value ..."
280  OUTPUT @Ad;"CAL:CONF:RES"
290  OUTPUT @Ad;"*OPC?"
300  ENTER @Ad;Opc_r
310  OUTPUT @Dmm;"RESET"
```

Continued on next page

```
320  OUTPUT @Dmm;"FUNC OHMF;OCOMP ON;NPLC 20"
330  WAIT 1
340  OUTPUT @Dmm;"TRIG SGL"
350  ENTER @Dmm;Ref_ohms
360  CLEAR SCREEN
370  PRINT "Reference Resistor Value"
380  PRINT
390  PRINT "Nominal Value:  7.5 kOhms"
400  PRINT USING "15A,X,D.4D,X,5A";"Measured Value:";Ref_ohms*1.E-3;"kOhms"
410  IF Ref_ohms<7450 OR Ref_ohms>7550 THEN
420   BEEP
430   PRINT
440   PRINT "          NOTE"
450   PRINT
460   PRINT "Measured value is too high or low."
470   PRINT "Check DMM and Scanning A/D connections."
480   PRINT "Then, rerun this measurement."
490   DISP " Press Continue to rerun this measurement "
500   PAUSE
510   CLEAR SCREEN
520   GOTO Retry_res
530  ELSE
540  END IF
550  OUTPUT @Ad;"CAL:VAL:RES ";Ref_ohms
560  DISP " Press Continue for Source Voltage Measurements "
570  PAUSE
580  CLEAR SCREEN
590  !
600  ! ————————Source Voltage Measurements ————————
610  !
620  DIM Dmm_rng(1:10),Ref_volts(1:10),Ad_rng(1:10),Zero_fs$(1:10)[4],Err_ msg$[256]
630  DATA .0625,.0625,.25,.25,1.0,1.0,4.0,4.0,16.0,16.0
640  READ Ad_rng(*)
650  DATA ZERO,FSC,ZERO,FSC,ZERO,FSC,ZERO,FSC,ZERO,FSC
660  READ Zero_fs$(*)
670  PRINT "Source Voltage Measurements"
680  PRINT
690  PRINT "Make voltage connections between DMM and Scanning A/D"
700  DISP " Press Continue when ready "
710  PAUSE
720  CLEAR SCREEN
730  OUTPUT @Ad;"*RST"
```

Continued on next page

```
740  WAIT 5
750  OUTPUT @Dmm;"RESET;NPLC 20"
760  WAIT 1
770  !
780  ! —— Measure voltage reference values and send values to A/D RAM ———
790  !
800  FOR J=1 TO 10
810   CLEAR SCREEN
820   PRINT "Measuring Source Voltage ..."
830   PRINT
840   PRINT "Range:";Ad_rng(J);"V"
850    PRINT "Level: ";Zero_fs$(J)
860    OUTPUT @Ad;"CAL:CONF:VOLT "&VAL$(Ad_rng(J))&", "&Zero_fs$(J)
870    OUTPUT @Ad;"*OPC?"
880    ENTER @Ad;Opc_v
890    OUTPUT @Dmm;"TRIG SGL"
900    WAIT 1
910    ENTER @Dmm;Ref_volts(J)
920    OUTPUT @Ad;"CAL:VAL:VOLT ";Ref_volts(J)
930   NEXT J
940   !
950 Fmt:IMAGE(2D.4D,8X,4A,8X,2D.4D,11X,3D.D)
960 Fmt1:IMAGE(2D.4D,8X,4A,8X,2D.4D)
970   CLEAR SCREEN
980   PRINT "Measured Voltage Values"
990   PRINT
1000 PRINT "1. Voltage should be ~90% FULL-SCALE range (except 16V range)."
1010 PRINT "2. For the 16V range, voltage value should be ~10.0V."
1020 PRINT
1030 PRINT "Range (V)     Level      Measured (V)    % of Full-Scale"
1040 PRINT
1050 FOR K=1 TO 10
1060   IF K MODULO 2=0 THEN
1070     PRINT USING Fmt;Ad_rng(K),Zero_fs$(K),Ref_volts(K),(Ref_volts(K)/Ad_rng(K))*100
1080   ELSE
1090     PRINT USING Fmt1;Ad_rng(K),Zero_fs$(K),Ref_volts(K)
1100   END IF
1110 NEXT K
1120 PRINT
1130 PRINT USING "17A,X,D.4D,X,5A";"Resistance Value:";Ref_ohms*1.E-3;"kOhms"
1140 !
1150 ! —— Store resistance and voltage calibration constants in Flash ROM -------
```

Continued on next page

```
1160 !
1170 INPUT " Store these values into Flash memory (EEPROM) (Y/N)? ",Ans$
1180 CLEAR SCREEN
1190 IF Ans$="Y" OR Ans$="y" THEN
1200   OUTPUT @Ad;"CAL:STOR ADC"
1210 ELSE
1220   PRINT "New calibration constants NOT stored in Flash memory"
1230 END IF
1240   !
1250   !------------------------ Error Messages ------------------------
1260   !
1270 REPEAT
1280   OUTPUT @Ad;"SYST:ERR?"
1290   ENTER @Ad;Err_msg$
1300   IF Err_msg$<>"+0,""No error""" THEN
1310     BEEP
1320     PRINT "Error Messages"
1330     PRINT
1340     PRINT Err_msg$
1350     PRINT
1360     PRINT "                    NOTE"
1370     PRINT
1380     PRINT "If errors +3034 and/or +3035 appear, the Flash Memory"
1390     PRINT "Protect jumper (JM 2201) may be in the ""PROTect"""
1400     PRINT "position, and the new calibration constants were not"
1410     PRINT "stored in Flash memory. Check the jumper position and"
1420     PRINT "rerun this adjustment if necessary."
1430   ELSE
1440   END IF
1450 UNTIL Err_msg$="+0,""No error"""
1460 PRINT
1470 PRINT "Scanning A/D Adjustments Completed."
1480 END
```

Typical Display

After the reference resistor and 10 source voltage values are stored in RAM, the results are displayed and the program asks you if you want to store the values into Flash memory. A typical display for measured voltage and resistance values follows.

Measured Voltage Values

1. Voltage should be ~90% FULL-SCALE range (except 16V range).
2. For the 16V range, voltage value should be ~10.0V.

Range (V)	Level	Measured (V)	% of Full-Scale
. 0625	ZERO	.0001	
.0625	FSC	.0564	90.3
.2500	ZERO	.0001	
.2500	FSC	.2253	90.1
1.0000	ZERO	.0001	
1.0000	FSC	.8941	89.4
4.0000	ZERO	.0001	
4.0000	FSC	3.5988	90.0
16.0000	ZERO	.0001	
16.0000	FSC	10.0035	62.5

Resistance Value: 7.4981 kOhms

4
Replaceable Parts

Introduction

This chapter contains information to order replaceable parts and/or exchange modules for the HP E1413A Scanning A/D. To order a part or exchange assembly listed in this chapter, specify the Hewlett-Packard part number and the quantity required. Send the order to your nearest Hewlett-Packard Sales and Support Office.

Exchange Modules

Table 4-1 lists modules described in this manual that may be replaced on an exchange basis (Exchange Modules). Exchange modules are available only on a trade-in basis. Defective modules must be returned for credit. Order modules for spare parts stock by the new module part number.

Table 4-1. E1413A Scanning A/D - Exchange/New Modules

Description	Option	Exchange Part Number	New Part Number
Scanning A/D Module	---	E1413-69201	E1413A
Straight-Through SCP	011	---	E1413A Option 011
Fixed Filter SCP	012	---	E1413A Option 012
Amplifier+Filter SCP	013	E1413-69213	E1413A Option 013

Replaceable Parts Lists

Table 4-2 lists replaceable parts for the HP E1413A Scanning A/D. See "Component Locators" (Figures 4-1 through 4-4) for locations of parts in Table 4-2. Table 4-3 shows reference designators for parts in Table 4-2, and Table 4-4 shows the manufacturer code list for the parts.

NOTE

If a Scanning A/D defect can be traced to a fuse or replaceable mechanical part, replace the fuse and/or part and retest the module. If the defect cannot be traced to a fuse or replaceable mechanical part, replace the entire module. Individual printed circuit assemblies (PCAs) cannot be returned for replacement or exchange. There are no replaceable parts on Signal Conditioning Plug-Ons (SCPs).

Table 4-2. HP E1413A Scanning A/D Replaceable Parts

Reference Designator	HP Part Number	Qty	Description	Mfr Code	Mfr Part Number
			HP E1413A HARDWARE PARTS (FIG 4-1)		
CBL1	E1400-61605	1	CONNECTOR CABLE	28480	E1400-61605
CBL2	E1326-61604	1	CALIBRATION CABLE	28480	E1326-61604
HDL1	E1400-84105	1	EXT HANDLE KIT-BOTTOM	28480	E1400-84105
HDL2	E1400-84106	1	EXT HANDLE KIT-TOP	28480	E1400-84106
PNL1	E1405-00201	1	FRONT PANEL	28480	E1405-01201
SCR5-SCR9	0515-1135	5	SCREW-M3 X 0.5 25MM-LG FLAT-HEAD	28480	0515-1135
SCR10-SCR11	0515-0368	2	SCREW-M2.5 X 0.45 12MM-LG PAN-HEAD	28480	0515-0368
SCR12-SCR13	0515-1375	2	SCREW-M2.5 X 0.45 6MM-LG FLAT-HEAD	83486	343-300-02506
SHD1	E1413-00601	1	TOP SHIELD	28480	E1413-00601
SHD2	E1413-00602	1	BOTTOM SHIELD	28480	E1413-00602
SHD3	E1413-00603	1	COVER SCP	28480	E1413-00603
SHD4	E1413-00604	1	INNER SHIELD	28480	E1413-00604
			A1 PCA REPLACEABLE PARTS (FIG 4-2)		
A1	E1413-66501	1	PRINTED CIRCUIT ASSEMBLY	28480	E1413-66501
F101-F105	2110-0712	5	FUSE-SUBMINIATURE 4A 125V NTD AX	75915	R251004T1
J1-J2	1251-7799	4	CONN-POST TYPE 2.54-PIN-SPCG 96-CONTACT	91662	10-8457-096-002-037
J3	1252-0776	1	CONN-POST TYPE .100-PIN-SPCG 12-CONTACT	00779	102979-6
J4100-J4470[a]	1252-4618	8	50-PIN CONNECTOR 104549-7	00779	104549-7
J4101-J4471[b]	1252-5357	8	50-PIN RECEPTACLE 104550-6	00779	104550-6
JM2201	1251-4682	1	CONN-POST TYPE .100-PIN-SPCG 3-CONTACT	26742	1102-1-103-02
K4100-K4463[c]	0490-1937	67	RELAY 2C 3VDC COIL 1A 125VAC	28480	0490-1937
P1-P2	1251-7799		CONN-POST TYPE 2.54-PIN-SPCG 96-CONTACT	91662	10-8457-096-002-037
SP1	3101-2243	1	SWITCH-DIP ROCKER 8-1A 0.05A 30VDC	81073	76YY22318S
			TERMINAL CASE ASSEMBLY PARTS (FIG 4-3)		
A1	E1400-84401	1	CASE TERMINAL BLOCK ASSEMBLY	28480	E1400-84401
MP1	03852-01201	1	CLAMP	28480	03852-01201
MP2	03852-86701	1	PAD-CLAMP	28480	03852-86701
MP3	0515-2109	1	SCREW-MACH 10-24 .625-IN-LG PAN-HD-SLT	28480	0515-2109
MP4	1390-0846	2	FASTENER-CAPTIVE SCREW M2.5 X 0.45	28480	1390-0846
MP5	E1300-01202	1	CLAMP STRAIN RELIEF	28480	E1300-01202
MP6	E1400-44104	1	TERMINAL HOUSING-BOTTOM	28480	E1400-44104
MP7	E1400-44105	1	TERMINAL HOUSING-TOP	28480	E1400-44105
			TERMINAL MODULE PARTS (FIG 4-4)		
A1	E1413-66510	1	TERMINAL CARD ASSEMBLY	28480	E1413-66510
JM1	1251-6001	1	CONNECTOR POST TP 2 X 3P	28480	1251-6001
P1-P2	1252-1593	2	CONNECTOR-RA RCPT, 96P	28480	1252-1593
TB1-TB2	0360-2391	4	TERMINAL BLOCK 12 POS	28480	0360-2391
TB3-TB5	0360-2501	6	TERMINAL BLOCK 10 POS	28480	0360-2501
TB6-TB11	0360-2502	6	TERMINAL BLOCK 8 POS	28480	0360-2502
TB12-TB13	0360-2391		TERMINAL BLOCK 12 POS	28480	0360-2391
TB14-TB16	0360-2501		TERMINAL BLOCK 10 POS	28480	0360-2501

a Includes J4100, J4110, J4220, J4230, J4340, J4350, J4460, and J4470

b Includes J4101, J4111, J4221, J4231, J4341, J4351, J4461, and J4471

c Includes K4100-K4115, K4190-K4192, K4216-K4231, K4332-K4347, and K4448-K4463

Table 4-3. HP E1413A Scanning A/D Reference Designators

Reference Designators		
A ..... assembly	J .....electrical connector (jack)	S ..... switch (rotary)
CBL ..... cable	JM .....jumper	SCR ..... screw
F ..... fuse	MP ..... misc. mech part	SHD ..... shield
HD .....misc hardware	P ..... electrical conn (plug)	SP ..... switch (push-button)
	PNL ..... panel	TP ..... test connector

Table 4-4. HP E1413A Scanning A/D Code List of Manufacturers

Mfr Code	Manufacturer Name	Manufacturer Address			Zip Code
00779	AMP INC	HARRISBURG	PA	US	17111
05791	LYN-TRON INC	BURBANK	CA	US	91505
26742	METHODE ELECTRONICS INC	CHICAGO	IL	US	60656
28480	HEWLETT-PACKARD CO - CORPORATE	PALO ALTO	CA	US	94304
30817	INSTRUMENT SPECIALTIES CO INC	DEL WATER GAP	PA	US	18327
75915	LITTELFUSE INC	DES PLAINES	IL	US	60016
81073	GRAYHILL INC	LA GRANGE	IL	US	60525
83486	ELCO INDUSTRIES INC	ROCKFORD	IL	US	61125
91662	ELCO CORP	NEWPORT BEACH	CA	US	92660

Component Locators

Figures 4-1 through 4-4 show locations of selected replaceable parts for the E1413A Scanning A/D. Note that there are no replaceable parts for the Signal Conditioning Plug-Ons (SCPs).

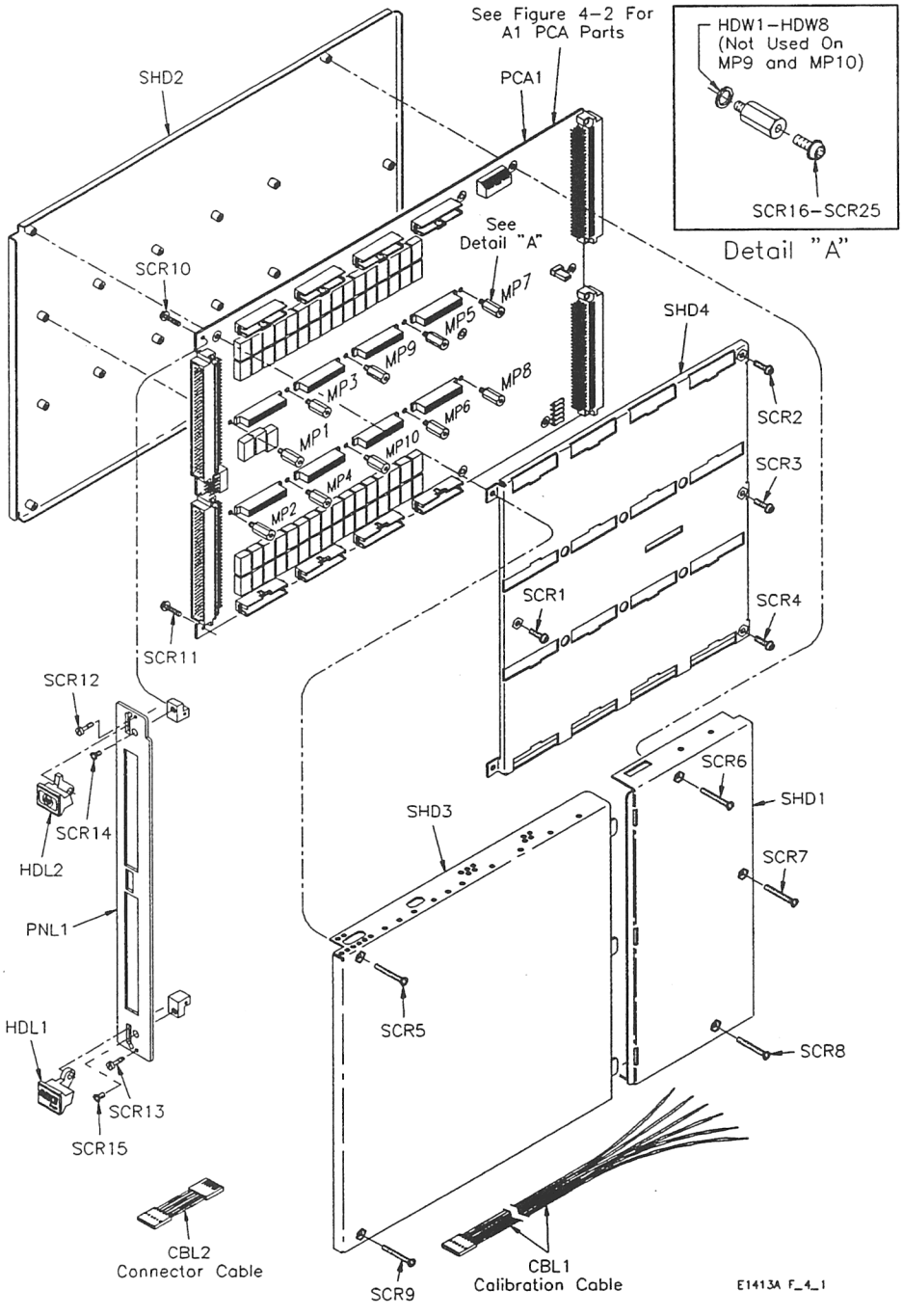

Figure 4-1. HP E1413A Mechanical Parts

A1 PCA Relay Number Legend

Ch	Relay	Ch	Relay	Ch	Relay	Ch	Relay	Ch	Relay	Ch	Relay
0	K4100	11	K4111	22	K4222	33	K4333	44	K4344	55	K4455
1	K4101	12	K4112	23	K4223	34	K4334	45	K4345	56	K4456
2	K4102	13	K4113	24	K4224	35	K4335	46	K4346	57	K4457
3	K4103	14	K4114	25	K4225	36	K4336	47	K4347	58	K4458
4	K4104	15	K4115	26	K4226	37	K4337	48	K4448	59	K4459
5	K4105	16	K4216	27	K4227	38	K4338	49	K4449	60	K4460
6	K4106	17	K4217	28	K4228	39	K4339	50	K4450	61	K4461
7	K4107	18	K4218	29	K4229	40	K4340	51	K4451	62	K4462
8	K4108	19	K4219	30	K4230	41	K4341	52	K4452	63	K4463
9	K4109	20	K4220	31	K4231	42	K4342	53	K4453	90	K4190
10	K4110	21	K4221	32	K4332	43	K4343	54	K4454	91	K4191
										92	K4192

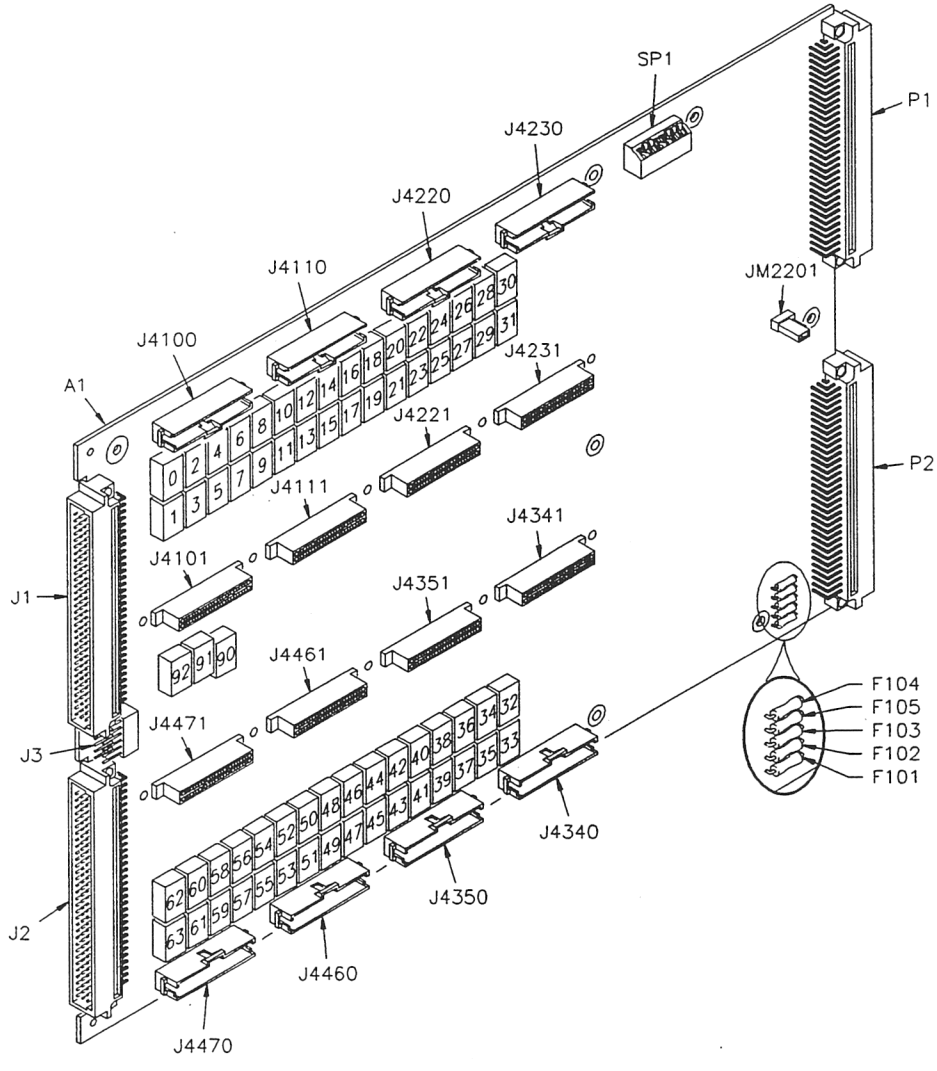

Figure 4-2. HP E1413A A1 PCA Replaceable Parts

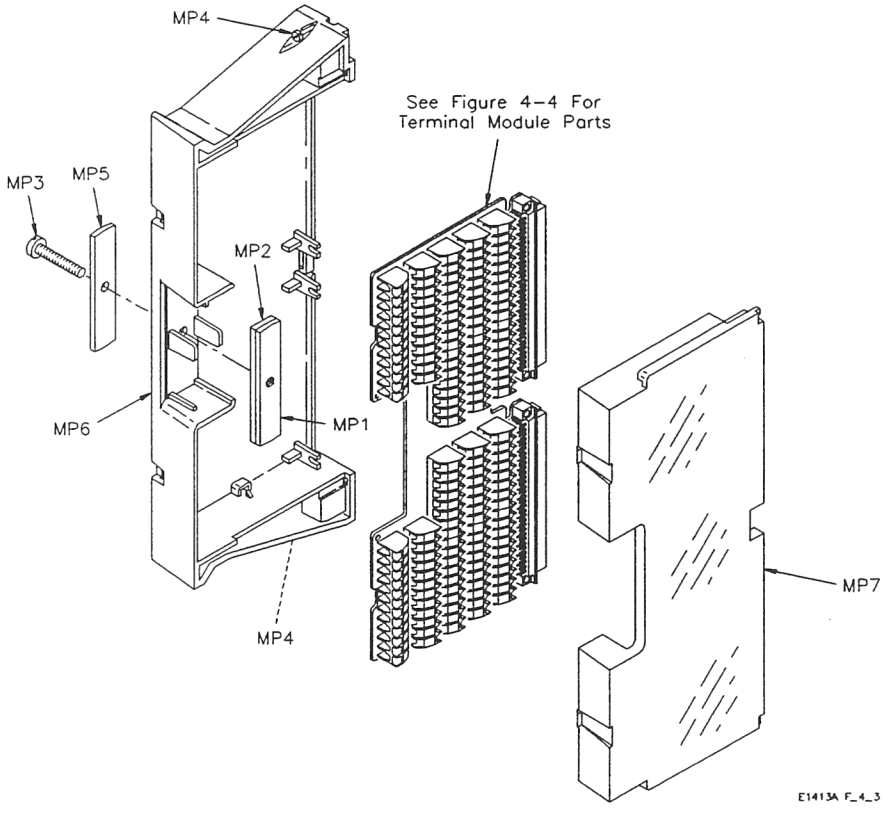

Figure 4-3. HP E1413A Terminal Case Parts

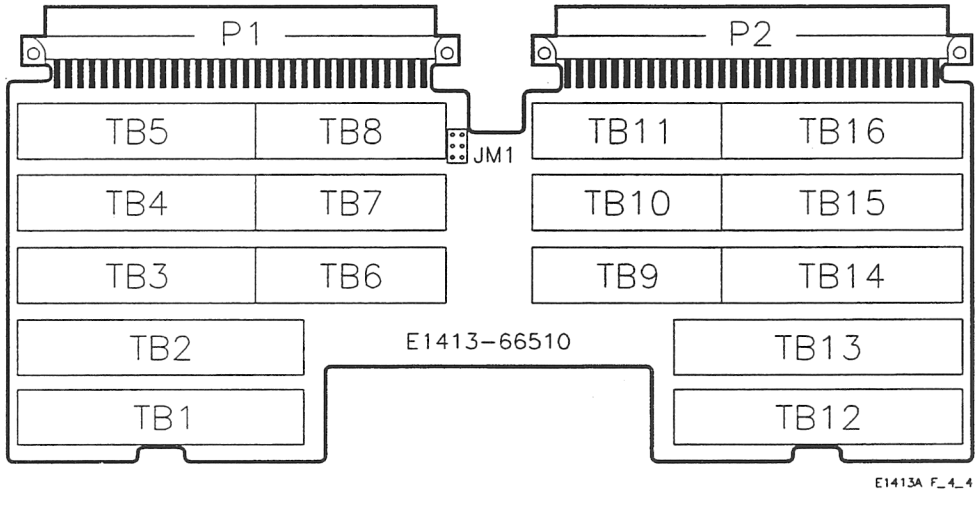

Figure 4-4. HP E1413A Terminal Module Parts

5
Service

Introduction

This chapter contains information to service the HP E1413A 64-Channel Scanning A/D Converter, including recommended repair strategy, troubleshooting guidelines, and disassembly/repair guidelines.

WARNING

Do not perform any of the service procedures shown unless you are a qualified, service-trained person, and have read the WARNINGS and CAUTIONS in Chapter 1.

Equipment Required

Equipment required for HP E1413A Scanning A/D troubleshooting and repair is listed in Table 1-1, *Recommended Test Equipment*. To avoid damage to the screw head slots, use T8 and T10 Torx drivers as described in the "Disassembly" section in this chapter.

Service Aids

See *Chapter 4 - Replaceable Parts* for descriptions and locations of HP E1413A replaceable parts. Service notes and service literature for the Scanning A/D may be available through Hewlett-Packard. For information, contact your nearest Hewlett-Packard Sales and Support Office.

Recommended Repair Strategy

The recommended repair strategy for the HP E1413A Scanning A/D and associated SCPs is assembly-level repair.

- Before replacing an HP E1413A Scanning A/D, check fuses F101 through F105 on the A1 Printed Circuit Assembly (PCA) and check other replaceable parts listed in Table 4-2.
- If the fault can be traced to a part listed in Table 4-2, repair the fault and retest the instrument. If not, exchange or replace the entire HP E1413A. (There are no replaceable parts for SCPs.)
- See "Shipping Guidelines" in *Chapter 1 - General Information* to return an HP E1413A Scanning A/D to Hewlett-Packard.

Troubleshooting Guidelines

This section shows suggested steps to troubleshoot HP E1413A Scanning A/D faults to a replaceable part listed in Table 4-2. If the fault cannot be isolated to a replaceable part in Table 4-2, do not attempt further repairs. Instead, replace the instrument. The first step in troubleshooting the Scanning A/D is to run the service test (SERVTEST) program.

Running Service Test Program

To begin troubleshooting, you can run the following program to test the Scanning A/D. (The self-test may take several minutes to complete.) If the self-test passes, "Self-test (*TST?) PASSED" is displayed. If the self-test fails, error messages are displayed. Table 5-1 shows suggested actions, depending on the program results.

NOTE

*During the first 5 minutes after power is applied, the self-test (*TST?) may fail. Allow the Scanning A/D to warm up before running the SERVTEST program.*

Table 5-1. Scanning A/D Troubleshooting Steps

If the SERVTEST program result is:	The most likely cause is:	See this section:
No return	Mechanical part failure	"Checking Mechanical Parts"
+3052, "Self test failed. Check info in FIFO"	SCP is not properly seated or is defective	"Checking SCPs"

For example, the following result for the SERVTEST program indicates test #72 (SCP continuity) failed and channel 100 is the failed channel. See *Appendix C - Command Reference* for a description of the *TST? and SYST:ERR? error messages.

System Error Messages

```
+3052,"Self test failed. Test info in FIFO"
+0,"No error"
```

FIFO Error Messages

```
  1 -  99  = Failed test number
100 - 163 = Failed channel number
200 - 204 = Range for failed test

+7.200000E+001,+1.000000E+002
```

```
10!  RE-STORE "SERVTEST"
20   !
30   ASSIGN @Ad TO 70903
40   !
50   !———————— Self-Test (*TST?) ————————
60   !
70   OUTPUT @Ad;"*TST?"
80   PRINT "Performing Self-Test (Takes about 2 minutes) ..."
90   ENTER @Ad;Tst_res
100  IF Tst_res<>0 THEN GOTO Syst_err
110  PRINT "Self-Test (*TST?) PASSED"
120  GOTO End_test
130  !
140  !———————— Error Messages ————————
150  !
160 Syst_err:  !
170  CLEAR SCREEN
180  PRINT "System Error Messages"
190  PRINT
200  DIM Err_msg$[256]
210  REPEAT
220    OUTPUT @Ad;"SYST:ERR?"
230    ENTER @Ad;Err_msg$
240    PRINT Err_msg$
250  UNTIL Err_msg$="+0,""No error"""
260  !
270  !———————— Check FIFO Error Messages ————————
280  !
290 Fifo_err:  !
300  PRINT
310  PRINT "FIFO Error Messages"
320  PRINT
330  PRINT "     1 -  99 = Failed test number"
340  PRINT "100 - 163 = Failed channel number"
350  PRINT "200 - 204 = Range for failed channel"
360  PRINT
370  DIM Err$[1000]
380  OUTPUT @Ad;"DATA:FIFO:COUN?"
390  ENTER @Ad;Fifo_count
400  OUTPUT @Ad;"DATA:FIFO:PART? ";Fifo_count
410  ENTER @Ad;Err$
420  PRINT Err$
430 End_test: !
440  END
```

Checking Mechanical Parts

If the self-test service (SERVTEST) program does not respond, remove the Scanning A/D from the mainframe and check the mechanical parts listed in Table 5-2 (see Figures 4-1 through 4-4 for component locations).

Change/repair/replace components as required and then retest the instrument using the SERVTEST program. If the SERVTEST still does not return a response, replace the instrument. See "Repair Guidelines" before removing or installing any Scanning A/D components.

Table 5-2. Scanning A/D Mechanical Checks

Test/Check	Reference Designator	Check	Comments
Heat Damage	- - - - - - - -	Discolored PC board Damaged insulation Evidence of arcing	If there is damage, do not operate the instrument until you have corrected the problem.
Logical Address	SP1	LADDR setting (factory set to 24)	See the *HP E1413A User's Manual* for information on switch settings.
A1 PCA	F101 - F105 J1 - J3, J1203, J4100 - J4471 P1 - P2	Fuse continuity Damaged connectors	See "Repair/Maintenance Guidelines" before replacing fuse(s)/connectors. See "Disassembly" to remove covers/shields.
Terminal Module	JM1 MP1 - MP7 P1 - P2 TB1 - TB16	Damaged connectors	See Figures 4-3 and 4-4 for terminal module parts locations.

Checking SCPs

If there are no apparent mechanical problems but the instrument does not pass the service test (SERVTEST) program, check all installed SCPs. Table 5-3 gives some guidelines to check/replace SCPs.

Table 5-3. Guidelines to Check/Replace SCPs

If the SERVTEST shows failure for test number(s):	Do This:
20 or 30 through 37	Remove all SCPs and rerun the SERVTEST program. If *TST? then passes, replace SCPs one at a time until you find the one causing the problem. Then, replace the SCP causing the problem.
72 or 74 through 76	Try to reseat the SCP that the channel number(s) point to and then rerun SERVTEST. Or, move the SCP and see if the problems follow the SCP. If so, replace the SCP and rerun SERVTEST.
Other test numbers	Replace the instrument.

Disassembly

To perform Scanning A/D disassembly, you will need a T-8 and T-10 Torx driver. See Figure 5-1 for steps to disassemble a Scanning A/D. Reverse the steps to reassemble the Scanning A/D.

CAUTION

Do not handle or disassemble the Scanning A/D module unless you are familiar with the precautions listed in the "Repair/Maintenance Guidelines" section of this chapter.

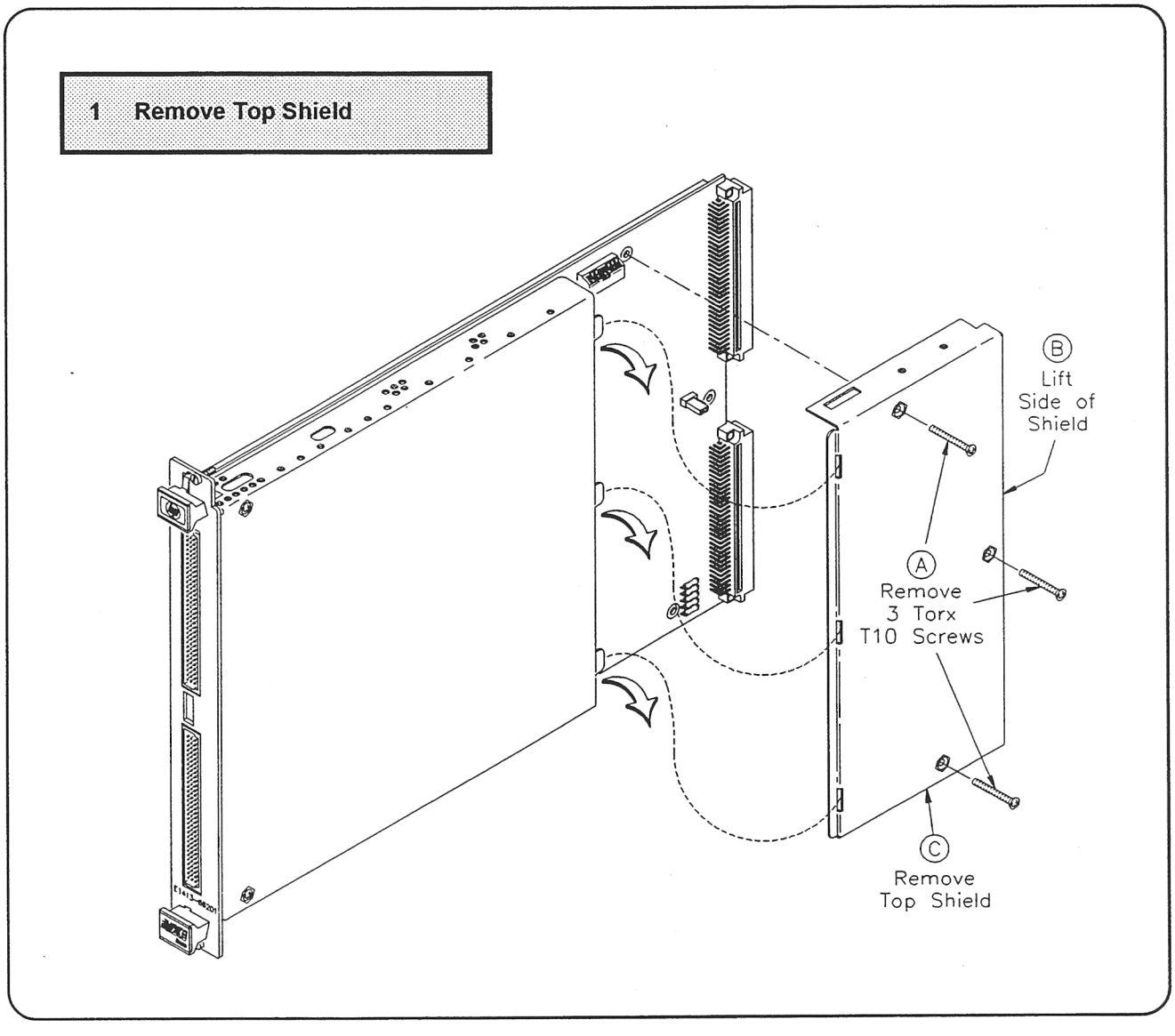

Figure 5-1. Scanning A/D Disassembly

2 Remove SCP Cover

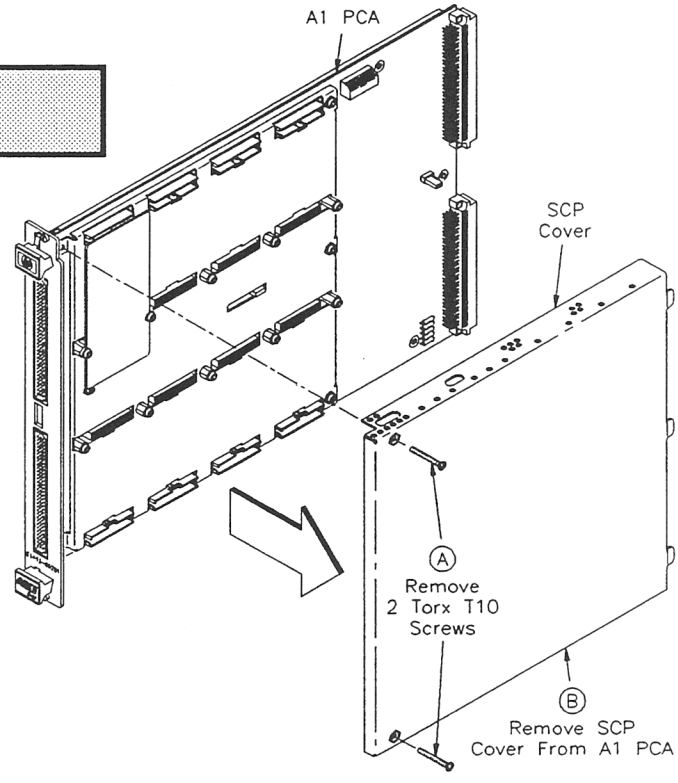

3 Remove SCP(s)

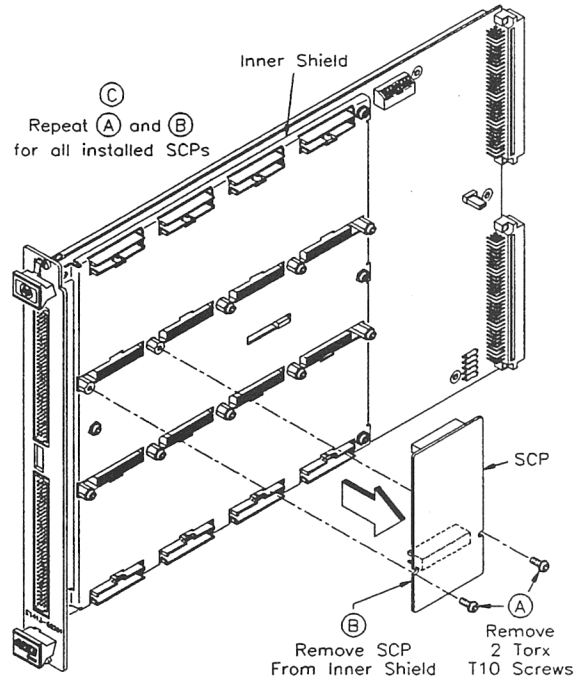

Figure 5-1. Scanning A/D Disassembly (Cont'd)

4 Remove Inner Shield

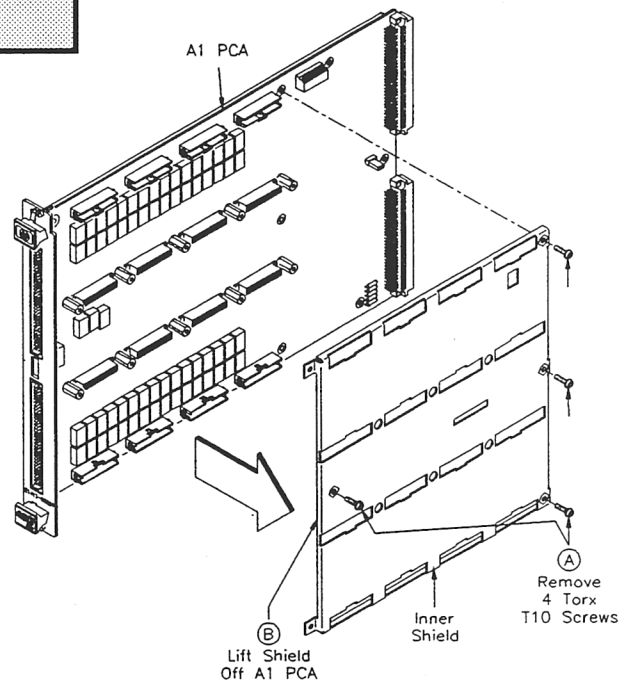

5 Remove A1 PCA

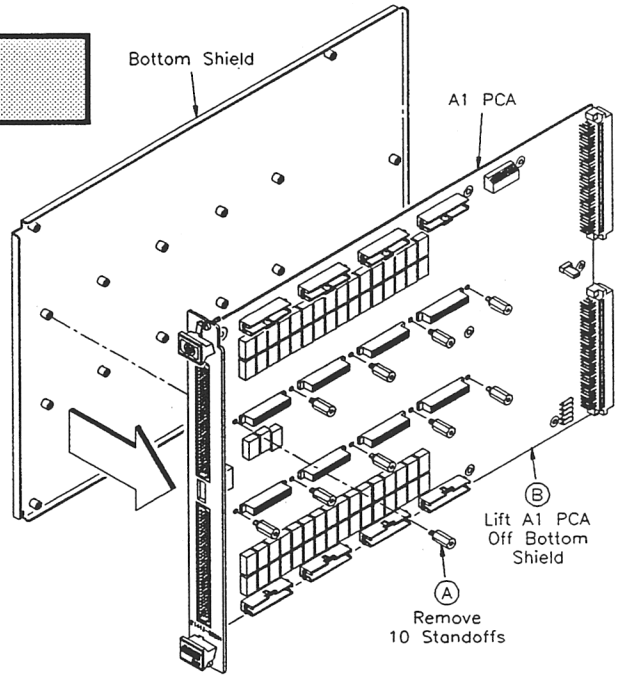

Figure 5-1. Scanning A/D Disassembly (cont'd)

Repair/ Maintenance Guidelines

Guidelines to repair and maintain an HP E1413A Scanning A/D follow, including:

- ESD precautions
- Soldering printed circuit boards
- Post-repair safety checks

CAUTION

Do not touch the Scanning A/D or SCP edge connector pins at any time unless you are actively using a static-free workstation.

ESD Precautions

Electrostatic discharge (ESD) may damage CMOS and other static-sensitive devices in the Scanning A/D such as ROM or RAM ICs. This damage can range from slight parameter degradation to catastrophic failure. When working on Scanning A/D or SCP modules, follow these guidelines to avoid damaging components:

- Always use a static-free work station with a pad of conductive rubber or similar material when handling module components.
- After you remove a module from the frame, place the module on a conductive surface to guard against ESD damage.
- Do not use pliers to remove a CMOS device from a high-grip socket. Instead, use a small screwdriver to pry the device up from one end. Slowly lift the device up, one pair of pins at a time.
- After you remove a CMOS device from a module, place the device onto a pad of conductive foam or other suitable holding material.
- If a device requires soldering, be sure the device is placed on a pad of conductive material. Also, be sure you, the pad, and the soldering iron tip are grounded to the device. Apply as little heat as possible when soldering.

Soldering Printed Circuit Boards

The etched circuit boards on Scanning A/D module printed circuit assemblies (PCAs) have plated-through holes that allow a solder path to both sides of the insulating material. Soldering can be done from either side of the board with equally good results. When soldering to any circuit board, keep in mind the following guidelines:

CAUTION

Do not use a sharp metal object such as an awl or twist drill, since sharp objects may damage the plated-through conductor.

- Avoid unnecessary component unsoldering and soldering. Excessive replacement can result in damage to the circuit board and/or adjacent components.
- Do not use a high power soldering iron on etched circuit boards, as excessive heat may lift a conductor or damage the board.
- Use a suction device or wooden toothpick to remove solder from component mounting holes. When using a suction device, be sure the equipment is properly grounded to prevent electrostatic discharge from damaging CMOS devices.

Post-Repair Safety Checks

After making repairs to Scanning A/D module components, inspect the device for any signs of abnormal internally generated heat, such as discolored printed circuit boards or components, damaged insulation, or evidence of arcing. Determine and correct the cause of the condition. Then, run the power-on self-test to verify that the Scanning A/D module is operational.

NOTE

As desired, you may want to run the functional and/or performance verification tests in Chapter 2 - Verification Tests.

A
Calculating Scanning A/D Accuracy

Introduction

This appendix shows how scanning A/D accuracy, source equipment measurement uncertainty, and test accuracy ratio (TAR) values are defined and calculated for the performance verification tests for the HP E1413A Scanning A/D.

See Table 2-1, " *HP E1413A Performance Test Record* " for 1-year specification values of Scanning A/D accuracy, 90-day specification values for the Datron 4708 measurement uncertainty, and test accuracy ratios (TARs).

NOTE

Scanning A/D accuracy, measurement uncertainty, and test accuracy ratios in Table 2-1 are valid ONLY for the specified test conditions and assumptions described in this manual.

Scanning A/D Accuracy Definition

Scanning A/D accuracy is the expected accuracy of the measurement due ONLY to the Scanning A/D. The "Minimum" entry in Table 2-1 is the lower value of Scanning A/D accuracy, while the "Maximum" entry is the upper value of Scanning A/D accuracy. If a measured reading is between the Minimum and Maximum values in Table 2-1, the test passes for this input.

Measurement Uncertainty Definition

Measurement Uncertainty is the expected accuracy of the source used to input signals to the multimeter. Since the Datron 4708 Autocal Multifunction Standard Option 10 is the source used for inputs, the measurement uncertainty is that of the Datron 4708.

Test Accuracy Ratio (TAR) Definition

Test Accuracy Ratio (TAR) for the HP E1413A is defined by:

$$\text{TAR} = \frac{\text{Maximum Value} - \text{Expected Reading}}{\text{Measurement Uncertainty}}$$

where maximum value = largest amount of variation from the expected reading (the input), and measurement uncertainty is that of the test equipment (Datron Standard). If a TAR exceeds 10:1, the entry in Table 2-1 is ">10:1".

Scanning A/D Accuracy Calculations

For HP E1413A Scanning A/D performance verification tests, accuracy is defined for DC Voltage measurements using the 1-year specifications in the *HP E1413A User's Manual.* The assumed test conditions are:

- 1 year since the last adjustment
- Operating temperature 23°C ± 1°C
- At least one hour warmup time

DC Voltage Accuracy Equations

From the *HP E1413A User's Manual*, DC voltage accuracy (1-year) = ± (0.02% of reading + offset error + noise). Tables A-1 through A-5 list DCV accuracy equations for the ranges used in the performance verification tests.

Table A-1. Scanning A/D - DCV Accuracy (Option 11 SCP, 1-year)

Range ± FS	Linearity % of rdg	Offset error	Noise 3 sigma	Total offset
.0625 V	± .02%	5.3 µV	8 µV	± [.02% + 13.3 µV]
.25 V	± .02%	10.3 µV	24 µV	± [.02% + 34.3 µV]
1.0 V	± .02%	31 µV	90 µV	± [.02% + 121 µV]
4.0 V	± .02%	122 µV	366 µV	± [.02% + 488 µV]
16.0 V	± .02%	488 µV	1500 µV	± [.02% + 1988 µV]

Test Conditions:

23°C ± 1°C with *CAL? done after a one-hour warmup, A/D Zero done within 5 minutes before the measurement, autoranging OFF, and A/D Filter ON.
Temperature coefficients: (0-40°C) 0.14 µV/°C, (40-55°C) 0.8 µV +0.27 µV/°C.

Table A-2. Scanning A/D - DCV Accuracy (Option 12 SCP, 1-year)

Range ± FS	Linearity % of rdg	Offset error	Noise 3 sigma	Total offset
.0625 V	± .02%	7.2 µV	15 µV	± [.02% + 22.2 µV]
.25 V	± .02%	12.2 µV	28 µV	± [.02% + 40.2 µV]
1.0 V	± .02%	33 µV	92 µV	± [.02% + 125 µV]
4.0 V	± .02%	122 µV	366 µV	± [.02% + 488 µV]
16.0 V	± .02%	488 µV	1500 µV	± [.02% + 1988 µV]

Test Conditions:

23°C ± 1°C with *CAL? done after a one-hour warmup, A/D Zero done within 5 minutes before the measurement, autoranging OFF, and A/D Filter ON.
Temperature coefficients: Gain - 10ppm/°C after *CAL?. Offset (0-30°C) no additional error, (30-40°C) 0.14 µV/°C, (40-55°C) 2.4 µV +0.27 µV/°C.

Table A-3. Scanning A/D - DCV Accuracy (Option 13 SCP Gain X1, 1-year)

Range ± FS	Linearity % of rdg	Offset Error 2 Hz	10 Hz	100 Hz	Filter OFF	Noise 3 sigma
.0625 V	± .02%	13 µV	9.5 µV	6.8 µV	6.3 µV	26 µV
.25 V	± .02%	15 µV	12.5 µV	11.2 µV	10.8 µV	31 µV
1.0 V	± .02%	33 µV	31.8 µV	31.3 µV	31.2 µV	93 µV
4.0 V	± .02%	123 µV	122 µV	122 µV	122 µV	366 µV
16.0 V	± .02%	488 µV	488 µV	488 µV	488 µV	1500 µV

Test Conditions:

23°C ± 1°C with *CAL? done after a one-hour warmup, A/D Zero done within 5 minutes before the measurement, autoranging OFF, and A/D Filter ON. Temperature coefficients: Gain - 15 ppm/°C after *CAL?. Offset - Add tempco + fixed offset to offset above.

Temp	Tempco	2 Hz	10 Hz	100 Hz	Filt OFF
0-30°C	0.16 µV/°C	0 µV	0 µV	0 µV	0 µV
30-40°C	0.18 µV/°C	13 µV	9 µV	1.1 µV	0.2 µV
40-55°C	0.39 µV/°C	31 µV	22 µV	6.4 µV	1.1 µV

Table A-4. Scanning A/D - DCV Accuracy (Option 13 SCP Gain X8, 1-year)

Range ± FS	Linearity % of rdg	Offset Error 2 Hz	10 Hz	100 Hz	Filter OFF	Noise 3 sigma
.0078 V	± .02%	4.6 µV	4.2 µV	3.8 µV	3.7 µV	4.9 µV
.031 V	± .02%	4.8 µV	4.6 µV	4.4 µV	4.3 µV	5.9 µV*
.125 V	± .02%	6 µV	5.3 µV	5 µV	4.9 µV	12 µV
.5 V	± .02%	16 µV	16 µV	16 µV	16 µV	46 µV
2 V	± .02%	61µV	61 µV	61 µV	61 µV	188 µV

Test Conditions:

23°C ± 1°C with *CAL? done after a one-hour warmup, A/D Zero done within 5 minutes before the measurement, autoranging OFF, and A/D Filter ON. Temperature coefficients: Gain - 15 ppm/°C after *CAL?. Offset - Add tempco + fixed offset to offset above.

* = 6.3 µV when temperature ≥ 40°C.

Temp	Tempco	2 Hz	10 Hz	100 Hz	Filt OFF
0-30°C	0.16 µV/°C	0 µV	0 µV	0 µV	0 µV
30-40°C	0.18 µV/°C	4.3 µV	2.7 µV	1.0 µV	0.2 µV
40-55°C	0.39 µV/°C	13 µV	10 µV	6.2 µV	0.8 µV

Table A-5. Scanning A/D - DCV Accuracy (Option 13 SCP Gain X64, 1-year)

Range ± FS	Linearity % of rdg	Offset Error 2 Hz	10 Hz	100 Hz	Filter OFF	Noise 3 sigma
.0039V	± .02%	2.9 µV	2.3 µV	2.1 µV	2.1 µV	1.3 µV*
.0156V	± .02%	3 µV	2.4 µV	2.2 µV	2.2 µV	1.9 µV**
.0625V	± .02%	3.5 µV	3 µV	2.9 µV	2.9 µV	5.7 µV
.25V	± .02%	8.2 µV	8 µV	8 µV	8 µV	23 µV

Test Conditions:

23°C ± 1°C with *CAL? done after a one-hour warmup, A/D Zero done within 5 minutes before the measurement, autoranging OFF, and A/D Filter ON. Temperature coefficients: Gain - 15 ppm/°C after *CAL?. Offset - Add tempco + fixed offset to offset above.

* = 1.7 µV for 100 Hz filter , ** = 2.2 µV when temperature ≥ 40°C.

Temp	Tempco	2 Hz	10 Hz	100 Hz	Filt OFF
0-30 °C	0.16 µV/°C	0 µV	0 µV	0 µV	0 µV
30-40°C	0.18 µV/°C	1.1µV	0.2 µV	0.1µV	0.1 µV
40-55°C	0.39 µV/°C	6 µV	1.4 µV	0.6 µV	0.6 µV

Example: Calculate DC Voltage Accuracy

From Table A-1, for a 3.2 Vdc input to the scanning A/D using the 4.0 V range, scanning A/D accuracy (1-year) for the Option 11 SCP = ± (.02% of reading + 122 µV offset error +366 µV noise) = ± (.0002 x 3.2 + 122 x 10^{-6} + 366 x 10^{-6}) = ± 0.0011 Vdc. Thus, for a 3.2 Vdc input the Minimum value for the Option 11 SCP test in Table 2-1 = 3.1989 Vdc and the Maximum value = 3.2011 Vdc.

Measurement Uncertainty Calculations

Measurement uncertainties for the Datron 4708 source are calculated using the 90-day accuracy specifications in the *Datron 4708 User's Handbook.* Measurement Uncertainty = Datron Accuracy + Calibration Uncertainty, where Datron Accuracy (ppm) = Accuracy Relative to Calibration Standards = ± (ppm OUTPUT + ppm FS) and FS = 2 x range for all ranges. The assumed test conditions are:

- Temperature of 23°C ± 1°C
- 90 days since calibration
- At least one hour warmup time

Calculate DCV Measurement Uncertainty

From *Section 6 - Specifications* of the *Datron 4708 User's Handbook*, DC Voltage (Option 10) Accuracy follows, where Datron Accuracy = ± (ppm OUTPUT + ppm FS).

Table A-6. Datron 4708 DC Voltage Specifications (Option 10, 90-day)

Datron Range (Volts)	Datron Accuracy (ppm)	Calibration Uncertainty (ppm)	Total Measurement Uncertainty (μV)
100.00000 mV	3 + 0.4 μV	4	± [7.0 * |OUTPUT| + 0.4]
1.0000000 V	2 + 0.4	2	± [4.0 * |OUTPUT| + 0.8]
10.000000 V	1 + 0.15	1.5	± [2.5 * |OUTPUT| + 3.0]
100.00000 V	2 + 0.25	2	± [4.0 * |OUTPUT| + 50.0]

Example: Calculate DC Voltage Measurement Uncertainty

Since Measurement Uncertainty = Datron Accuracy + Calibration Uncertainty, for a 3.2 Vdc OUTPUT and 10.000000 V range Measurement Uncertainty (μV) = ± [(1.0 x 3.2) + (2 x 0.15 x 10) + (1.5 x 3.2)] = ± 11 μV = ± 1.1E-5 V. Or, from Table A-6, Measurement Uncertainty (μV) = ± [(2.5 x 3.2) + 3.0] = ± 11 μV = ± 1.1E-5 V.

Test Accuracy Ratio (TAR) Calculations

For the HP E1413A Scanning A/D, DCV Test Accuracy Ratio (TAR) is:

$$\text{TAR} = \frac{\text{Maximum} - \text{Input}}{\text{MeasurementUncertainty}}$$

where Maximum, Input, and Measurement Uncertainty are all in Vdc.

Example: Calculate DC Voltage Accuracy TAR

For a 3.2 Vdc measurement (Input), the Maximum value = 3.2011 Vdc and the Measurement Uncertainty = 1.1E-5 Vdc, so

$$\text{TAR} = \frac{(3.2011 - 3.2000)}{1.1\text{E}-5} = 100:1$$

Since this value is >10:1, the entry in Table 2-1 is ">10:1".

B
Error Messages

Table B-1. HP E1413A Error Messages

Code	Description	Comments
-108	Parameter not allowed	
-160	Block data error	
-211	Trigger ignored	
-212	Arm ignored	
-213	INIT ignored	
-221	Settings conflict	
-222	Data out of range	
-224	Illegal parameter value	
-240	Hardware error. Execute *TST?	
-253	Corrupt media	
-281	Cannot create program	
-282	Illegal program name	
-310	System error	
-410	Query INTERRUPTED	
2001	Invalid channel number	
2003	Invalid word address	
2007	Bus error	
2008	Scan list not initialized	
2009	Too many channels in channel list	
2016	Byte count is not a multiple of two	
3000	Illegal while initiated	
3001	Illegal while continuous	
3004	Illegal command. CAL:CONF not sent.	Incorrect sequence of calibration commands. Send CAL:CONF command before CAL:VAL command.
3005	Illegal command. Send CAL:VAL:RES.	The only command accepted after a CAL:CONF: RES is a CAL:VAL:RES command.
3006	Illegal command. Send CAL:VAL:VOLT.	The only command accepted after a CAL:CONF:VOLT is a CAL:VAL:VOLT command.
3007	Invalid signal conditioning module	The command sent to an SCP was illegal for its type.
3008	Too few channels in scan list	A Scan List must have at least two channels.
3012	Trigger too fast	Scan List not completed before another trigger event occurs.
3015	Channel modifier not permitted here	
3019	TRIG:TIM interval too small for SAMP:TIM interval and scan list size	TRIG:TIM interval must allow for completion of entire scan list at currently set SAMP:TIM interval.

Table B-1. HP E1413A Error Messages (cont'd)

Code	Description	Comments
3020	Input overvoltage	Calibration relays opened (if JM2202 not cut) to protect module inputs, and Questionable Data Status bit 11 set. Execute *RST to close relays and/or reset status bit.
3021	FIFO overflow	
3026	Calibration failed	
3027	Unable to map A24 VXI memory	
3028	Incorrect range value.	Range value sent is not supported by instrument.
3030	Command not yet implemented!!.	
3032	0x1: DSP-Unrecognized command code	
3033	0x2: DSP-Parameter out of range.	
3034	0x4: DSP-Flash ROM erase failure	
3035	0x8: DSP-Programming voltage not present	
3036	0x10: DSP-Invalid SCP gain value	Check that SCP is seated or replace SCP. Channel numbers are in FIFO.
3037	0x20: DSP-Invalid *CAL? constant or checksum. *CAL? required.	
3038	0x40: DSP- Could not cal some channels	Check that SCP is seated or replace SCP. Channel numbers are in FIFO.
3039	0x80: DSP-Re-Zero of ADC failed.	
3040	0x100: DSP-Invalid Tare CAL constant or checksum.	Perform CAL:TARE - CAL:TARE? procedure.
3041	0x200: DSP-Invalid Factory CAL constant or checksum.	Perform A/D Cal procedure.
3042	0x400: DSP-DAC adjustment went to limit.	Execute *TST?
3043	0x800: DSP Status–Do *CAL?	
3044	0x1000: DSP-Overvoltage on input	
3045	0x2000: DSP-reserved error condition	
3046	0x4000: DSP-ADC hardware failure	
3047	0x8000: DSP-reserved error condition	
3048	Calibration or Test in Process	
3049	Calibration not in Process	

Table B-1. HP E1413A Error Messages (cont'd)

Code	Description	Comments
3050	ZERO must be sent before FSCale	Perform A/D Cal sequence as shown in CAL:CONF:VOLT
3051	Memory size must be multiple of 4.	From MEM:VME:SIZE. Each HP E1413 reading requires 4 bytes.
3052	Self test failed. Test info in FIFO.	A value of 1 through 99 is a failed test number. A value of 100 through 163 is a channel number for the failed test. A value of 200 through 204 is an A/D range number for the failed test where 200 =.0625V, 201 =.25V, 202 = 1V, 203 = 4V, and 204 = 16V range. For example, if DATA:FIFO? returns the values 72 and 108, this indicates that test number 72 failed on channel 8. Test numbers 20, 30-37, 72, 74-76 may indicate a problem with a Signal Conditioning Plug-on. For tests 20 and 30-37, remove all SCPs and see if *TST? passes. If so, replace SCPs one at a time until you find the one causing the problem. For tests 72, and 74-76, try to re-seat the SCP that the channel number(s) points to, or move the SCP and see if the failure(s) follow the SCP. If the problems move with the SCP, replace the SCP. Refer to the *TST? command for a list of module functions tested. NOTE During the first 5 minutes after power is applied, *TST? may fail. Allow the module to warm up before executing *TST?.
3053	Corrupt on board Flash memory	
3056	Custom EU not loaded	May have erased custom EU conversion table with *RST. May have linked channel with standard EU after loading custom EU, this erases the custom EU for this channel. Reload custom EU table using DIAG:CUST:LIN or DIAG:CUST:PIEC.

C
Command Reference

Introduction

This appendix describes the Standard Commands for Programmable Instruments (SCPI) CALibration commands and IEEE-488.2 Common Commands for the HP E1413A. Commands are listed alphabetically within each subsystem. See *Chapter 5 - Command Reference* in the *HP E1413 User's Manual* for command fundamentals.

CALibration Commands

The CALibration subsystem commands provide two major categories of calibration: A/D Calibration and Working Calibration.

A/D Calibration

For this procedure, an external multimeter is used to determine the actual voltage and resistance values of the Scanning A/D's internal calibration sources. The known values are then sent to the Scanning A/D where they are stored and used to perform internal A/D calibration.

A/D calibration requires a series of CALibration commands (**CAL:CONF..., CAL:VAL..., and CAL:STORE ADC**). See *Chapter 3 - Adjustments* for the procedure. Always execute ***CAL? or a CAL:TARE** operation after A/D calibration.

Working Calibration

As shown in Figure C-1, there are three levels of HP E1413A "working calibration": A/D Zero, Channel Calibration, and Channel Tare.

A/D Zero (CAL:ZERO?): This function quickly compensates for any short term A/D converter offset drift (the autozero function in a conventional voltmeter).

Channel Calibration (*CAL? or CAL:SETup): This function corrects for offset and gain errors, thermal offsets, and component drift for each channel out to the input side of the SCP.

Channel Tare (CAL:TARE): This function corrects for voltage offsets in external (user) system wiring. The user places a short across the transducer wiring and the voltage that the Scanning A/D measures is now considered the new "zero" value for that channel. The new offset can be stored in non-volatile calibration memory (with **CAL:STOR TARE**) but is in effect whether stored or not. **CAL:TARE** automatically executes a ***CAL?** command.

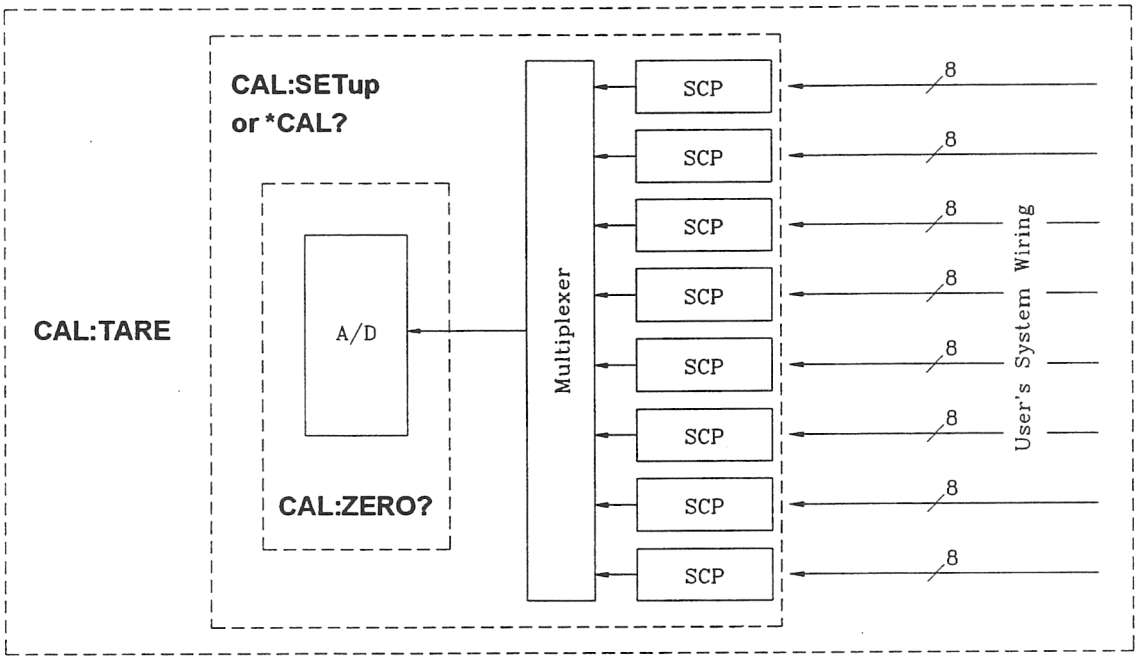

Figure C-1. HP E1413A Working Calibration Levels

CALibration Command Syntax

```
CALibration
    :CONFigure
        :RESistance
        :VOLTage <range>, ZERO | FS
    :SETup
    :SETup?
    :STORe ADC | TARE
    :TARE (@<ch_list>)
        :RESet
    :TARE?
    :VALue
        :RESistance <ref_ohms>
        :VOLTage <ref_volts>
    :ZERO?
```

CALibration: CONFigure: RESistance

CALibration:CONFigure:RESistance connects the on-board reference resistor to the Calibration Bus. A four-wire measurement of the resistor can be made with an external multimeter connected to the **HCAL, LCAL, HOHM,** and **LOHM** terminals on the terminal module or to the **VH, VL, Ω H,** and **Ω L** terminals on the Cal Bus connector.

Comments

- **Related Commands:** CAL:VAL:RES, CAL:STOR ADC

Command Sequence

CAL:CONF:RES	*connect reference resistor to Calibration Bus*
*OPC? or SYST:ERR?	*must wait for CAL:CONF:RES to complete*
(now measure ref resistor with external DMM)	
CAL:VAL:RES <measured value>	*Send measured value to module*
CAL:STORE ADC	*Store cal constants in non-volatile memory (used only at end of complete cal sequence)*

CALibration: CONFigure: VOLTage

CALibration:CONFigure:VOLTage <range>,<zero_fs> connects the on-board voltage reference to the Calibration Bus. A measurement of the source voltage can be made with an external multimeter connected to the **HCAL** and **LCAL** terminals on the terminal module or to the **VH** and **VL** terminals on the Cal Bus connector. The *range* parameter controls the voltage level available when the *zero_fs* parameter is FSCale (full scale).

Parameters

Parameter Name	Parameter Type	Range of Values	Default Units
range	numeric (float32)	see comments	volts
zero_fs	discrete (string)	ZERO | FSCale	none

Comments

- The *range* parameter must be within 5% of one of the 5 following values: .0625VDC, .25VDC, 1VDC, 4VDC, 16VDC. Range may be specified in millivolts (mV).
- The FSCALE output voltage of the calibration source should be greater than 90% of the nominal value for each range, except the 16V range where the output is 10V.
- **Related Commands:** CAL:VAL:VOLT, CAL:STOR ADC

Usage

CAL:CONF:VOLT .25, ZERO	*Voltage reference set to .25V range and zero output*
CAL:CONF:VOLT .25, FSCALE	*Set same range but full-scale output*

Command Sequence

CAL:CONF:VOLTAGE .0625, ZERO	*connect voltage reference to Calibration Bus*
*OPC? or SYST:ERR?	*Wait for CAL:CONF: VOLT to complete*
(now measure voltage with external DMM)	
CAL:VAL:VOLT <measured value>	*Send measured value to module*
repeat above sequence for full-scale	
repeat zero and full-scale for remaining ranges (.25, 1, 4, 16)	
CAL:STORE ADC	*Store cal constants in non-volatile memory (used only at end of cal seq)*

CALibration:SETup

CALibration:SETup causes the Channel Calibration function to be performed for every module channel. The Channel Calibration function calibrates the A/D Offset and the Gain/Offset for all 64 channels. This calibration is accomplished using internal calibration references. Since this is time-consuming, you may want to run many at once rather than one at a time.

CAL:SET performs the same operation as the *CAL? command except that since it is not a query command it does not tie up the C-SCPI driver waiting for response data from the instrument. If you have multiple HP E1413s in your system, you can start a CAL:SET operation on each and then execute a CAL:SET? command to complete the operation on each instrument.

- **Related Commands:** CAL:SETup?, *CAL?

Usage

CAL:SET	*start SCP Calibration on 1st HP E1413*
:	*start SCP Calibration on more HP E1413s*
CAL:SET	*start SCP Calibration on last HP E1413*
CAL:SET?	*query for results from 1st HP E1413*
:	*query for results from more HP E1413s*
CAL:SET?	*query for results from last HP E1413*

CALibration:SETup?

CALibration:SETup? returns a value to indicate the success of the last CAL:SETup or *CAL? operation. CAL:SETup? returns the value only after the CAL:SETup operation is complete.

Comments

- **Returned Value:**

Value	Meaning	Further Action
0	Cal OK	None
-1	Cal Error	Query the Error Queue (SYST:ERR?) See Appendix B. Also run *TST?
-2	No results available	No *CAL? or CAL:SETUP done

The C-SCPI type for this returned value is **int16**.

- **Related Commands:** CAL:SETup, *CAL?

Usage

see CAL:SETup

CALibration:STORe

CALibration:STORe <type> stores the most recently measured calibration constants into Flash Memory (Electrically Erasable Programmable Read Only Memory). When *type* = ADC, the module sets its Analog-to-Digital Converter calibration using the most recently measured CAL:VALues for voltage and resistance, and stores these to Flash Memory. When *type* = TARE, the module stores the most recently measured CAL:TARE channel offsets into Flash Memory.

NOTE

The HP E1413's Flash Memory has a finite lifetime of approximately ten thousand write cycles (unlimited read cycles). While executing CAL:STOR once every day would not exceed the lifetime of the Flash Memory for approximately 27 years, an application that stored constants many times each day would unnecessarily shorten the Flash Memory's lifetime. See Comments below.

Parameters

Parameter Name	Parameter Type	Range of Values	Default Units
type	discrete (string)	ADC|TARE	none

Comments

- The Flash Memory Enable jumper (JM 2201) must be set to the enable position before executing this command (See *Chapter 3 - Adjustments*).
- Channel offsets are compensated by the CAL:TARE command even when not stored in the Flash Memory. There is no need to use the CAL:STORE TARE command for channels which are re-calibrated frequently.
- **Related Commands:** CAL:VAL:RES, CAL:VAL:VOLT
- ***RST Condition:** Stored calibration constants are unchanged.

Usage

CAL:STORE ADC	*Store cal constants in non-volatile memory after A/D calibration*
CAL:STORE TARE	*Store channel offsets in non-volatile memory after channel tare*

Command Sequence

Storing A/D cal constants

```
perform complete A/D calibration, then...
CAL:STORE ADC
```

Storing channel tare (offset) values

CAL:TARE <*ch_list*>	*to correct channel offsets*
CAL:STORE TARE	*Optional - depends on long term storage req*

CALibration:TARE

CALibration:TARE (@<ch_list>) measures the voltage present on the channels specified and stores the value in on-board RAM as a calibration constant for those channels. Future measurements made with the channels will be compensated by the amount of the tare value.

Use CAL:TARE to compensate for voltage offsets in transducer wiring. Where tare values need to be retained for long periods, they can be stored in the module's Flash Memory (Electrically Erasable Programmable Read Only Memory) by executing the CAL:STORe TARE command.

NOTE

The HP E1413's Flash Memory has a finite lifetime of approximately ten thousand write cycles (unlimited read cycles). While executing CAL:STOR once every day would not exceed the lifetime of the Flash Memory for approximately 27 years, an application that stored constants many times each day would unnecessarily shorten the Flash Memory's lifetime.

NOTE *If Open Transducer Detect (OTD) is enabled when CAL:TARE is executed, the module will disable OTD, wait 1 minute to allow channels to settle, perform the calibration, and then re-enable OTD. If your program turns off OTD before executing CAL:TARE, it should also wait 1 minute for settling.*

Parameters

Parameter Name	Parameter Type	Range of Values	Default Units
ch_list	channel list (string)	100 - 163	none

Comments

- Channel offsets are compensated by the CAL:TARE command even when not stored in the Flash Memory. There is no need to use the CAL:STORE TARE command for channels which are re-calibrated frequently.
- Set Amplifier/Filter SCP gain before CAL:TARE. For best accuracy, choose the gain that will be used during measurements.
- Executing CAL:TARE sets the Calibrating bit (bit 0) in Operation Status Group. Executing CAL:TARE? resets the bit.
- **Related Commands:** CAL:TARE?, CAL:STOR TARE
- ***RST Condition:** Channel offsets are not affected by *RST.

Command Sequence

CAL:TARE *<ch_list>*	*to correct channel offsets*
CAL:TARE?	*to return the success flag from the CAL:TARE operation*
CAL:STORE TARE	*Optional - depends on long term storage req*

CALibration: TARE:RESet

CALibration:TARE:RESet resets the tare calibration constants to zero for all 64 channels. Executing CAL:TARE:RES affects the tare cal constants in RAM only. To reset the tare cal constants in Flash Memory, execute CAL:TARE:RES and then execute CAL:STORE TARE.

Command Sequence

CAL:TARE:RESET	*to reset channel offsets*
CAL:STORE TARE	*Optional if necessary to reset tare cal constants in Flash Memory.*

CALibration:TARE?

CALibration:TARE? Returns a value to indicate the success of the last CAL:TARE operation. CAL:TARE? returns the value only after the CAL:TARE operation is complete.

- **Returned Value:**

Value	Meaning	Further Action
0	Cal OK	None
-1	Cal Error	Query the Error Queue (SYST:ERR?) See Error Messages in *Appendix B - Error Messages*. Also run *TST?
-2	No results available	No CAL:TARE done

The C-SCPI type for this returned value is **int16**.

- Executing CAL:TARE sets the Calibrating bit (bit 0) in Operation Status Group. Executing CAL:TARE? resets the bit.
- **Related Commands:** CAL:STOR TARE

Command Sequence

CAL:TARE <*ch_list*>	*to correct channel offsets*
CAL:TARE?	*to return the success flag from the CAL:TARE operation*
CAL:STORE TARE	*Optional depending on necessity of long term storage*

CALibration: VALue:RESistance

CALibration:VALue:RESistance <ref_ohms> sends the value of the on-board reference resistor to the module for A/D calibration.

Parameters

Parameter Name	Parameter Type	Range of Values	Default Units
ref_ohms	numeric (float 32)	5%	ohms

Comments

- *ref_ohms* must be within 5% of the nominal resistor value and may be specified in Kohm.

- A four-wire measurement of the resistor can be made with an external multimeter connected to the **HCAL, LCAL, HOHM,** and **LOHM** terminals on the terminal module or to the **VH, VL, Ω H,** and **Ω L** terminals on the Cal Bus connector.
- Use the CAL:CONF:RES command to configure the reference resistor for measurement at the Calibration Bus connector.
- **Related Commands:** CAL:CONF:RES, CAL:STORE ADC

Usage

```
CAL:VALUE:RESISTANCE <measured value>
```

Command Sequence

```
CAL:CONF:RES
(now measure ref resistor with external DMM)
CAL:VAL:RES <measured value>          Send measured value to module
```

CALibration: VALue:VOLTage

CALibration:VALue:VOLTage <ref_volts> sends the value of the DC reference source to the module for A/D calibration.

Parameters

Parameter Name	Parameter Type	Range of Values	Default Units
ref_volts	numeric (float 32)	must be within 10% of range nominal	volts

Comments

- *ref_volts* may be specified in millivolts (mV).
- A measurement of the source voltage can be made with an external multimeter connected to the **HCAL** and **LCAL** terminals on the terminal module or to the **VH** and **VL** terminals on the Cal Bus connector.
- Use the CAL:CONF:VOLT command to configure the on-board voltage source for measurement at the Calibration Bus connector.
- The value sent must be for the currently configured range and output (zero or full scale) as set by the previous CAL:CONF:VOLT <*range*>, ZERO | FSCale command.
- **Related Commands:** CAL:CONF:VOLT, CAL:STORE ADC

Usage

```
CAL:VALUE:VOLTAGE <measured value>
```

Command Sequence

```
CAL:CONF:VOLTAGE 4,FSCALE
*OPC?                                  Wait for operation to complete

ENTER statement

(now measure voltage with external DMM)

CAL:VAL:VOLT <measured value>          Send measured value to module
```

CALibration:ZERO?

CALibration:ZERO? corrects Analog to Digital converter offset for any drift since the last *CAL? or CAL:ZERO? command was executed.

Comments

- The CAL:ZERO? command only corrects for A/D offset drift (zero). Use the *CAL? common command to perform on-line calibration of channels as well as A/D offset. *CAL? performs gain and offset correction of the A/D and each channel out to the field wiring connector.
- **Returned Value:**

Value	Meaning	Further Action
0	Cal OK	None
-1	Cal Error	Query the Error Queue (SYST:ERR?) See Error Messages in *Appendix B - Error Messages*

The C-SCPI type for this returned value is **int16**.

- Executing this command **does not** alter the module's programmed state (function, range, etc.).
- **Related Commands:** *CAL?
- ***RST Condition:** A/D offset performed

Usage

```
CAL:ZERO?
enter statement here                   returns 0 or -1
```

Common Commands

This section describes IEEE-488.2 Common commands. See *Chapter 5 - HP E1413 Command Reference* in the *HP E1413A User's Manual* for Common Command fundamentals.

*CAL?

Calibration Command. The calibration command causes the Channel Calibration function to be performed for every module channel. The Channel Calibration function includes calibration of A/D Offset, and Gain and Offset for all 64 channels. This calibration is accomplished using internal calibration references.

- **Returned Value:**

Value	Meaning	Further Action
0	Cal OK	None
-1	Cal Error	Query the Error Queue (SYST?ERR?). See Error Messages in *Appendix B - Error Messages*

The C-SCPI type for this returned value is **int16**.

- **Related Commands:** CALibration:SETup, CALibration:SETup?
- Executing this command **does not** alter the module's programmed state (function, range etc.).

NOTE

*If Open Transducer Detect (OTD) is enabled when *CAL? is executed, the module will disable OTD, wait 1 minute to allow channels to settle, perform the calibration, and then re-enable OTD. If your program turns off OTD before executing *CAL?, it should also wait 1 minute for settling.*

---

*CLS

Clear Status Command. The *CLS command clears all status event registers (Standard Event Status Event Register, Standard Operation Status Event Register, Questionable Data Event Register) and the instrument's error queue. This clears the corresponding summary bits (bits 3, 5, & 7) in the Status Byte Register.

*CLS does not affect the enable bits in any of the status register groups. (The SCPI command STATus:PRESet *does* clear the Operation Status Enable and Questionable Data Enable registers.) *CLS disables the Operation Complete function (*OPC command) and the Operation Complete Query function (*OPC? command).

*ESE <mask>

Standard Event Status Enable Register Command. Enables one or more events in the Standard Event Status Register to be reported in bit 5 (the Standard Event Status Summary Bit) of the Status Byte Register. You enable an event by specifying its decimal weight for *<mask>*. To enable more than one event (bit), specify the sum of the decimal weights. The C-SCPI type for *<mask>* is **int16**.

Bit #	7	6	5	4	3	2	1	0
Weighted Value	128	64	32	16	8	4	2	1
Event	Power-On	User Request	Command Error	Execution Error	Device Dependent Error	Query Error	Request Control	Operation Complete

*ESE?

Standard Event Status Enable Query. Returns the weighted sum of all enabled (unmasked) bits in the Standard Event Status Register. The C-SCPI type for this returned value is **int16**.

*ESR?

Standard Event Status Register Query. Returns the weighted sum of all set bits in the Standard Event Status Register. After reading the register, *ESR? clears the register. The events recorded in the Standard Event Status Register are independent of whether or not those events are enabled with the *ESE command to set the Standard Event Summary Bit in the Status Byte Register. The Standard Event bits are described in the *ESE command. The C-SCPI type for this returned value is **int16**.

*IDN?

Identity. Returns the device identity. The response consists of the following four fields (fields are separated by commas):

- Manufacturer
- Model Number
- Serial Number (returns 0 if not available)
- Firmware Revision (returns 0 if not available)

The *IDN? command returns the following command string for the HPE1413:

HEWLETT-PACKARD,E1413,*<serial number>,<revision number>*
The C-SCPI type for this returned value is **string**.

NOTE

The revision will vary with the revision of the firmware installed in the instrument. This is the only indication of which version of the firmware is installed.

---

*OPC

Operation Complete. Causes an instrument to set bit 0 (Operation Complete Message) in the Standard Event Status Register when all pending operations have been completed. By enabling this bit to be reflected in the Status Byte Register (*ESE 1 command), you can ensure synchronization between the instrument and an external computer or between multiple instruments.

NOTE

*Do not use *OPC to determine when the CAL:SETUP or CAL:TARE commands have completed. Instead, use their query forms CAL:SETUP? or CAL:TARE?*

---

*OPC?

Operation Complete Query. Causes an instrument to place a 1 into the instrument's output queue when all pending instrument operations are finished. By requiring your computer to read this response before continuing program execution, you can ensure synchronization between one or more instruments and the computer. The C-SCPI type for this returned value is **int16**.

NOTE

*Do not use *OPC? to determine when the CAL:SETUP or CAL:TARE commands have completed. Instead, use their query forms CAL:SETUP? or CAL:TARE?*

---

*RST

Reset Command. Resets the HPE1413 as follows:

- Sets all four scan lists to their default states:
  - Scan List 1 = ROUT:SEQ:DEF (@100:163)
  - Scan List 2 through 4 are zero length *(undefined)*
  - SENSE:FUNC:VOLT AUTO,(@100:163)
    (all channels DCV, autorange)

- Sets the trigger system as follows:
  - TRIGGER:SOURCE HOLD
  - TRIGGER:TIMER 1E-4
  - TRIGGER:COUNT 1
  - ARM:SOURCE IMMEDIATE

- SAMPLE:TIMER 10E-6
- Aborts all pending operations, returns to Trigger Idle state
- Disables the *OPC and *OPC? modes
- MEMORY:VME:ADDRESS 240000;
  MEMORY:VME:STATE OFF; MEMORY:VME:SIZE 0

*RST does not affect:

- Calibration data
- The output queue
- The Service Request Enable (SRE) register
- The Event Status Enable (ESE) register

*SRE <mask>

Service Request Enable. When a service request event occurs, it sets a corresponding bit in the Status Byte Register (this happens whether or not the event has been enabled (unmasked) by *SRE). The *SRE command allows you to identify which of these events will assert an HP-IB service request (SRQ).

When an event is enabled by *SRE and that event occurs, it sets a bit in the Status Byte Register and issues an SRQ to the computer (sets the HP-IB SRQ line true). You enable an event by specifying its decimal weight for *<mask>*. To enable more than one event, specify the sum of the decimal weights. The C-SCPI type for *<mask>* is **int16**.

Bit #	7	6	5	4	3	2	1	0
Weighted Value	128	64	32	16	8	4	2	1
Event	Operation Status	Request Service	Standard Event	Message Available	Questionable Status	not used	not used	not used

***SRE?** **Status Register Enable Query**. Returns the weighted sum of all enabled (unmasked) events (those enabled to assert SRQ) in the Status Byte Register. The C-SCPI type for this returned value is **int16**.

***STB?** **Status Byte Register Query**. Returns the weighted sum of all set bits in the Status Byte Register. Refer to the *ESE command earlier in this chapter for a table showing the contents of the Status Byte Register. *STB? does not clear bit 6 (Service Request). The Message Available bit (bit 4) may be cleared as a result of reading the response to *STB?. The C-SCPI type for this returned value is **int16**.

***TRG** **Trigger**. Triggers an instrument when the trigger source is set to bus (TRIG:SOUR BUS command) and the instrument is in the Wait for Trigger state.

***TST?** **Self-Test.** Causes an instrument to execute extensive internal self-tests and returns a response showing the results of the self-test.

NOTE *During the first 5 minutes after power is applied, *TST? may fail. Allow the module to warm-up before executing *TST?*

Comments

- **Returned Value:**

The C-SCPI type for this returned value is **int16**.

- Following *TST?, the module is placed in the *RST state.
- *TST? performs the following tests on the HP E1413 and installed Signal Conditioning Plug-ons (SCPs):

DIGITAL TESTS:

Test#	Description
1-3:	Writes and reads patterns to registers via A16 & A24
4-5:	Checks FIFO and CVT
6:	Checks measurement complete (Measuring) status bit
7:	Checks operation of FIFO half and FIFO full IRQ generation
8-9:	Checks trigger operation

ANALOG FRONT END DIGITAL TESTS:

Test#	Description
20:	Checks that SCP ID makes sense
30-32:	Checks relay driver and fet mux interface with EU CPU
33,71:	Checks opening of all relays on power down or input overvoltage
34-37:	Check fet mux interface with A/D digital

ANALOG TESTS:

Test#	Description
40-42:	Checks internal voltage reference
43-44:	Checks zero of A/D, internal cal source and relay drives
45-46:	Checks fine offset calibration DAC
47-48:	Checks coarse offset calibration DAC
49:	Checks internal + and -15V supplies
50-53:	Checks internal calibration source
54-55:	Checks gain calibration DAC
56-57:	Checks that autorange works
58-58:	Checks internal current source
60-63:	Checks front end and A/D noise and A/D filter
64:	Checks zeroing of coarse and fine offset calibration DACs
65-70:	Checks current source and CAL BUS relay and relay drives and OHM relay drive
71:	See 33
72-73:	Checks continuity through SCPs, bank relays and relay drivers
74:	Checks open transducer detect
75:	Checks current leakage of the SCPs
76:	Checks voltage offset of the SCPs

***WAI** **Wait-to-Continue**. Prevents an instrument from executing another command until the operation begun by the previous command is finished (sequential operation).

NOTE *Do not use *WAI to determine when the CAL:SETUP or CAL:TARE commands have completed. Instead, use their query forms CAL:SETUP? or CAL:TARE?. CAL:SETUP? and CAL:TARE? return a value* only after *the CAL:SETUP or CAL:TARE operations are complete.*

SALES & SUPPORT OFFICES
Arranged alphabetically by country

HEADQUARTERS OFFICES
If there is no sales office listed for your area, contact one of these headquarters offices.

NORTH/CENTRAL AFRICA
Hewlett-Packard S.A.
7, rue du Bois-du-Lan
CH-1217 **MEYRIN** 1, Switzerland
Tel: (022) 83 12 12
Telex: 27835 hmea
Cable: HEWPACKSA Geneve

ASIA
Hewlett-Packard Asia Ltd.
47/F, 26 Harbour Rd.,
Wanchai, **HONG KONG**
G.P.O. Box 863, Hong Kong
Tel: 5-8330833
Telex: 76793 HPA HX
Cable: HPASIAL TD

EASTERN EUROPE
Hewlett-Packard Ges.m.b.h.
Lieblgasse 1
P.O.Box 72
A-1222 **VIENNA**, Austria
Tel: (222) 2500-0
Telex: 1 3 4425 HEPA A

NORTHERN EUROPE
Hewlett-Packard S.A.
V. D. Hooplaan 241
P.O.Box 999
NL-1183 AG **AMSTELVEEN**
The Netherlands
Tel: 20 547999
Telex: 18 919 hpner

SOUTH EAST EUROPE
Hewlett-Packard S.A.
World Trade Center
110 Avenue Louis Casai
1215 Cointrin, **GENEVA**, Switzerland
Tel: (022) 98 96 51
Telex: 27225 hpser

EASTERN USA
Hewlett-Packard Co.
4 Choke Cherry Road
ROCKVILLE, MD 20850
Tel: (301) 948-6370

MIDWESTERN USA
Hewlett-Packard Co.
5201 Tollview Drive
ROLLING MEADOWS, IL 60008
Tel: (312) 255-9800

SOUTHERN USA
Hewlett-Packard Co.
2000 South Park Place
ATLANTA, GA 30339
Tel: (404) 955-1500

WESTERN USA
Hewlett-Packard Co.
5161 Lankershim Blvd.
NORTH HOLLYWOOD, CA 91601
Tel: (818) 505-5600

MEDITERRANEAN AND MIDDLE EAST
Hewlett-Packard S.A.
Mediterranean and Middle East Operations
Atrina Centre
32 Kifissias Ave.
Paradissos-Amarousion, **ATHENS**
Greece
Tel: 682 88 11
Telex: 21-6588 HPAT GR
Cable: HEWPACKSA Athens

OTHER INTERNATIONAL AREAS
Hewlett-Packard Co.
Intercontinental Headquarters
3495 Deer Creek Road
PALO ALTO, CA 94304
Tel: (415) 857-1501
Telex: 034-8300
Cable: HEWPACK

ARGENTINA
Hewlett-Packard Argentina S.A.
Montaneses 2140/50
1428 **BUENOS AIRES**
Tel: 781-4059/69
Cable: HEWPACKARG

AUSTRALIA
Hewlett-Packard Australia Ltd.
31-41 Joseph Street
P.O. Box 221
BLACKBURN, Victoria 3130
Tel: 895-2895
Telex: 31-024
Cable: HEWPARD Melbourne

Hewlett-Packard Australia Ltd.
17-23 Talavera Road
P.O. Box 308
NORTH RYDE, N.S.W. 2113
Tel: 888-4444
Telex: 21561
Cable: HEWPARD Sydney

AUSTRIA
Hewlett-Packard Ges.m.b.h.
Lieblgasse 1
P.O. Box 72
A-1222 **VIENNA**
Tel: (0222) 2500-0
Telex: 134425 HEPA A

BELGIUM
Hewlett-Packard Belgium S.A./N.V.
Blvd de la Woluwe, 100
Woluwedal
B-1200 **BRUSSELS**
Tel: (02) 762-32-00
Telex: 23-494 paloben bru

BRAZIL
Hewlett-Packard do Brasil
I.e.C. Ltda.
Alameda Rio Negro, 750
ALPHAVILLE
06400 Barueri SP
Tel: (011) 421.1311
Telex: (011) 33872 HPBR-BR
Cable: HEWPACK Sao Paulo

Hewlett-Packard do Brasil
I.e.C. Ltda.
Praia de Botafago 228
6° Andar-conj 614
Edificio Argentina - Ala A
22250 **RIO DE JANEIRO**, RJ
Tel: (021) 552-6422
Telex: 21905 HPBR-BR
Cable: HEWPACK Rio de Janeiro

CANADA
Hewlett-Packard (Canada) Ltd.
11120-178th Street
EDMONTON, Alberta T5S 1P2
Tel: (403) 486-6666

Hewlett-Packard (Canada) Ltd.
17500 Trans Canada Highway
South Service Road
KIRKLAND, Quebec H9J 2X8
Tel: (514) 697-4232
Telex: 058-21521

Hewlett-Packard (Canada) Ltd.
6877 Goreway Drive
MISSISSAUGA, Ontario L4V 1M8
Tel: (416) 678-9430
Telex: 069-8644

Hewlett-Packard (Canada) Ltd.
2670 Queensview Dr.
OTTAWA, Ontario K2B 8K1
Tel: (613) 820-6483

CHINA, People's Republic of
China Hewlett-Packard Co., Ltd.
P.O. Box 9610, Beijing
4th Floor, 2nd Watch Factory Main Bldg.
Shuang Yu Shou, Bei San Huan Road
Hai Dian District
BEIJING
Tel: 28-0567
Telex: 22601 CTSHP CN
Cable: 1920 Beijing

DENMARK
Hewlett-Packard A/S
Kongevejen 25
DK-3460 **BIRKEROED**
Tel: (02) 81-66-40
Telex: 37409 hpas dk

FINLAND
Hewlett-Packard Oy
Piispankalliontie 17
02200 **ESPOO**
Tel: 00358-0-88721
Telex: 121563 HEWPA SF

FRANCE
Hewlett-Packard France
Chemin des Mouilles
Boite Postale 162
69131 **ECULLY** Cedex (Lyon)
Tel: (78) 133-81-25
Telex: 310617F

Hewlett-Packard France
Parc d'activités du Bois Briard
Avenue du Lac
91040 **EVRY** Cedex
Tel: (60) 77-83-83
Telex: 692315F

Hewlett-Packard France
Zone Industrielle de Courtaboeuf
Avenue des Tropiques
91947 **LES ULIS** Cedex (Orsay)
Tel: (69) 07-78-25
Telex: 600048F

GERMAN FEDERAL REPUBLIC
Hewlett-Packard GmbH
Vertriebszentrum Mitte
Hewlett-Packard-Strasse
D-6380 **BAD HOMBURG**
Tel: (06172) 16-0
Fax: (06172) 16-1309

Hewlett-Packard GmbH
Vertriebszentrun Südwest
Schickardstrasse 2
D-7030 **BÖBLINGEN**
Tel: (07031) 14-0
Fax: (07031) 14-6429

Hewlett-Packard GmbH
Vertriebszentrum Süd
Eschenstrasse 5
D-8028 **TAUFKIRCHEN**
Tel: (089) 61207-0
Fax: (089) 61207-300

GREECE
Hewlett-Packard A.E.
178, Kifissias Avenue
6th Floor
Halandri-**ATHENS**
Greece
Tel: 6471543, 6471673, 6472971
Telex: 221 286 HPHLGR

HONG KONG
Hewlett-Packard Hong Kong, Ltd.
G.P.O. Box 795
5th Floor, Sun Hung Kai Centre
30 Harbour Road
HONG KONG
Tel: 5-8323211
Telex: 66678 HEWPA HX
Cable: HEWPACK HONG KONG

ICELAND
Hewlett-Packard Iceland
Hoefdabakka 9
110 **REYKJAVIK**
Tel: (1) 67 1000

INDIA
Blue Star Ltd.
13 Community Center
New Friends Colony
NEW DELHI 110 065
Tel: 633182, 636674
Telex: 031-61120
Cable: BLUEFROST

INDONESIA
BERCA Indonesia P.T.
P.O.Box 2497/Jkt
Antara Bldg., 11th Floor
Jl. Medan Merdeka Selatan 17
JAKARTA-PUSAT
Tel: 343989
Telex: 46748 BERSAL IA

IRELAND
Hewlett-Packard Ireland Ltd.
82/83 Lower Leeson Street
DUBLIN 2
Tel: 0001 608800
Telex: 30439

ISRAEL
Computation and Measurement Systems (CMS) Ltd.
11 Masad Street
67060
TEL-AVIV
Tel: 388 388
Telex: 33569 Motil IL

ITALY
Hewlett-Packard Italiana S.p.A.
Via G. di Vittorio 9
I-20063 **CERNUSCO SUL NAVIGLIO**
(Milano)
Tel: (02) 923691
Telex: 334632

Hewlett-Packard Italiana S.p.A.
Viale C. Pavese 340
I-00144 **ROMA EUR**
Tel: (06) 54831
Telex: 610514

JAPAN
Yokogawa-Hewlett-Packard Ltd.
Chuo Bldg.,
4-20 Nishinakajima, 5 Chome
Yodogawa-ku
OSAKA, 532
Tel: (06) 304-6021
Telex: YHPOSA 523-3624

Yokogawa-Hewlett-Packard Ltd.
29-21 Takaido-Higashi, 3 Chome
Suginami-ku **TOKYO** 168
Tel: (03) 331-6111
Telex: 232-2024 YHPTOK

Yokogawa-Hewlett-Packard Ltd.
Yasuda Seimei Nishiguchi Bldg.
30-4 Tsuruya-cho, 3 Chome
Kanagawa-ku, **YOKOHAMA** 221
Tel: (045) 312-1252

SALES & SUPPORT OFFICES
Arranged alphabetically by country

KOREA
Samsung Hewlett-Packard Co. Ltd.
Dongbang Yeoeuido Building
12-16th Floors
36-1 Yeoeuido-Dong
Youngdeungpo-Ku
SEOUL
Tel: 784-4666, 784-2666
Telex: 25166 SAMSAN K

MALAYSIA
Hewlett-Packard Sales (Malaysia)
Sdn. Bhd.
9th Floor
Chung Khiaw Bank Building
46, Jalan Raja Laut
50350 **KUALA LUMPUR**
Tel: 2986555
Telex: 31011 HPSM MA

MEXICO
Hewlett-Packard de Mexico,
S.A. de C.V.
Monte Pelvoux No. 111
Lomas de Chapultepec
11000 **MEXICO, D.F.**
Tel: 5-40-62-28, 72-66, 50-25
Telex: 17-74-507 HEWPACK MEX

NETHERLANDS
Hewlett-Packard Nederland B.V.
Startbaan 16
NL-1187 XR **AMSTELVEEN**
P.O. Box 667
NL-1180 AR **AMSTELVEEN**
Tel: (020) 547-6911
Telex: 13 216 HEPA NL

NORWAY
Hewlett-Packard Norge A/S
Osterndalen 16-18
P.O. Box 34
N-1345 **OESTERAAS**
Tel: 0047/2/24 60 90
Telex: 76621 hpnas n

PUERTO RICO
Hewlett-Packard Puerto Rico
101 Muñoz Rivera Av
Esu. Calle Ochoa
HATO REY, Puerto Rico 00918
Tel: (809) 754-7800

SAUDI ARABIA
Modern Electronics Establishment
Hewlett-Packard Division
P.O. Box 1228
Redec Plaza, 6th Floor
JEDDAH
Tel: 644 96 28
Telex: 4027 12 FARNAS SJ
Cable: ELECTA JEDDAH

SINGAPORE
Hewlett-Packard Singapore (Sales) Pte. Ltd.
#08-00 Inchcape House
450-2 Alexandra Road
Alexandra P.O. Box 58
SINGAPORE, 9115
Tel: 4731788
Telex: 34209 HPSGSO RS
Cable: HEWPACK, Singapore

SOUTH AFRICA
Hewlett-Packard So Africa (Pty.) Ltd.
9 Eastern Service Road
Eastgate Ext. 3
SANDTON 2144
Tel: 802-5111, 802-5125
Telex: 4-20877 SA
Cable: HEWPACK Johannesburg

SPAIN
Hewlett-Packard Española, S.A.
Crta. de la Coruña, Km. 16, 400
Las Rozas
E-MADRID
Tel: (1) 637.00.11
Telex: 23515 HPE

SWEDEN
Hewlett-Packard Sverige AB
Skalholtsgatan 9, Kista
Box 19
S-16393 **SPÅNGA**
Tel: (08) 750-2000
Telex: (854) 17886
Telefax: (08) 7527781

SWITZERLAND
Hewlett-Packard (Schweiz) AG
7, rue du Bois-du-Lan
Case postale 365
CH-1217 **MEYRIN** 1
Tel: (0041) 22-83-11-11
Telex:27333 HPAG CH

TAIWAN
Hewlett-Packard Taiwan Ltd.
8th Floor, Hewlett-Packard Building
337 Fu Hsing North Road
TAIPEI
Tel: (02) 712-0404
Telex: 24439 HEWPACK
Cable:HEWPACK Taipei

TURKEY
Teknim Company Ltd.
iran Caddesi No. 7
Karaklidere
ANKARA
Tel: 275800
Telex: 42155 TKNM TR

UNITED KINGDOM
ENGLAND
Hewlett-Packard Ltd.
Heathside Park Road
Cheadle Heath
STOCKPORT
Cheshire
SK3 ORB
Tel: 061-428-0828
Telex: 668068

Hewlett-Packard Ltd.
King Street Lane
Winnersh, **WOKINGHAM**
Berkshire RG11 5AR
Tel: 0734 784774
Telex: 847178

SCOTLAND
Hewlett-Packard Ltd.
SOUTH QUEENSFERRY
West Lothian, EH30 9TG
Tel: 031 331 1188
Telex: 72682

UNITED STATES
Alabama
Hewlett-Packard Co.
420 Wynn Drive
HUNTSVILLE, AL 35805
Tel: (205) 830-2000

Arizona
Hewlett-Packard Co.
8080 Pointe Parkway West
PHOENIX, AZ 85044
Tel: (602) 273-8000

California
Hewlett-Packard Co.
1421 S. Manhattan Av.
FULLERTON, CA 92631
Tel: (714) 999-6700

Hewlett-Packard Co.
5651 West Manchester Ave.
LOS ANGELES, CA 90045
Tel: (213) 337-8000
Telex: 910-325-6608

Hewlett-Packard Co.
9606 Aero Drive
SAN DIEGO, CA 92123
Tel: (619) 279-3200

Hewlett-Packard Co.
3003 Scott Boulevard
SANTA CLARA, CA 95054
Tel: (408) 988-7000
Telex: 910-338-0586

Colorado
Hewlett-Packard Co.
24 Inverness Place, East
ENGLEWOOD, CO 80112
Tel: (303) 649-5000

Connecticut
Hewlett-Packard Co.
47 Barnes Industrial Road South
WALLINGFORD, CT 06492
Tel: (203) 265-7801

Florida
Hewlett-Packard Co.
2901 N.W. 62nd Street
FORT LAUDERDALE, FL 33309
Tel: (305) 973-2600

Hewlett-Packard Co.
6177 Lake Ellenor Drive
ORLANDO, FL 32809
Tel: (305) 859-2900

Georgia
Hewlett-Packard Co.
2000 South Park Place
ATLANTA, GA 30339
Tel: (404) 955-1500
Telex: 810-766-4890

Illinois
Hewlett-Packard Co.
5201 Tollview Drive
ROLLING MEADOWS, IL 60008
Tel: (312) 255-9800
Telex: 910-687-1066

Indiana
Hewlett-Packard Co.
11911 N. Meridian St.
CARMEL, IN 46032
Tel: (317) 844-4100

Louisiana
Hewlett-Packard Co.
160 James Drive East
ST. ROSE, LA 70087
P.O. Box 1449
KENNER, LA 70063
Tel: (504) 467-4100

Maryland
Hewlett-Packard Co.
3701 Koppers Street
BALTIMORE, MD 21227
Tel: (301) 644-5800
Telex: 710-862-1943

Hewlett-Packard Co.
2 Choke Cherry Road
ROCKVILLE, MD 20850
Tel: (301) 948-6370

Massachusetts
Hewlett-Packard Co.
1775 Minuteman Road
ANDOVER, MA 01810
Tel: (617) 682-1500

Michigan
Hewlett-Packard Co.
39550 Orchard Hill Place Drive
NOVI, MI 48050
Tel: (313) 349-9200

Minnesota
Hewlett-Packard Co.
2025 W. Larpenteur Ave.
ST. PAUL, MN 55113
Tel: (612) 644-1100

Missouri
Hewlett-Packard Co.
1001 E. 101st Terrace Suite 120
KANSAS CITY, MO 64131-3368
Tel: (816) 941-0411

Hewlett-Packard Co.
13001 Hollenberg Drive
BRIDGETON, MO 63044
Tel: (314) 344-5100

New Jersey
Hewlett-Packard Co.
120 W. Century Road
PARAMUS, NJ 07653
Tel: (201) 265-5000

New Mexico
Hewlett-Packard Co.
7801 Jefferson N.E.
ALBUQUERQUE, NM 87109
Tel: (505) 823-6100

New York
Hewlett-Packard Co.
9600 Main Street
CLARENCE, NY 14031
Tel: (716) 759-8621

Hewlett-Packard Co.
7641 Henry Clay Blvd.
LIVERPOOL, NY 13088
Tel: (315) 451-1820

Hewlett-Packard Co.
3 Crossways Park West
WOODBURY, NY 11797
Tel: (516) 682-7800

North Carolina
Hewlett-Packard Co.
5605 Roanne Way
GREENSBORO, NC 27420
Tel: (919) 852-1800

Ohio
Hewlett-Packard Co.
15885 Sprague Road
CLEVELAND, OH 44136
Tel: (216) 243-7300

Hewlett-Packard Co.
9080 Springboro Pike
MIAMISBURG, OH 45342
Tel: (513) 433-2223

Hewlett-Packard Co.
675 Brooksedge Blvd.
WESTERVILLE, OH 43081
Tel: (614) 891-3344

Oklahoma
Hewlett-Packard Co.
3525 N.W. 56th St.
Suite C-100
OKLAHOMA CITY, OK 73112
Tel: (405) 946-9499

Oregon
Hewlett-Packard Co.
9255 S. W. Pioneer Court
WILSONVILLE, OR 97070
Tel: (503) 682-8000

Pennsylvania
Hewlett-Packard Co.
111 Zeta Drive
PITTSBURGH, PA 15238
Tel: (412) 782-0400

Hewlett-Packard Co.
2750 Monroe Boulevard
VALLEY FORGE, PA 19482
Tel: (215) 666-9000

Texas
Hewlett-Packard Co.
1826-P Kramer Lane
AUSTIN, TX 78758
Tel: (512) 835-6771

Hewlett-Packard Co.
10535 Harwin Drive
HOUSTON, TX 77036
Tel: (713) 776-6400

Hewlett-Packard Co.
930 E. Campbell Rd.
RICHARDSON, TX 75081
Tel: (214) 231-6101

Hewlett-Packard Co.
1020 Central Parkway South
SAN ANTONIO, TX 78232
Tel: (512) 494-9336

Utah
Hewlett-Packard Co.
3530 W. 2100 South St.
SALT LAKE CITY, UT 84119
Tel: (801) 974-1700

Virginia
Hewlett-Packard Co.
4305 Cox Road
GLEN ALLEN, VA 23060
Tel: (804) 747-7750

Washington
Hewlett-Packard Co.
15815 S.E. 37th Street
BELLEVUE, WA 98006
Tel: (206) 643-4000

Wisconsin
Hewlett-Packard Co.
275 N. Corporate Dr.
BROOKFIELD, WI 53005
Tel: (414) 794-8800

VENEZUELA
Hewlett-Packard de Venezuela C.A.
3A Transversal Los Ruices Norte
Edificio Segre 2 & 3
Apartado 50933
CARACAS 1050
Tel: (582) 239-4133
Telex: 251046 HEWPACK

YUGOSLAVIA
Do Hermes
General Zdanova 4
YU-11000 **BEOGRAD**
Tel: (011) 342 641
Telex: 11433