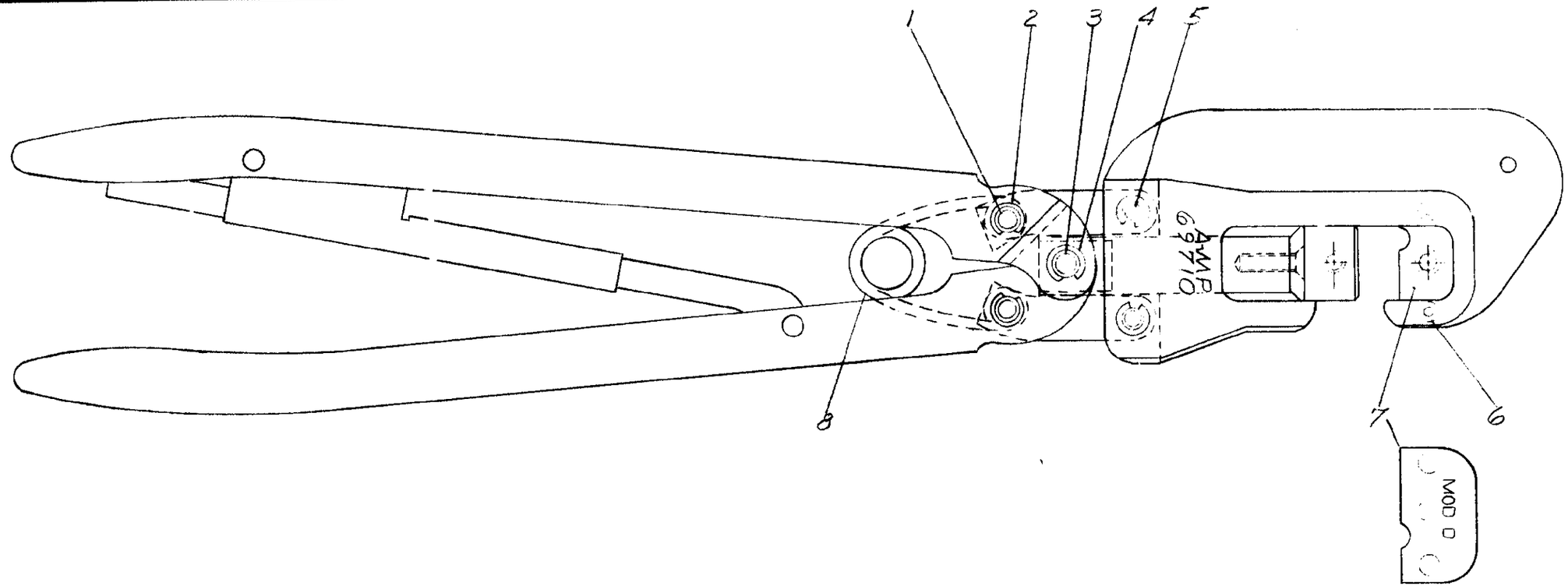

SUPERSEDED BY I.S. 2095

1	2-304668-9	SPRING	8
1	304400-5	PLATE DIE HOLDER	7
2	1-21002-6	SCREW	6
2	305340	PIN - RETAINING	5
2	21045-6	RING - RETAINING	4
1	300389	PIN - RETAINING	3
8	21045-3	RING - RETAINING	2
2	300388	PIN - RETAINING	1
	NUMBER	NAME	REMARKS	ITEM NO

For replacement of parts other than listed, Tool should be returned to our Factory to insure proper Certi-Crimp adjustment.

LTR	REVISION RECORD	DR	CHK	DATE
D1	SUP. By I.S. 2095	BJF	BJF	5-16-73

NUMBER 69710

REQUIRED PER ASSEMBLY

DESCRIP.

©1969 BY AMP INCORPORATED. ALL RIGHTS RESERVED.
AMP PRODUCTS COVERED BY PATENTS AND/OR PATENTS PENDING.

CUSTOMER COPY REFERENCE ONLY

DR B. Skonfeld 10-22-69
CHK E. Fink 10-22-69
DE
REL E. Fink 10-22-69

MATERIAL AND FINISH —
WIRE — RANGE — INSULATION — — —
TOLERANCE EXCEPT AS NOTED ± .015 ± 1° 0'
SCALE 1-1

AMP INCORPORATED HARRISBURG, PENNA.
CLASS —
TYPE —
LOC M B NO 69710 REV D1
NAME HAND TOOL ASSEMBLY - MOD-D

DIMENSIONS IN INCHES. DO NOT SCALE PRINT.
PRINT DIST B
AMP 1250 REV 7/66