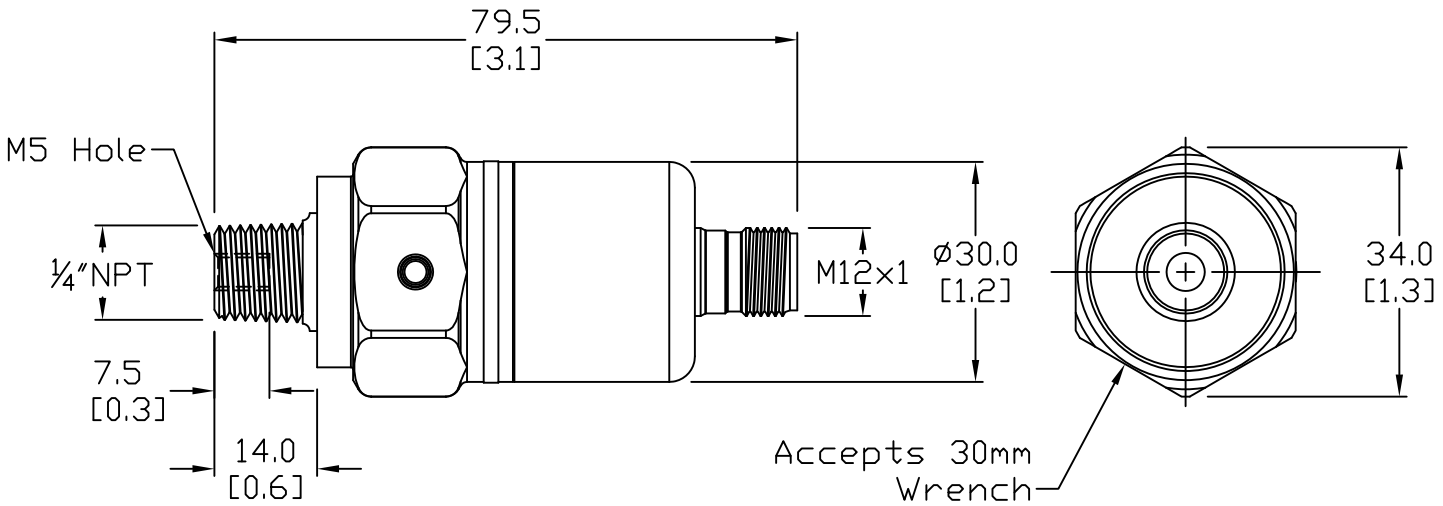

PTD25-10-0015H

Units: inches [mm]

Scale: Full

PRESSURE TRANSMITTER,
30PSI, 0-10V 4-PIN M12 PLUG,
1/4 IN NPT MALE PORT

AUTOMATIONDIRECT.com