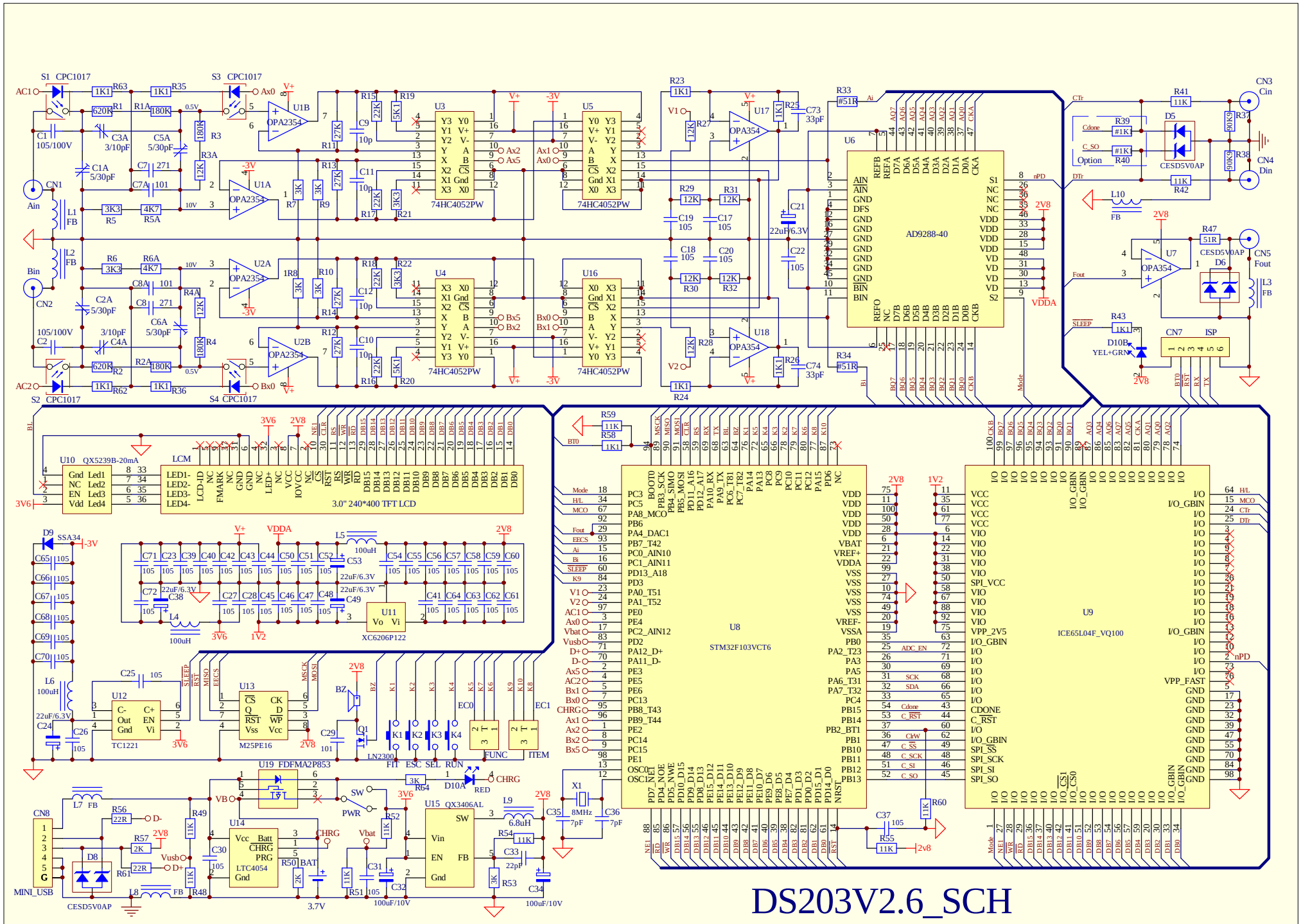
S1 CPC1017
S2 CPC1017
S3 CPC1017
S4 CPC1017
AC1
AC2
Ain
Bin
CN1
CN2
CN3 Cin
CN4 Din
CN5 Fout
CN7 ISP
CN8 MINI_USB
U1A OPA2354
U1B OPA2354
U2A OPA2354
U2B OPA2354
U3 74HC4052PW
U4 74HC4052PW
U5 74HC4052PW
U16 74HC4052PW
U17 OPA354
U18 OPA354
U6 AD9288-40
U7 OPA354
U8 STM32F103VCT6
U9 ICE65L04F_VQ100
U10 QX5239B-20mA
LCM
3.0" 240*400 TFT LCD
U11 XC6206P122
U12 TC1221
U13 M25PE16
U14 LTC4054
U15 QX3406AL
U19 FDFMA2P853
D10A RED
D10B YEL+GRN
CESD5V0AP
LN2300
X1 8MHz
FIT ESC SEL RUN
FUNC ITEM
DS203V2.6_SCH