THIS DRAWING, INFORMATION AND DESIGN ARE THE PROPERTY OF THE NOOK INDUSTRIES, INC. AND CANNOT NOT BE REPRODUCED OR USED IN ANY WAY DETRIMENTAL TO THE INTERESTS OF THE COMPANY. IT IS LOANED FOR THE SPECIFIC PURPOSE INTENDED AND MUST BE RETURNED TO THE COMPANY ON REQUEST UNLESS WRITTEN PERMISSION IS OBTAINED FOR RETENTION.

DWG. NO.

REVISIONS

REV.	ECN. NO.	DESCRIPTION	DATE	REV. BY	APP. BY
A		Added the overload coils.	6-19-09	RL.	

NOTES:

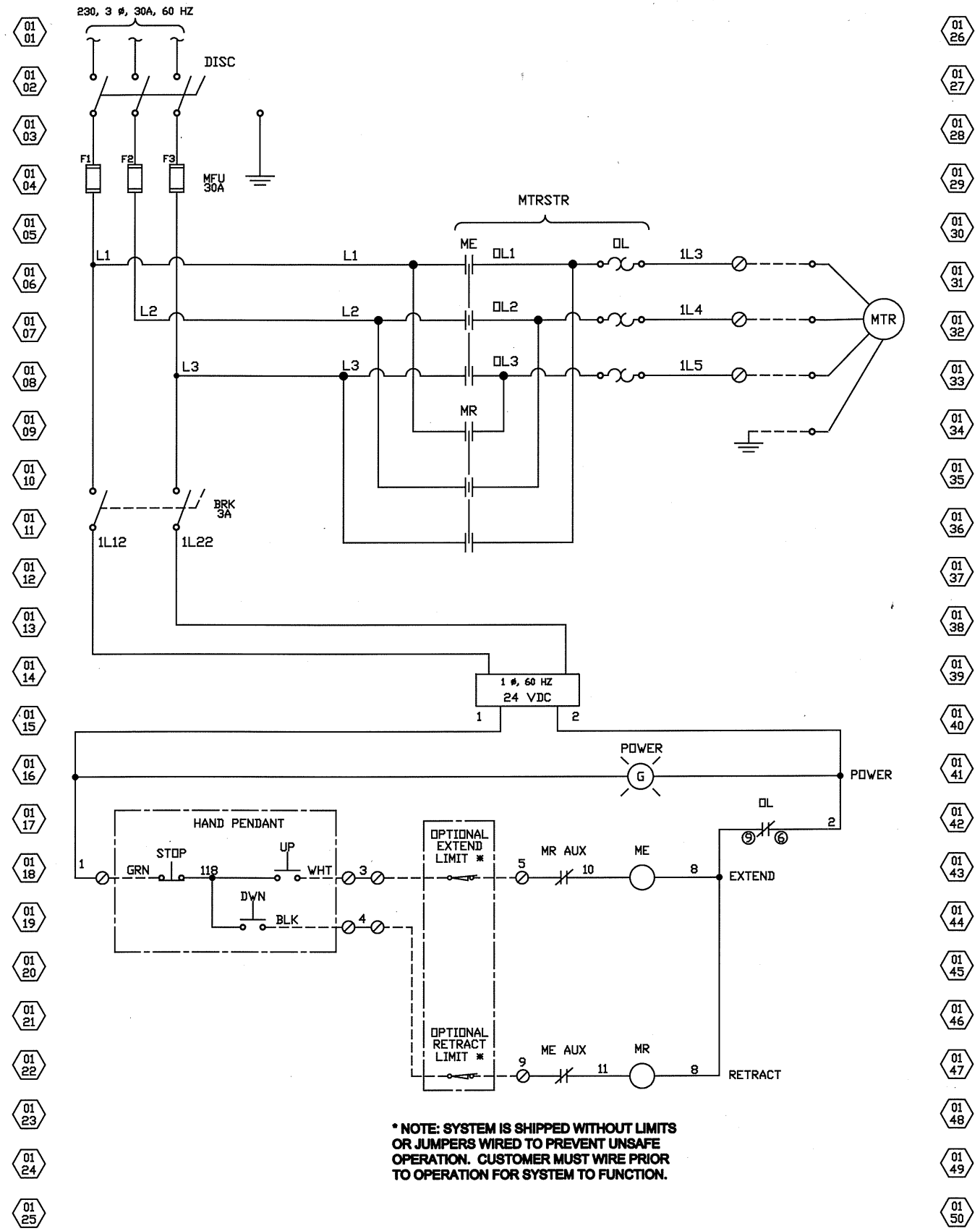

*** NOTE: SYSTEM IS SHIPPED WITHOUT LIMITS OR JUMPERS WIRED TO PREVENT UNSAFE OPERATION. CUSTOMER MUST WIRE PRIOR TO OPERATION FOR SYSTEM TO FUNCTION.**

UNLESS OTHERWISE SPECIFIED

Nook Industries INC. is not responsible for damage or injury resulting from the incorrect use of this drawing.

This drawing is the proprty of Nook Industries INC. and cannot be reproduced without the expressed written consent of Nook Industries INC.

CUSTOMER/VENDOR INFO

DRAWN BY	R LOLLO	12/4/15
CHECKER		
APPROVED		
MATERIAL		
FINISH		
WEIGHT:		
SCALE:	NTS	
SHEET:	1 OF 1	

NOOK
Nook IND. PAG
4950 East 49th St.
Cleveland, Ohio 44125-1016
216-271-7900
WWW.nookindustries.com

DESC.
230VAC 3 ⊘ W/PEN, Dis.

CAGE CODE 57855

DWG. NO. 496821-CB

REV.

DESIGN :

ANSI C