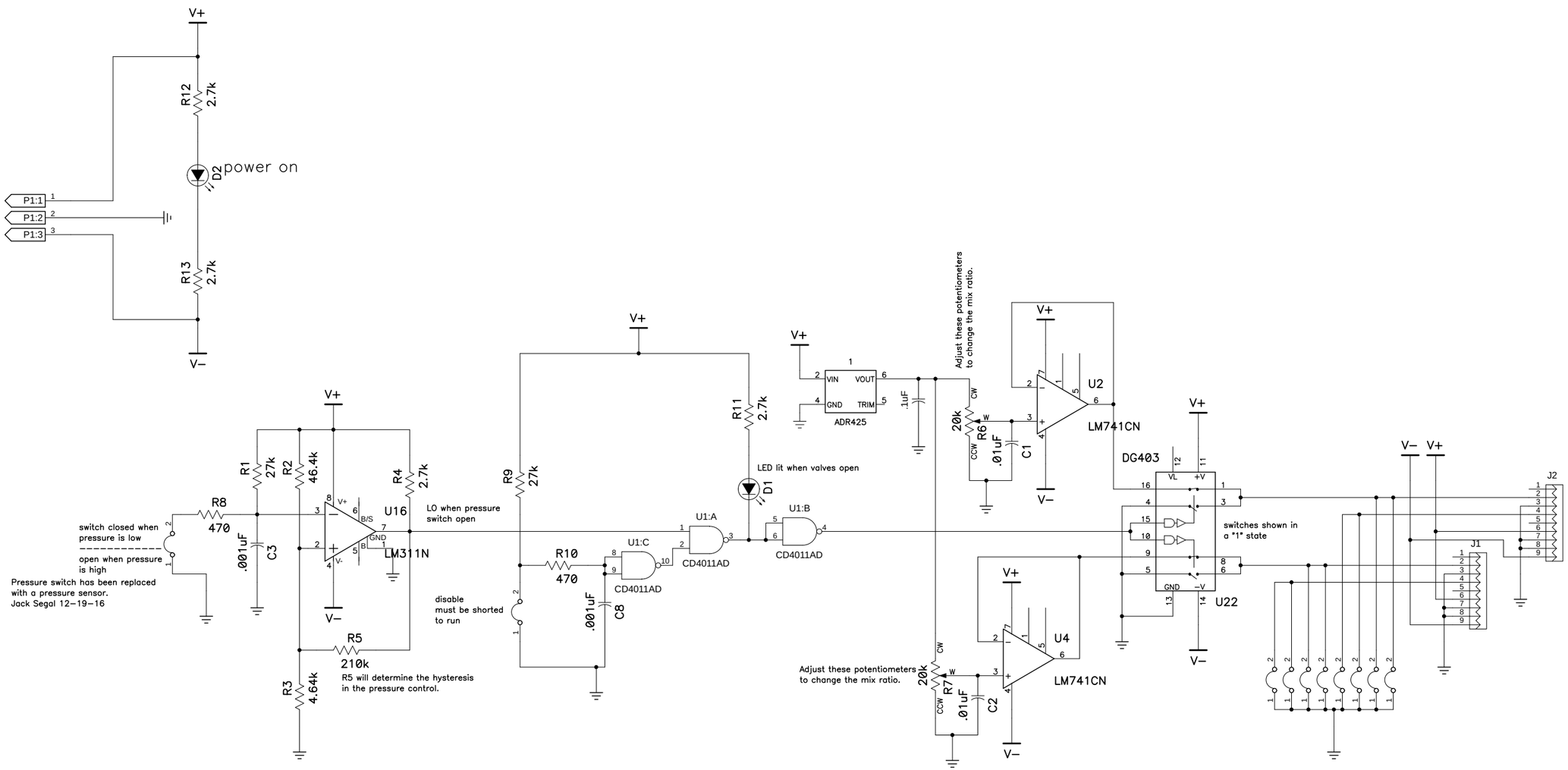

Title	Gas Mixer Control	
Size C	Number	Rev 2.2
Date April 27, 2003	Drawn by John Segal	
Filename mixer_control_2_2.SCH	Sheet 1 of 1	