REVISIONS			
REV	DESCRIPTION	DATE	APPROVAL
A	RELEASE PER ECO 94-0434	8-26-94	93.MJ/Mev

NOTES:

1. ALL RESISTOR VALUES ARE IN OHMS.
2. UNLESS OTHERWISE SPECIFIED:
   A. ALL RESISTORS ARE 1/4 WATT, 5%.
   B. ALL CAPACITOR VALUES ARE SHOWN IN MICROFARADS

	SIGNATURES	DATE
DRAWN:	D. O'TOOLE	3/5/93
PROJ. ENG:	M. SPANGLER	8/27/93
ENG. MGR:	D. MELROSE	8/27/93
PRODUCTION:	Larry Thomas	8/28/94
I.A.:	Scott Adams	8/29/94

THIS DRAWING AND SPECIFICATION HEREON, ARE THE PROPERTY OF VMIC AND SHALL NOT BE REPRODUCED OR COPIED OR USED IN WHOLE OR IN PART AS A BASIS FOR THE MANUFACTURE OR SALE OF ITEMS WITHOUT WRITTEN PERMISSION.

VMIC® Huntsville, Alabama 35803-3308
VME Microsystems International Corporation

TITLE: VMIVME - 4140 SCHEMATIC

SIZE	FORM NO.	DWG NO.
B	0BPH5	141-004140-000
SCALE: NONE		SHEET 1

SIZE B | DWG NO. 141-004140-000 | SHT. 1 | REV. A

SCHEMATIC NAME: pcse SHEET NUMBER: 1 DATE: Aug 11, 1994

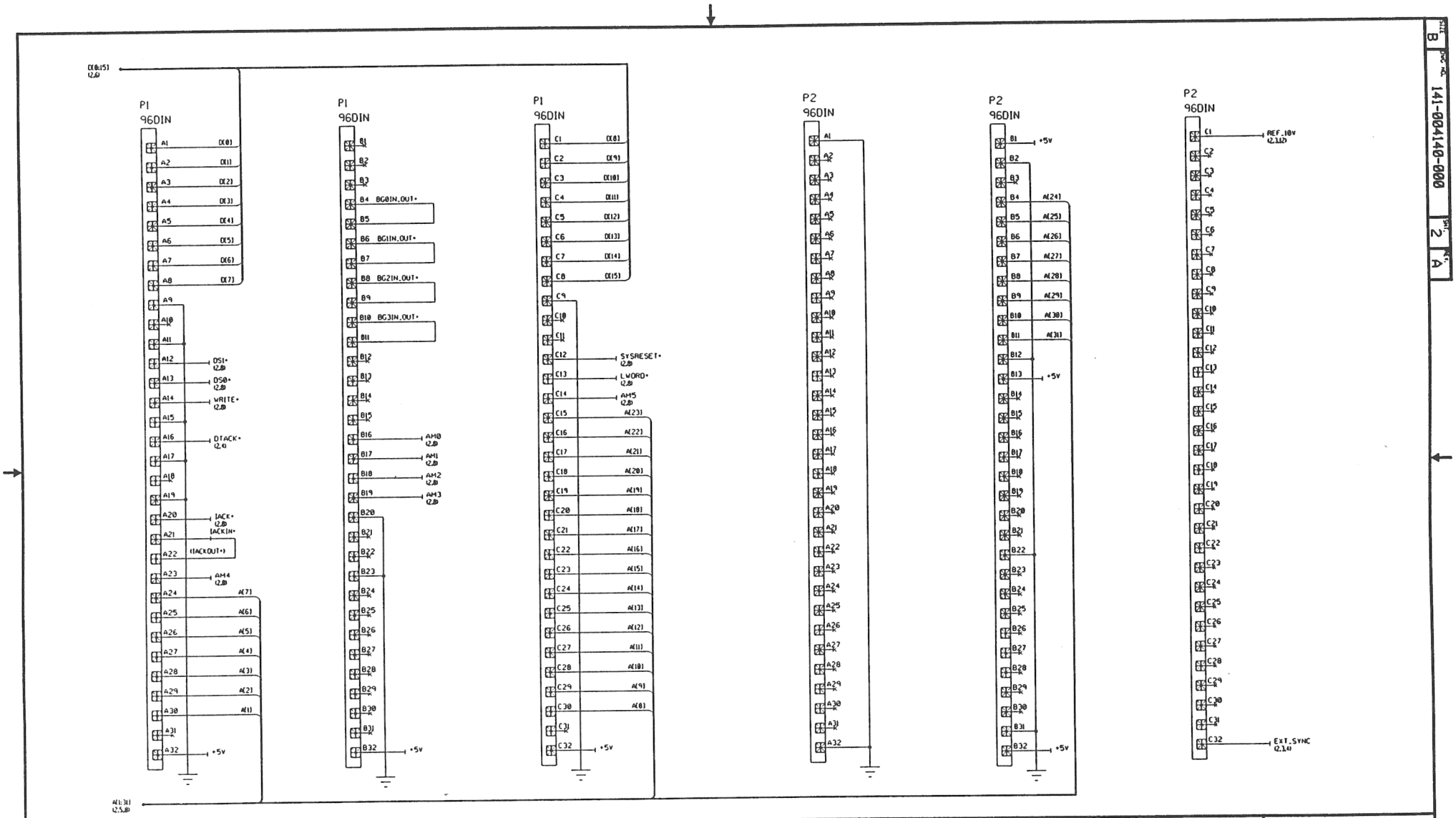

VMIC® Huntsville, Alabama 35803-3308 VME Microsystems International Corporation	SIZE B	FORM NO. 0BPH5	DWG NO. 141-004140-000
DRAWN D. O'TOOLE CHECKED C. Murphy 8-12-94	SCALE NONE		SHEET 2

SIZE B DWG NO. 141-004140-000 SH. 2 REV. A

SCHEMATIC NAME: page SHEET NUMBER: 2 DATE: Aug 11, 1994

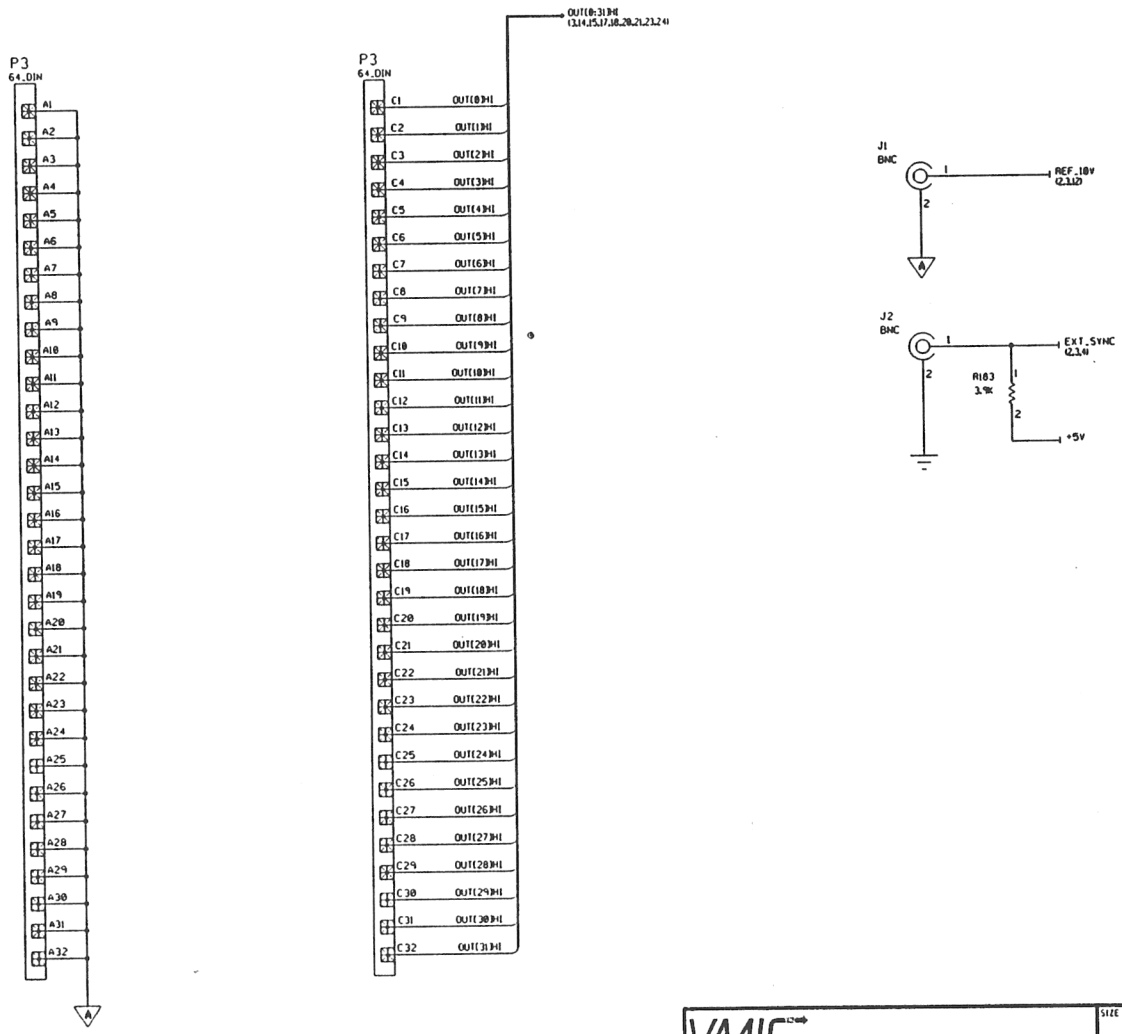

VMIC® Huntsville, Alabama 35803-3308 VME Microsystems International Corporation	SIZE B	FORM NO. 0BPH5	DWG NO. 141-004140-000
DRAWN D. O'TOOLE CHECKED C. Murphy 8-12-94	SCALE NONE		SHEET 3

SCHEMATIC NAME: page SHEET NUMBER: 3 DATE: Aug 11, 1994

SIZE B DWG NO. 141-004140-000 SH. 3 REV. A

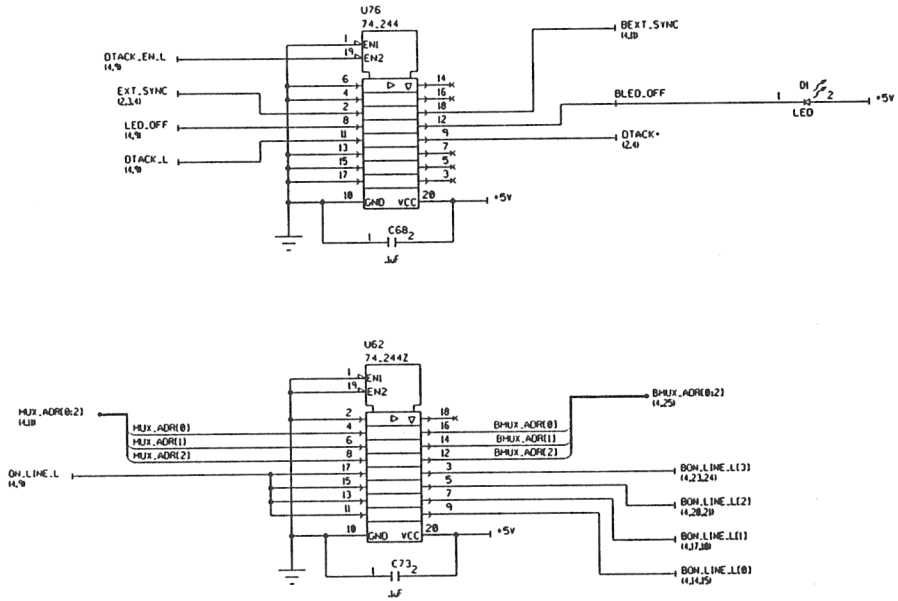

VMIC® Huntsville, Alabama 35803-3308 VME Microsystems International Corporation	SIZE B	FORM NO. 0BPH5	DWG NO. 141-004140-000
DRAWN D. O'TOOLE			
CHECKED C. Mugger 8-12-94	SCALE NONE		SHEET 4

SCHEMATIC NAME: page SHEET NUMBER: 4 DATE: Aug 11, 1994

SIZE B DWG NO. 141-004140-000 SH. 4 REV. A

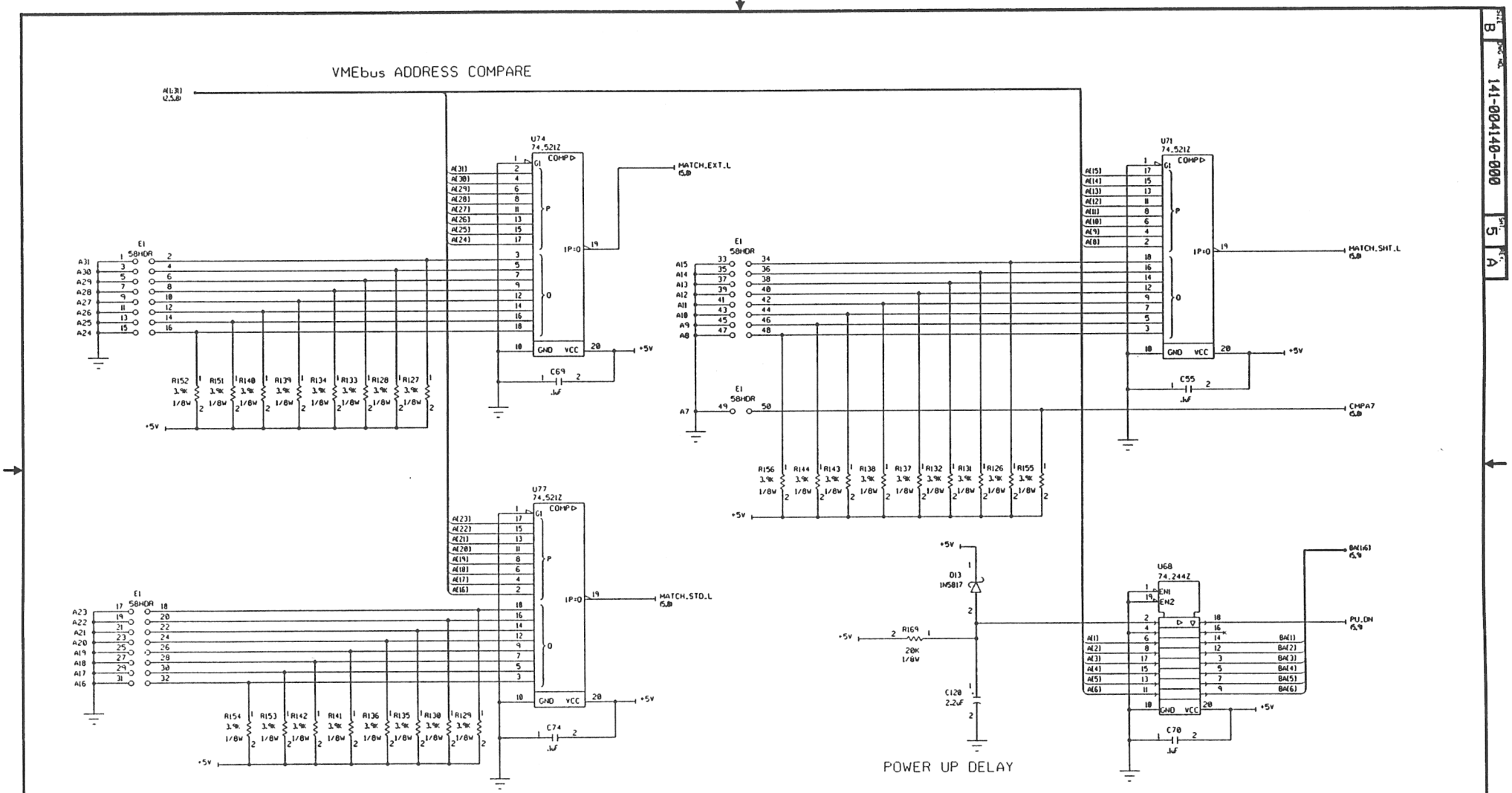

VMIC® Huntsville, Alabama 35803-3308 VME Microsystems International Corporation	SIZE B	FORM NO. 0BPH5	DWG NO. 141-004140-000
DRAWN D. O'TOOLE CHECKED C. Murphy 8-12-94	SCALE NONE		SHEET 5

SCHEMATIC NAME: peae SHEET NUMBER: 5 DATE: Aug 11, 1994

141-004140-000 SHT 5 REV A

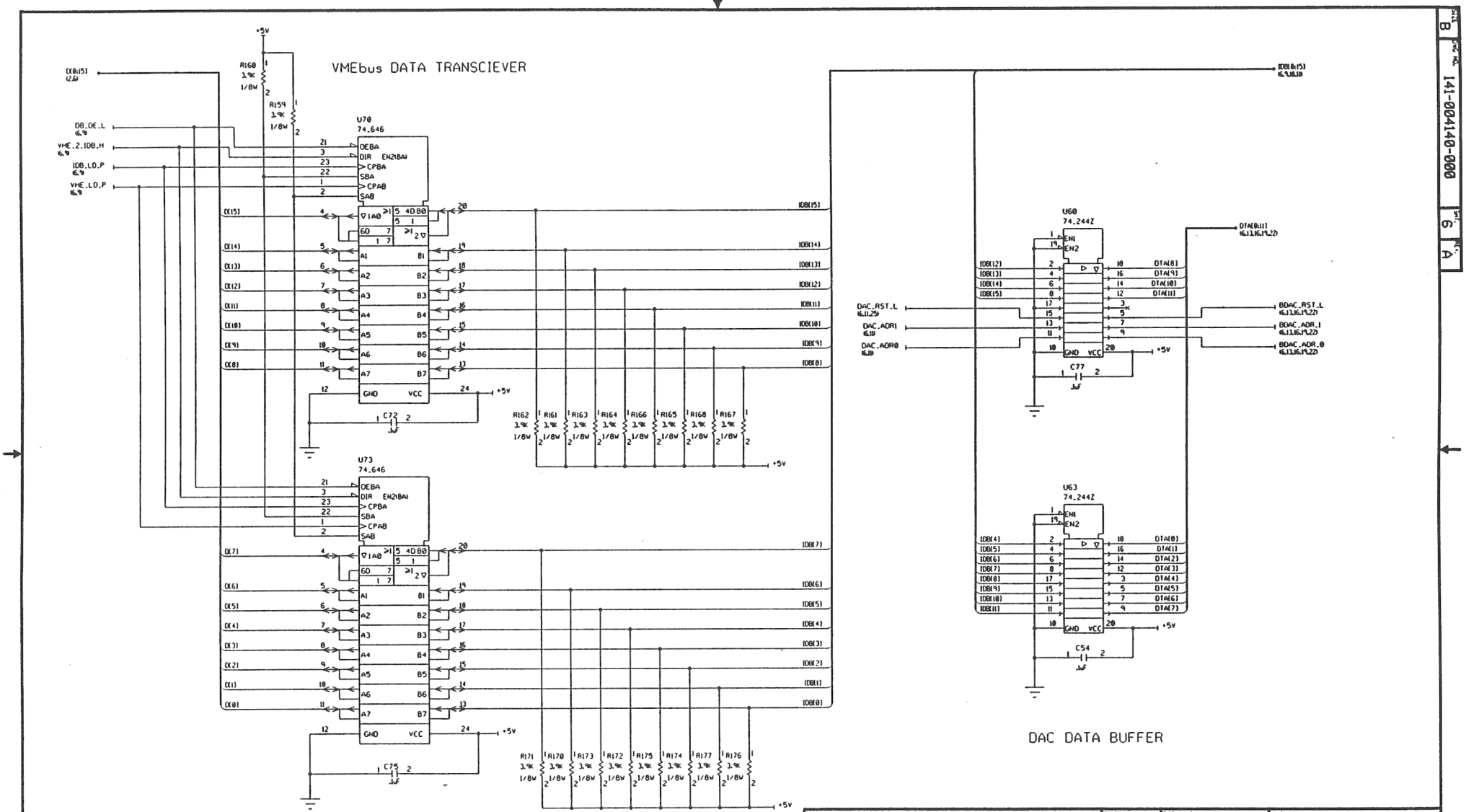

VMIC Huntsville, Alabama 35803-3308
VME Microsystems International Corporation

DRAWN D. O'TOOLE	SIZE B	FORM NO. 0BPH5	DWG NO. 141-004140-000
CHECKED C. Murphy 8-12-94	SCALE NONE		SHEET 6

SCHEMATIC NAME: page SHEET NUMBER: 6 DATE: Aug 11, 1994

SIZE B DWG NO. 141-004140-000 SHT. 6 REV. A

ACCESS MODE CONFIGURATION

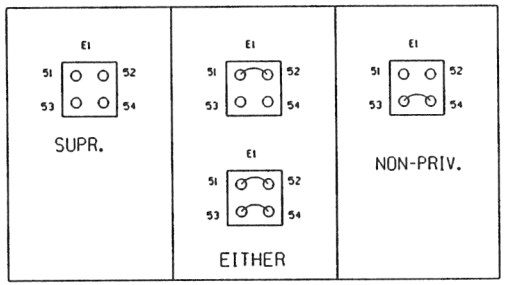

ADDRESS MODE CONFIGURATION

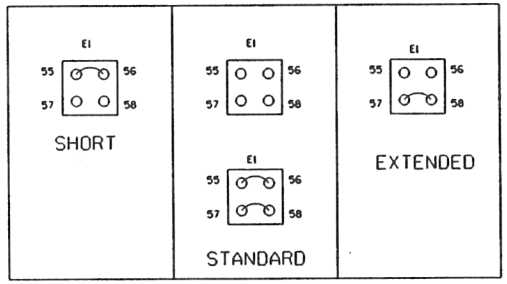

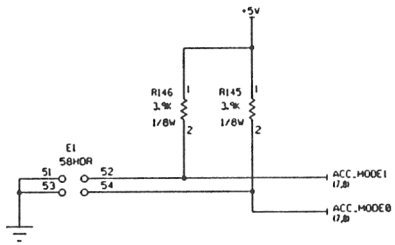

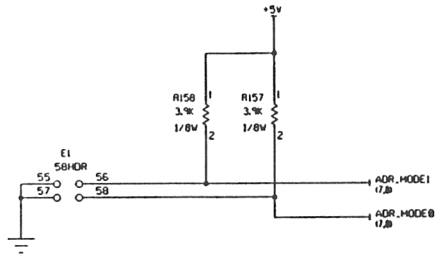

ADDRESS AND ACCESS MODE CONFIGURATION

VMIC® Huntsville, Alabama 35803-3308 VME Microsystems International Corporation	SIZE B	FORM NO. 0BPH5	DWG NO. 141-004140-000
DRAWN D. O'TOOLE CHECKED C. Murphy 8-12-94	SCALE NONE		SHEET 7

SCHEMATIC NAME: page SHEET NUMBER: 7 DATE: Aug 11, 1994

SIZE B DWG NO. 141-004140-000 SH 7 REV A

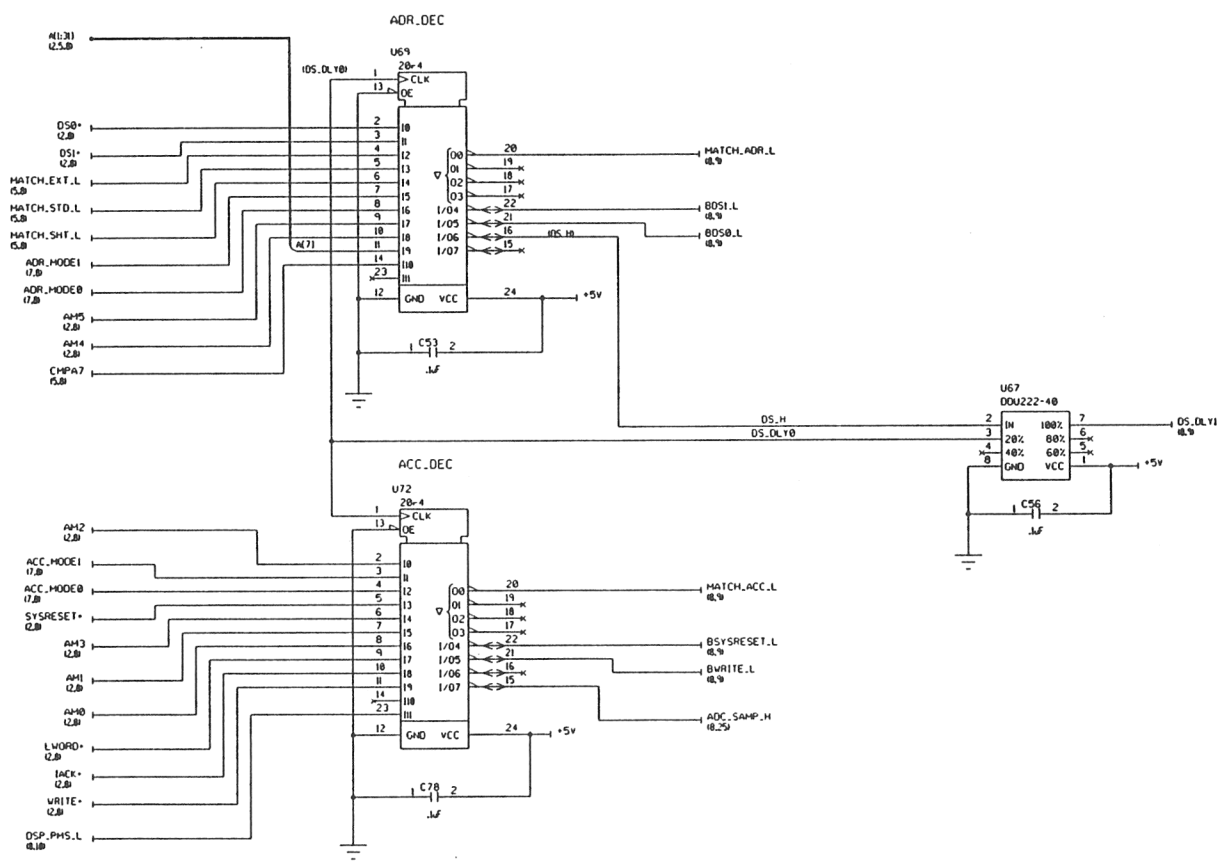

VMIC Huntsville, Alabama 35803-3308
VME Microsystems International Corporation

SIZE B	FORM NO. 0BPH5	DWG NO. 141-004140-000	
SCALE NONE		SHEET 8	

DRAWN: O.O'TOOLE
CHECKED: C. Murphy 8-12-94

SCHEMATIC NAME: page SHEET NUMBER: 8 DATE: Aug 11, 1994

SIZE B | DWG NO. 141-004140-000 | SH. 8 | REV. A

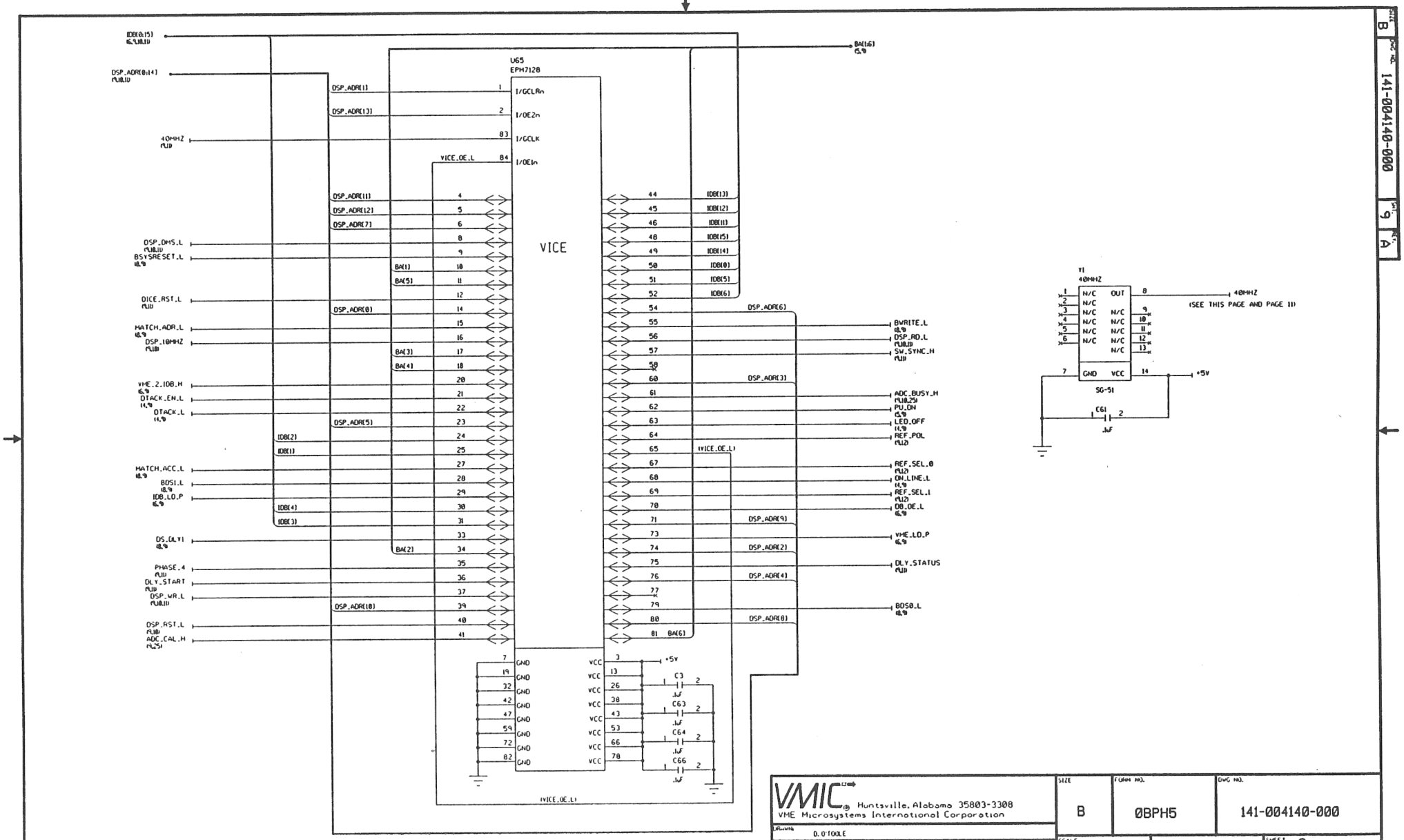

VMIC® Huntsville, Alabama 35803-3308 VME Microsystems International Corporation	SIZE B	FORM NO. 0BPH5	DWG NO. 141-004140-000
DRAWN D. O'TOOLE CHECKED C. Murphy 8-12-94	SCALE NONE		SHEET 9

SCHEMATIC NAME: page SHEET NUMBER: 9 DATE: Aug 11, 1994

SIZE B DWG NO. 141-004140-000 SH. 9 REV. A

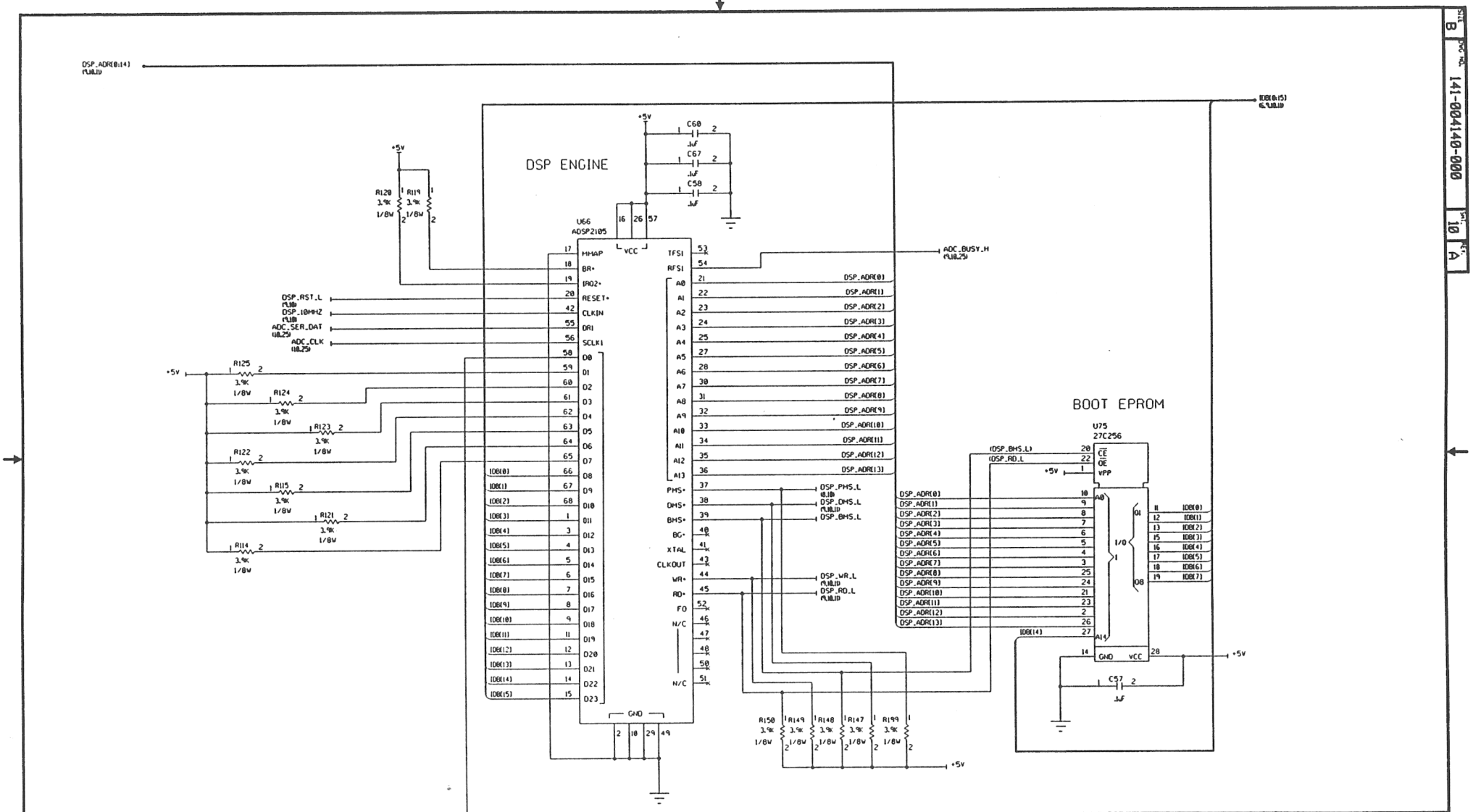

VMIC® Huntsville, Alabama 35803-3308 VME Microsystems International Corporation	SIZE B	FORM NO. 0BPH5	DWG NO. 141-004140-000
DRAWN D. O'TOOLE			
CHECKED C. Murphy 8-12-94	SCALE NONE		SHEET 10

SCHEMATIC NAME: pcoo SHEET NUMBER: 10 DATE: Aug 11, 1994

SIZE B DWG NO. 141-004140-000 SH. 10 REV. A

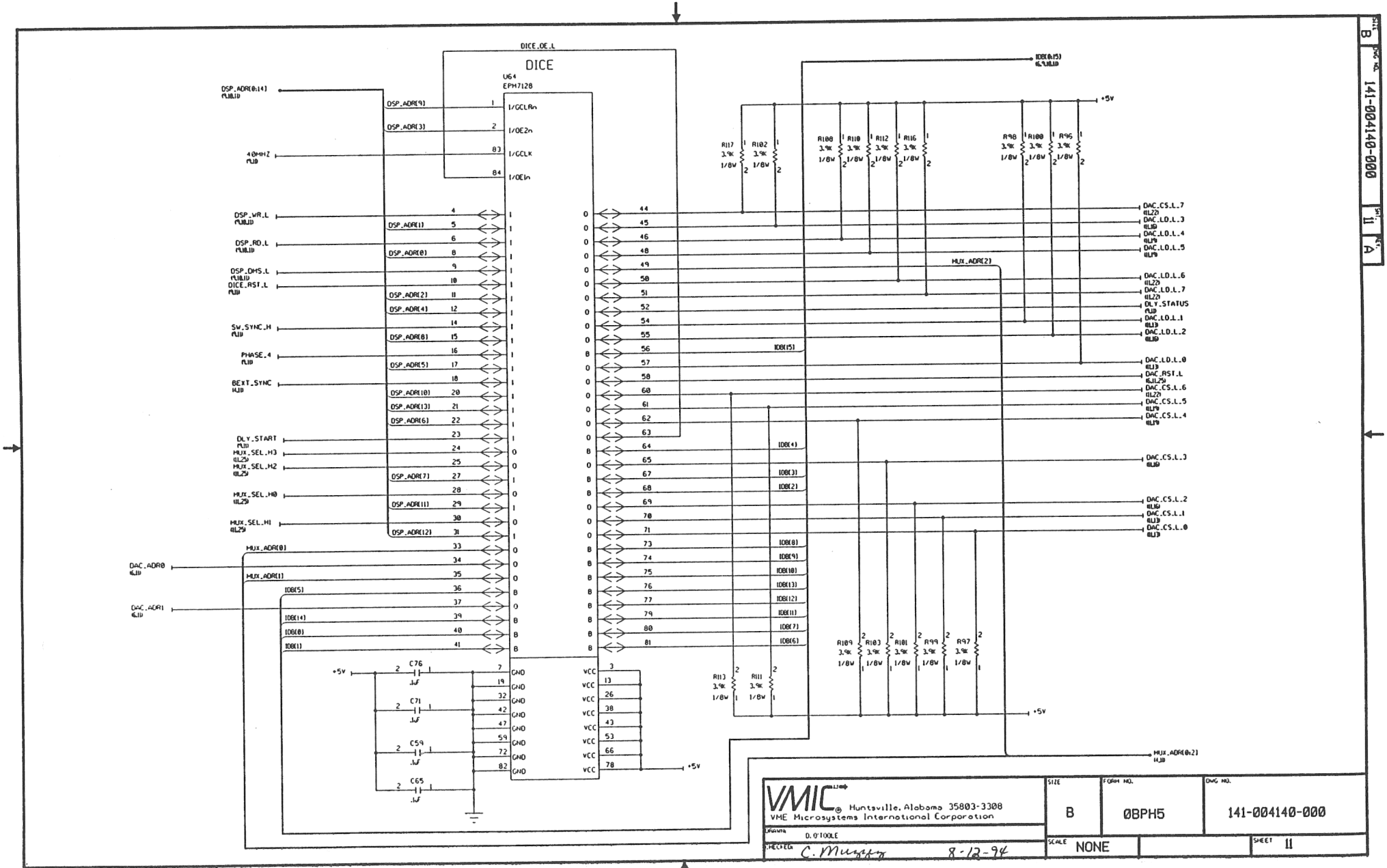
DICE
U64
EPM7128
DICE.OE.L
DSP.ADR(0:14)
40MHZ
DSP.WR.L
DSP.RD.L
DSP.DMS.L
DICE.RST.L
SW.SYNC.H
PHASE.4
BEXT.SYNC
DLY.START
MUX.SEL.H3
MUX.SEL.H2
MUX.SEL.H0
MUX.SEL.H1
DAC.ADR0
DAC.ADR1
MUX.ADR(0)
MUX.ADR(1)
MUX.ADR(2)
MUX.ADR(0:2)
IOB(0:15)
IOB(15)
IOB(4)
IOB(3)
IOB(2)
IOB(8)
IOB(9)
IOB(10)
IOB(13)
IOB(12)
IOB(11)
IOB(7)
IOB(6)
IOB(5)
IOB(14)
IOB(0)
IOB(1)
DAC.CS.L.7
DAC.LD.L.3
DAC.LD.L.4
DAC.LD.L.5
DAC.LD.L.6
DAC.LD.L.7
DLY.STATUS
DAC.LD.L.1
DAC.LD.L.2
DAC.LD.L.0
DAC.RST.L
DAC.CS.L.6
DAC.CS.L.5
DAC.CS.L.4
DAC.CS.L.3
DAC.CS.L.2
DAC.CS.L.1
DAC.CS.L.0
+5V
GND
VCC
C76
C71
C59
C65
.1uF
R117
R102
R108
R110
R112
R116
R98
R100
R96
R109
R103
R101
R99
R97
R113
R111
3.9K
1/8W
VMIC
Huntsville, Alabama 35803-3308
VME Microsystems International Corporation
D. O'TOOLE
C. Murphy
8-12-94
SIZE
B
FORM NO.
0BPH5
DWG NO.
141-004140-000
SCALE
NONE
SHEET
11
SCHEMATIC NAME: DBBB SHEET NUMBER: 11 DATE: Aug 11, 1994

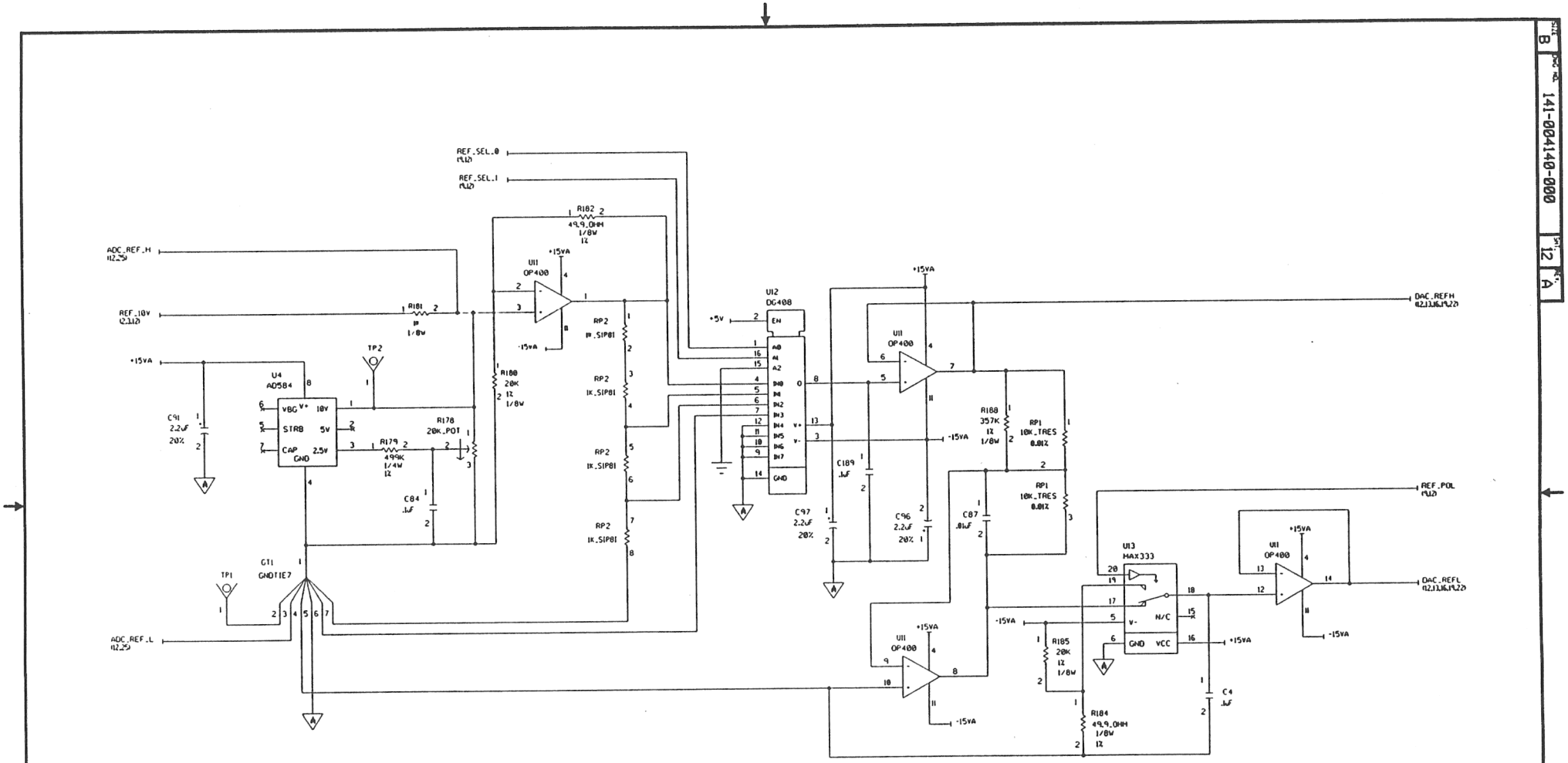

VMIC® Huntsville, Alabama 35803-3308 VME Microsystems International Corporation	SIZE B	FORM NO. 0BPH5	DWG NO. 141-004140-000
DRAWN D. O'TOOLE CHECKED C. Murphy 8-12-94	SCALE NONE		SHEET 12

SCHEMATIC NAME: page SHEET NUMBER: 12 DATE: Aug 11, 1994

SIZE B DWG NO. 141-004140-000 SHT. 12 REV. A

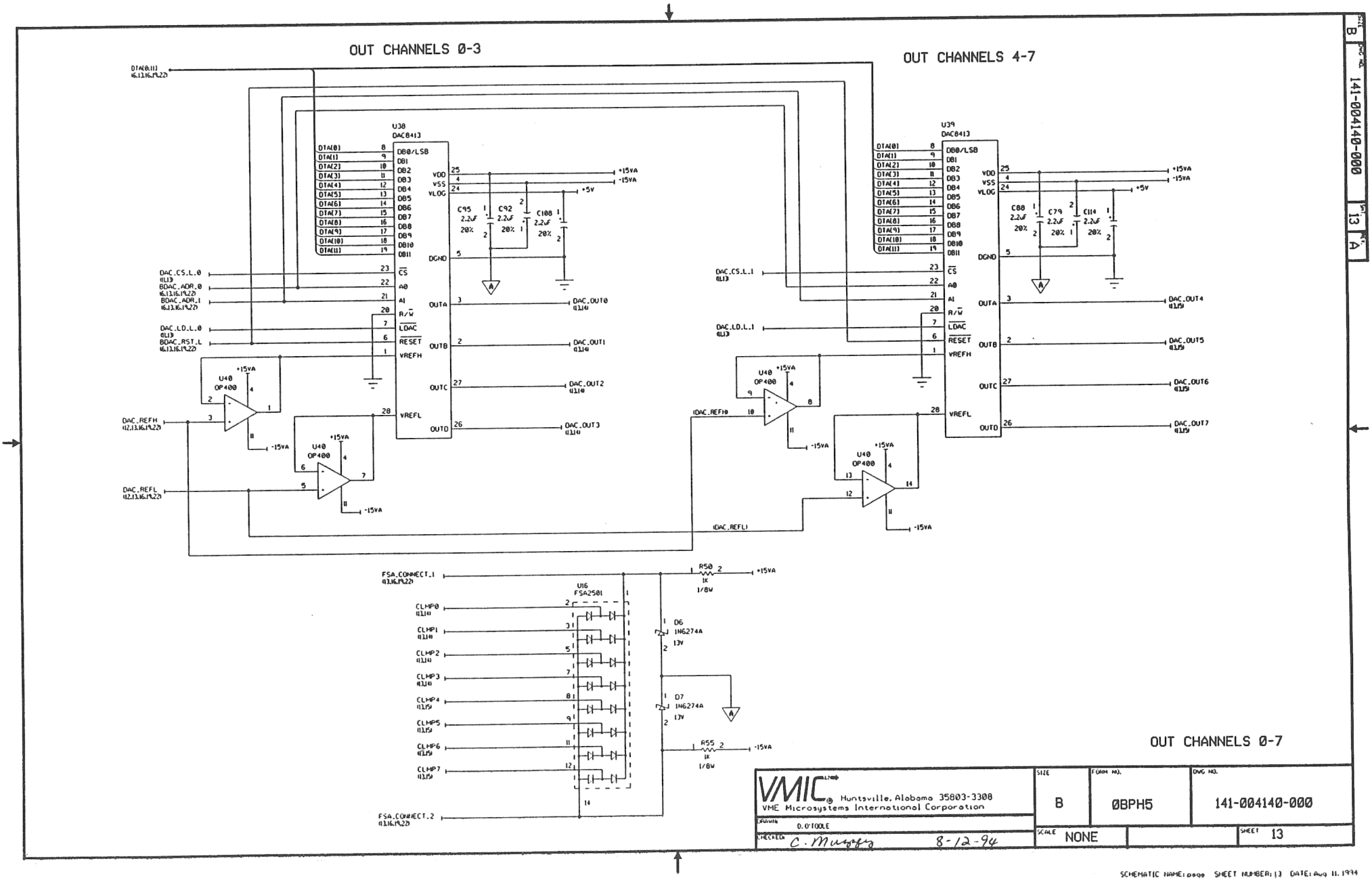
OUT CHANNELS 0-3
OUT CHANNELS 4-7
OUT CHANNELS 0-7
U38
DAC8413
U39
DAC8413
U40
OP400
U16
FSA2501
DTA(0:11)
DAC.CS.L.0
BDAC.ADR.0
BDAC.ADR.1
DAC.LD.L.0
BDAC.RST.L
DAC.REFH
DAC.REFL
DAC.CS.L.1
DAC.LD.L.1
DAC.OUT0
DAC.OUT1
DAC.OUT2
DAC.OUT3
DAC.OUT4
DAC.OUT5
DAC.OUT6
DAC.OUT7
FSA.CONNECT.1
FSA.CONNECT.2
CLMP0
CLMP1
CLMP2
CLMP3
CLMP4
CLMP5
CLMP6
CLMP7
R50
R55
D6
D7
1N6274A
+15VA
-15VA
+5V
VMIC
Huntsville, Alabama 35803-3308
VME Microsystems International Corporation
D. O'TOOLE
C. Murphy
8-12-94
SIZE
B
FORM NO.
0BPH5
DWG NO.
141-004140-000
SCALE
NONE
SHEET
13
SCHEMATIC NAME: 0000 SHEET NUMBER: 13 DATE: Aug 11, 1994

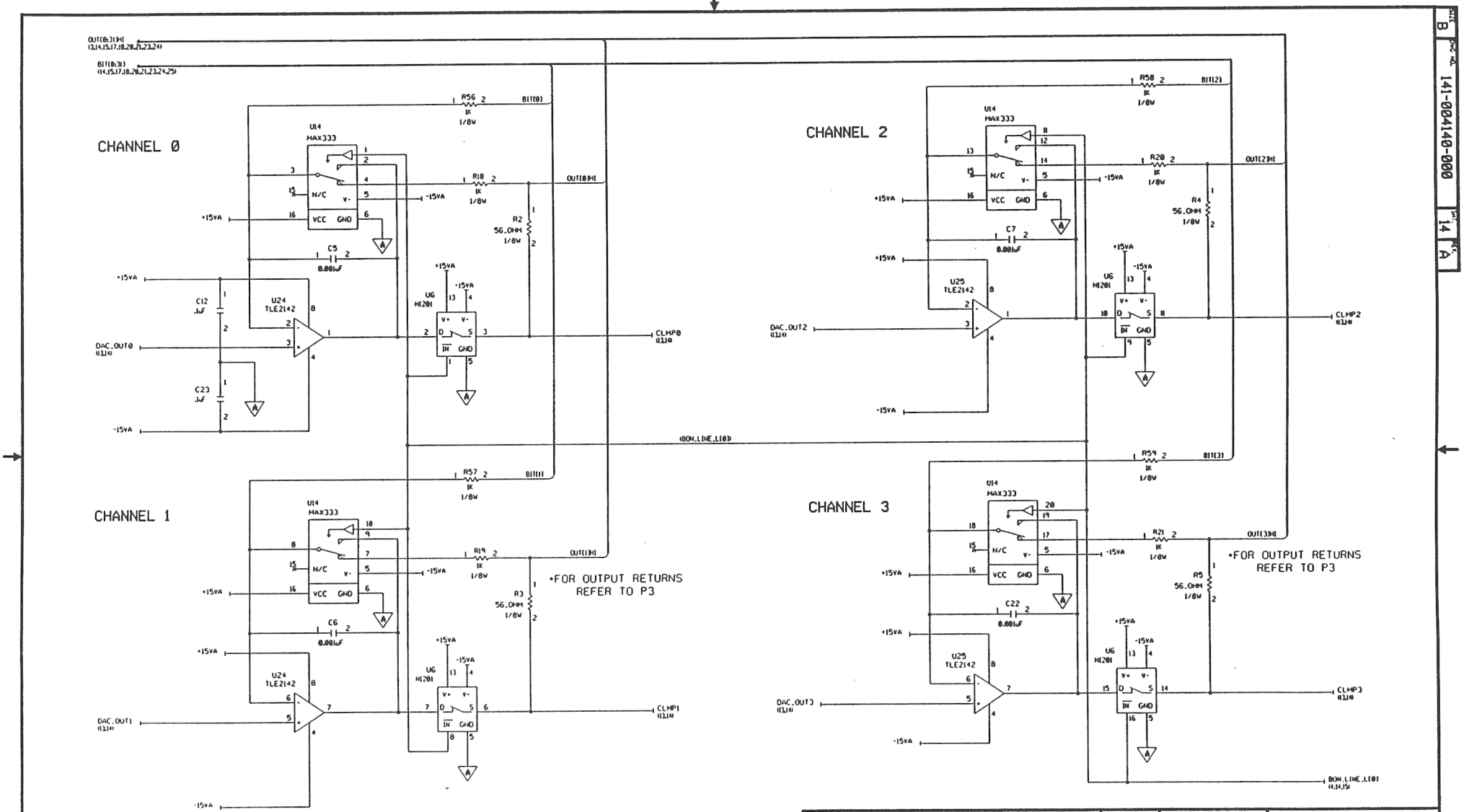

VMIC® Huntsville, Alabama 35803-3308
VME Microsystems International Corporation

DRAWN: D. O'TOOLE	SIZE B	FORM NO. 0BPH5	DWG NO. 141-004140-000
CHECKED: C. Mugge 8-12-94	SCALE NONE		SHEET 14

SCHEMATIC NAME: page SHEET NUMBER: 14 DATE: Aug 11, 1994

SIZE B DWG NO. 141-004140-000 SHT. 14 REV. A

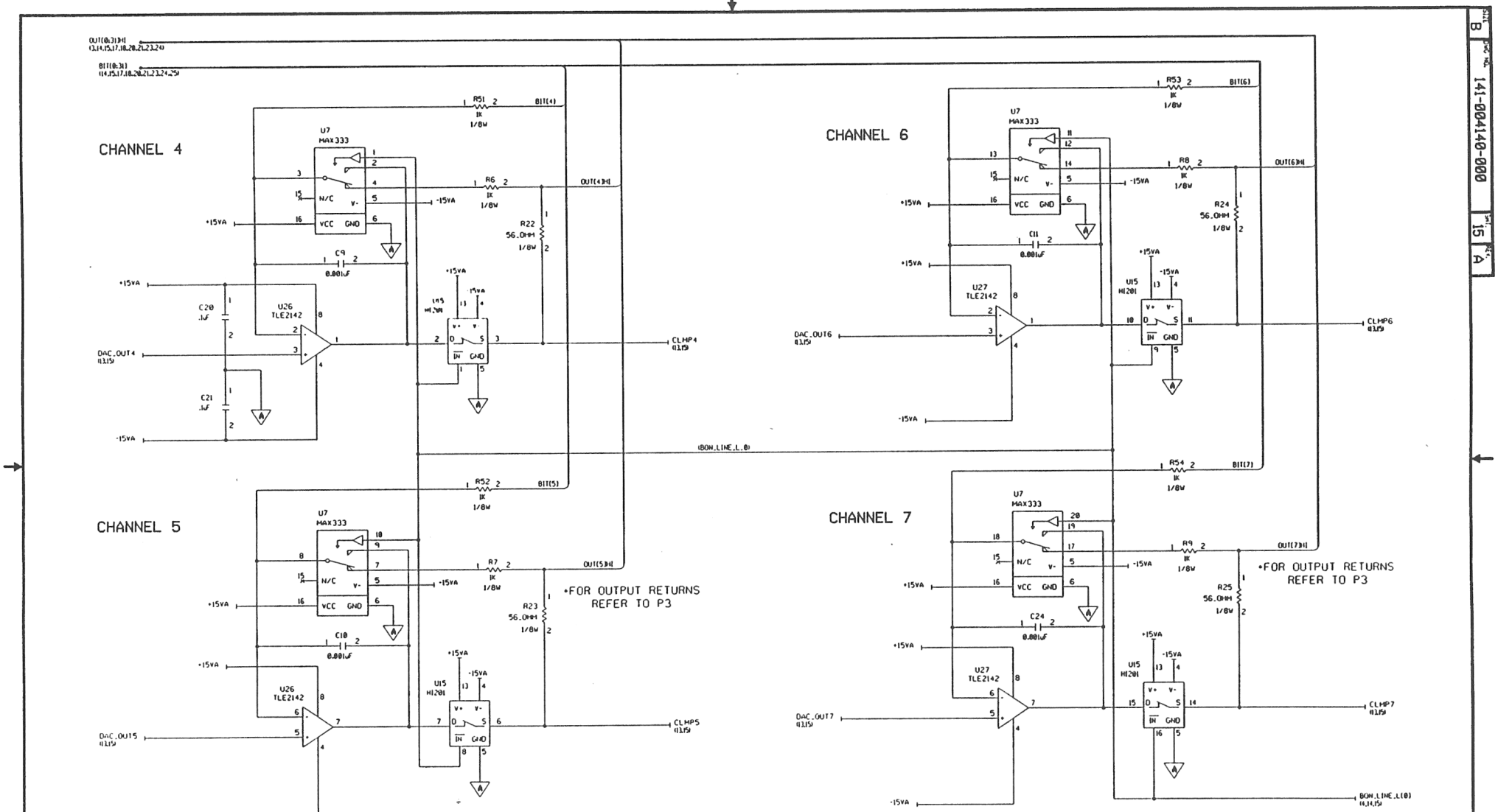

VMIC Huntsville, Alabama 35803-3308
VME Microsystems International Corporation

DRAWN D. O'TOOLE	SIZE B	FORM NO. 0BPH5	DWG NO. 141-004140-000
CHECKED C. Murphy 8-12-94	SCALE NONE		SHEET 15

SCHEMATIC NAME: page SHEET NUMBER: 15 DATE: Aug 11, 1994

SIZE B | DWG NO. 141-004140-000 | SHT 15 | REV A

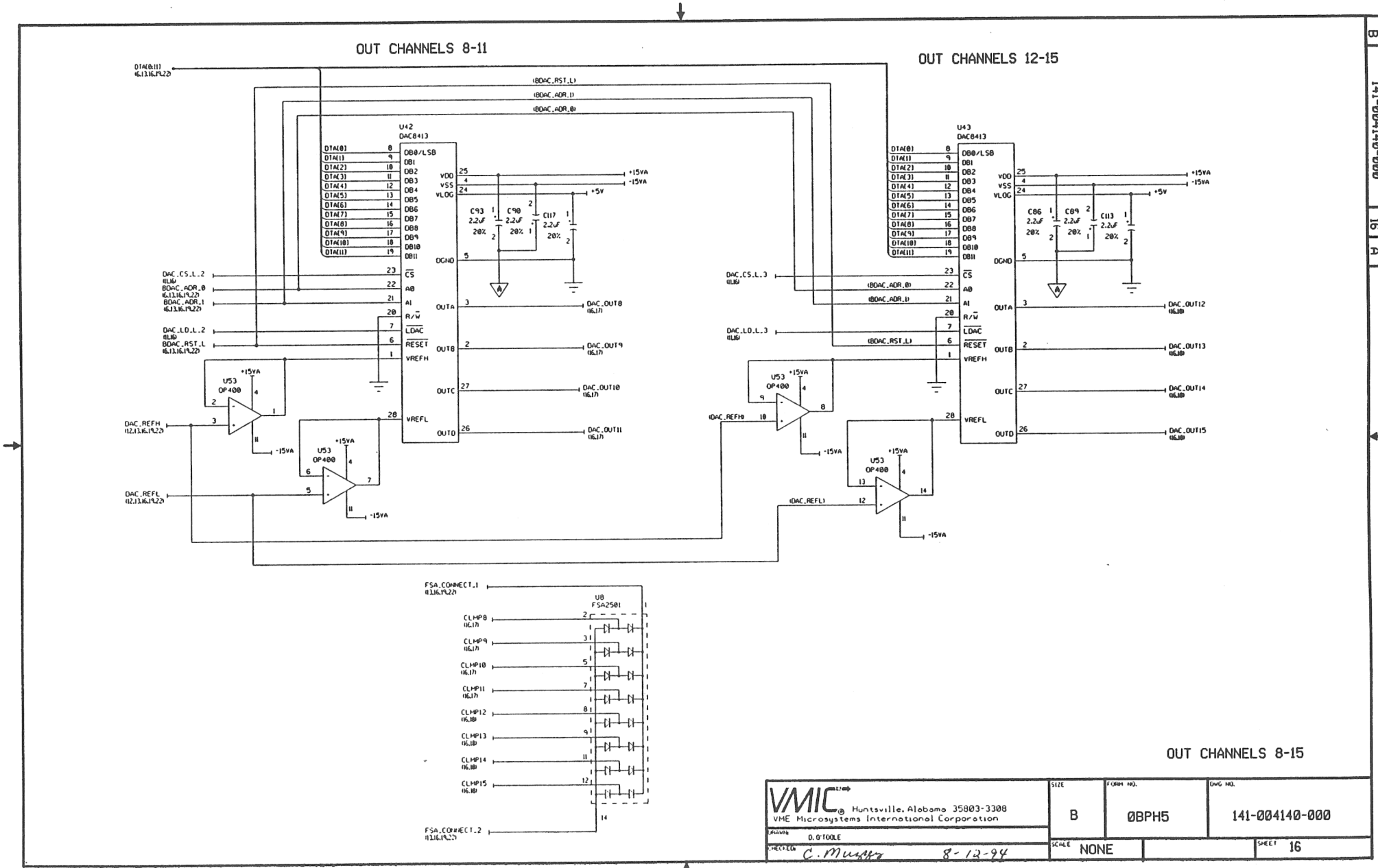

VMIC® Huntsville, Alabama 35803-3308
VME Microsystems International Corporation

DRAWN D. O'TOOLE	SIZE B	FORM NO. 0BPH5	DWG NO. 141-004140-000
CHECKED C. Murphy 8-12-94	SCALE NONE		SHEET 16

SCHEMATIC NAME: page SHEET NUMBER: 16 DATE: Aug 11, 1994

SIZE B DWG NO. 141-004140-000 SHT. 16 REV. A

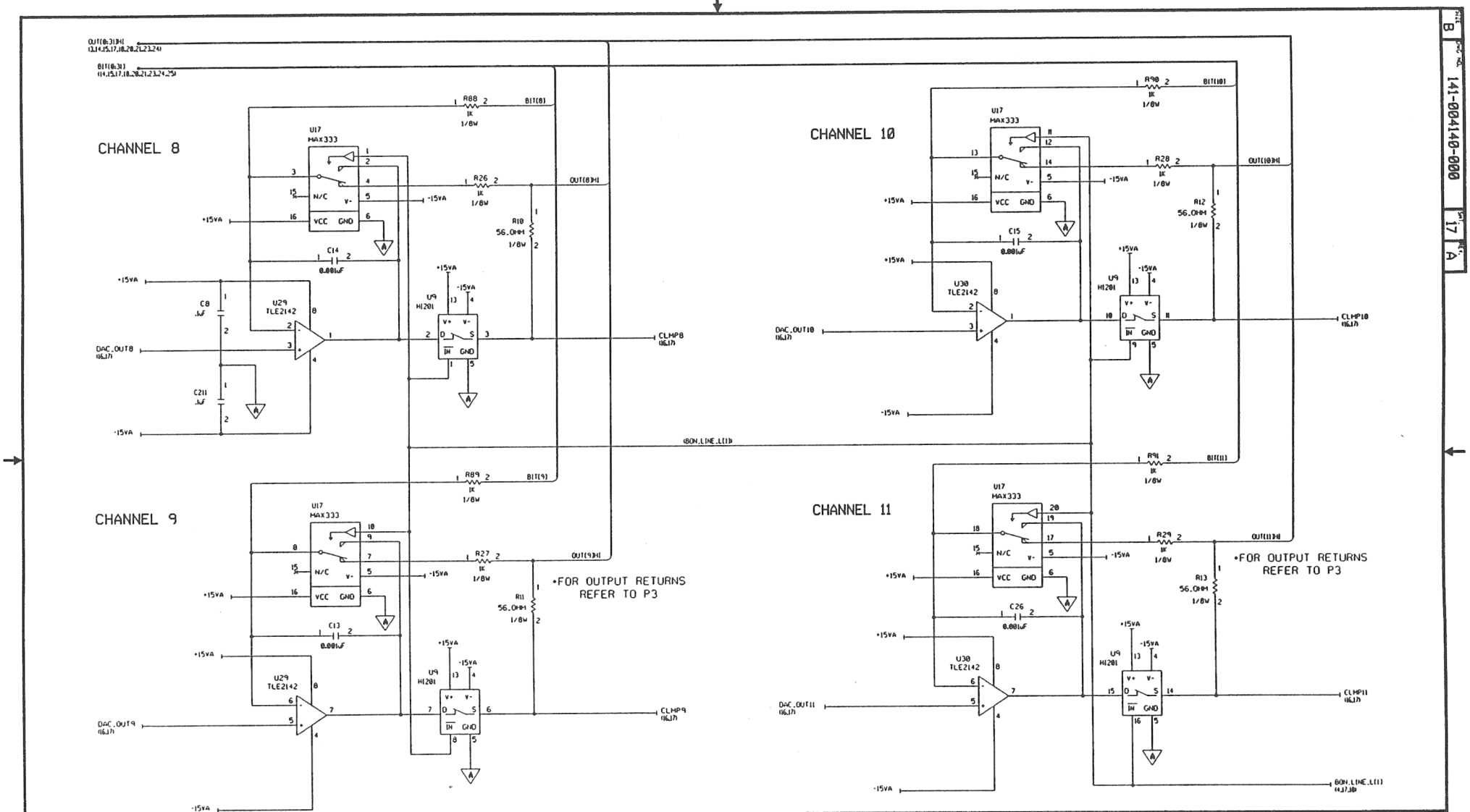

VMIC Huntsville, Alabama 35803-3308
VME Microsystems International Corporation

DRAWN D. O'TOOLE	SIZE B	FORM NO. 0BPH5	DWG NO. 141-004140-000
CHECKED C. Murphy 8-12-94	SCALE NONE		SHEET 17

SCHEMATIC NAME: page SHEET NUMBER: 17 DATE: Aug 11, 1994

SIZE B DWG NO. 141-004140-000 SH. 17 REV. A

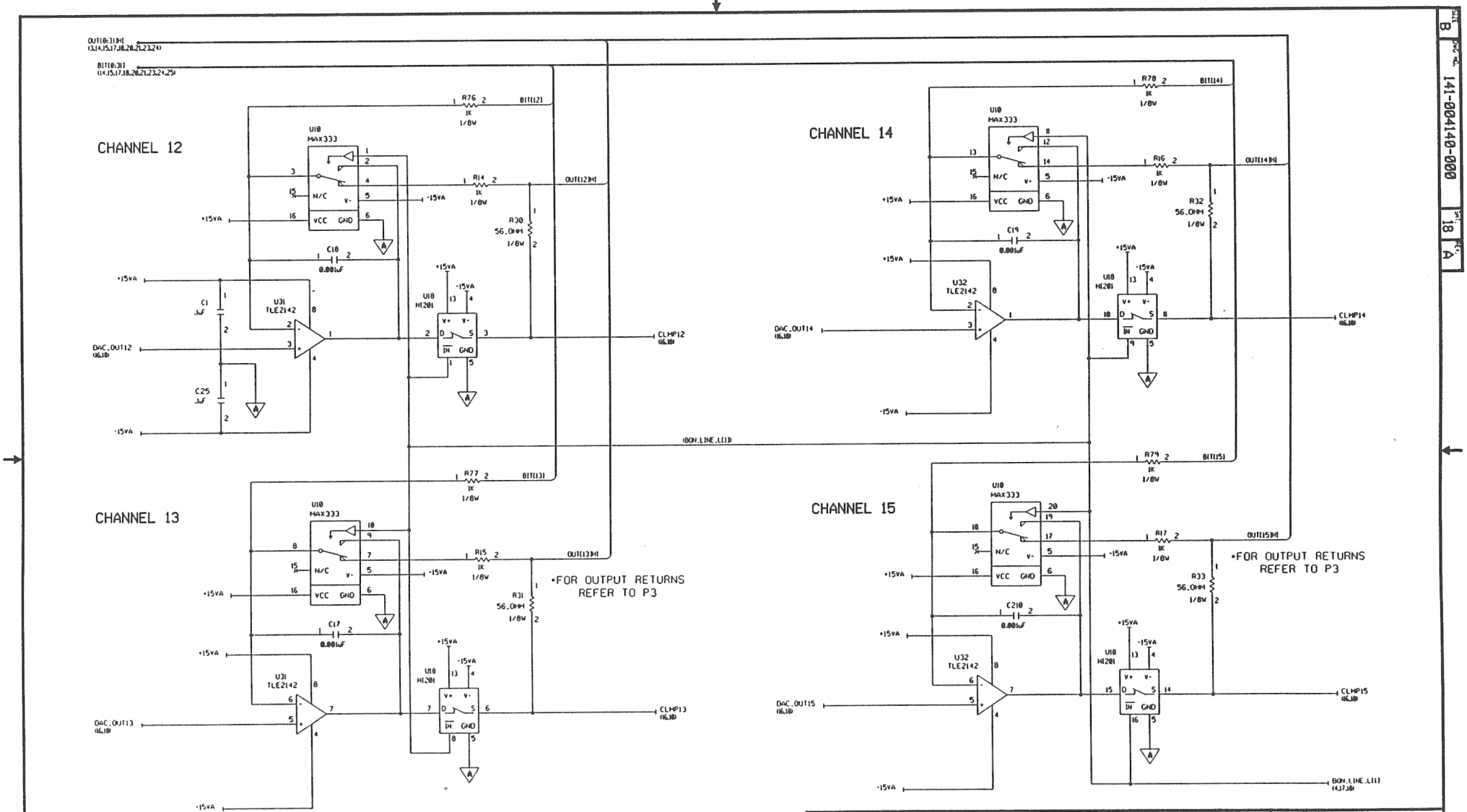

VMIC Huntsville, Alabama 35803-3308
VME Microsystems International Corporation

DRAWN D. O'TOOLE	SIZE B	FORM NO. 0BPH5	DWG NO. 141-004140-000
CHECKED C. Murphy 8-12-94	SCALE NONE		SHEET 18

SCHEMATIC NAME: page SHEET NUMBER: 18 DATE: Aug 11, 1994

SIZE B DWG NO. 141-004140-000 SHT. 18 REV. A

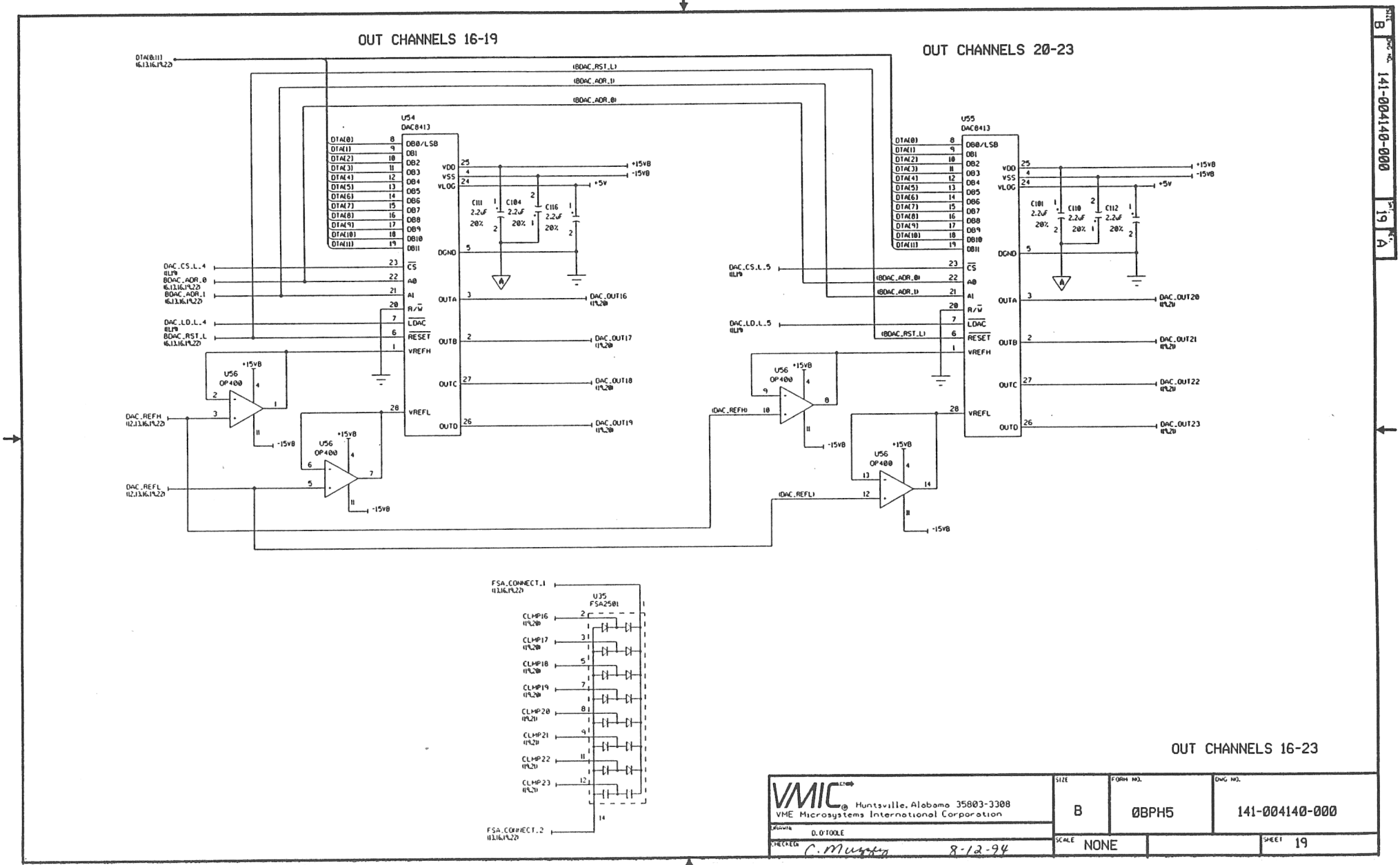

VMIC Huntsville, Alabama 35803-3308
VME Microsystems International Corporation

DRAWN D. O'TOOLE	SIZE B	FORM NO. 0BPH5	DWG NO. 141-004140-000
CHECKED C. Murphy 8-12-94	SCALE NONE		SHEET 19

SCHEMATIC NAME: p000 SHEET NUMBER: 19 DATE: AUG 11, 1994

B 141-004140-000 19 A

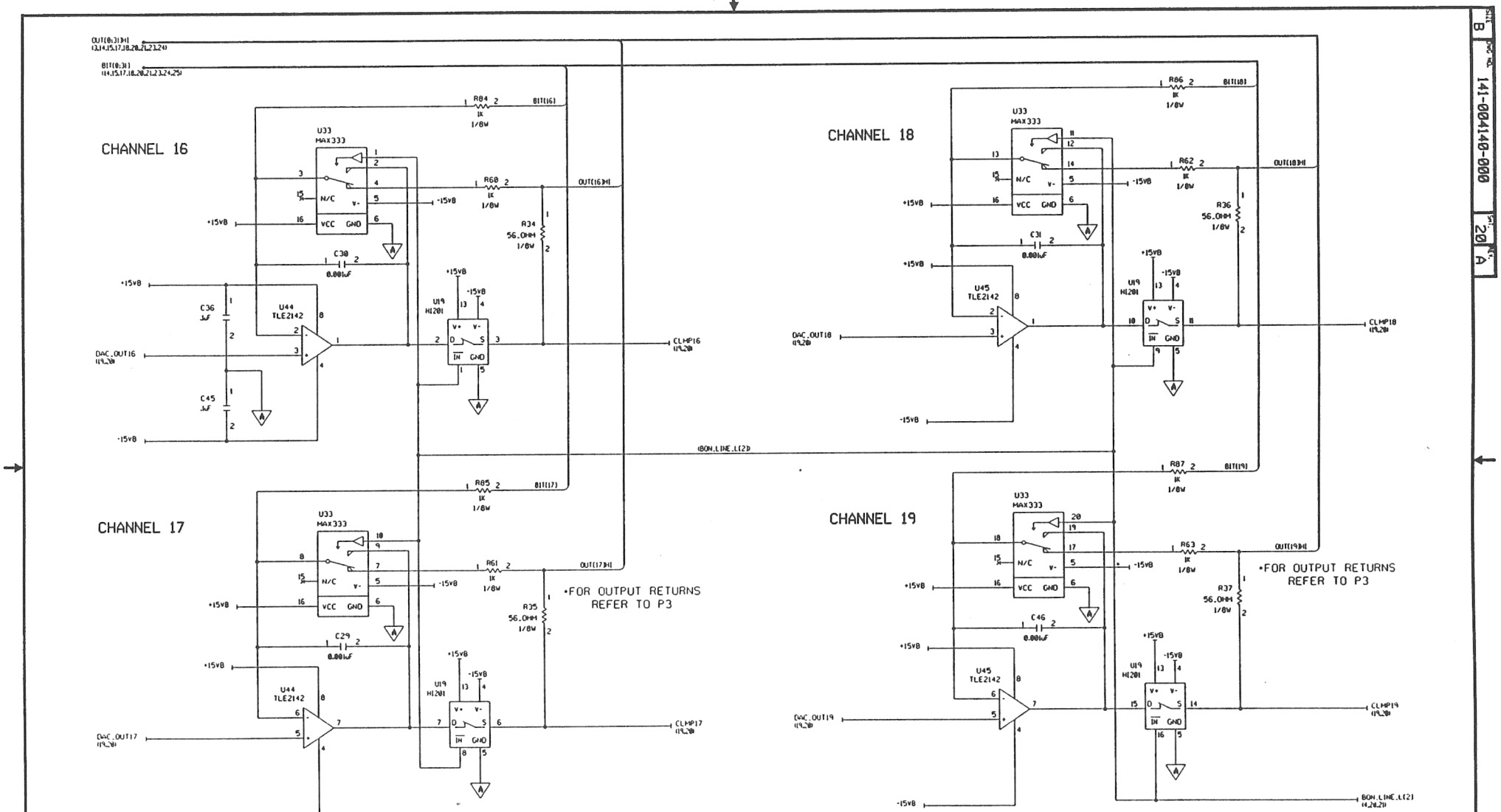

VMIC® Huntsville, Alabama 35803-3308
VME Microsystems International Corporation

DRAWN D. O'TOOLE	SIZE B	FORM NO. 0BPH5	DWG NO. 141-004140-000
CHECKED C. Murphy 8-12-94	SCALE NONE		SHEET 20

SCHEMATIC NAME: pooo SHEET NUMBER: 20 DATE: Aug 11, 1994

SIZE B DWG NO. 141-004140-000 SH. 20 REV. A

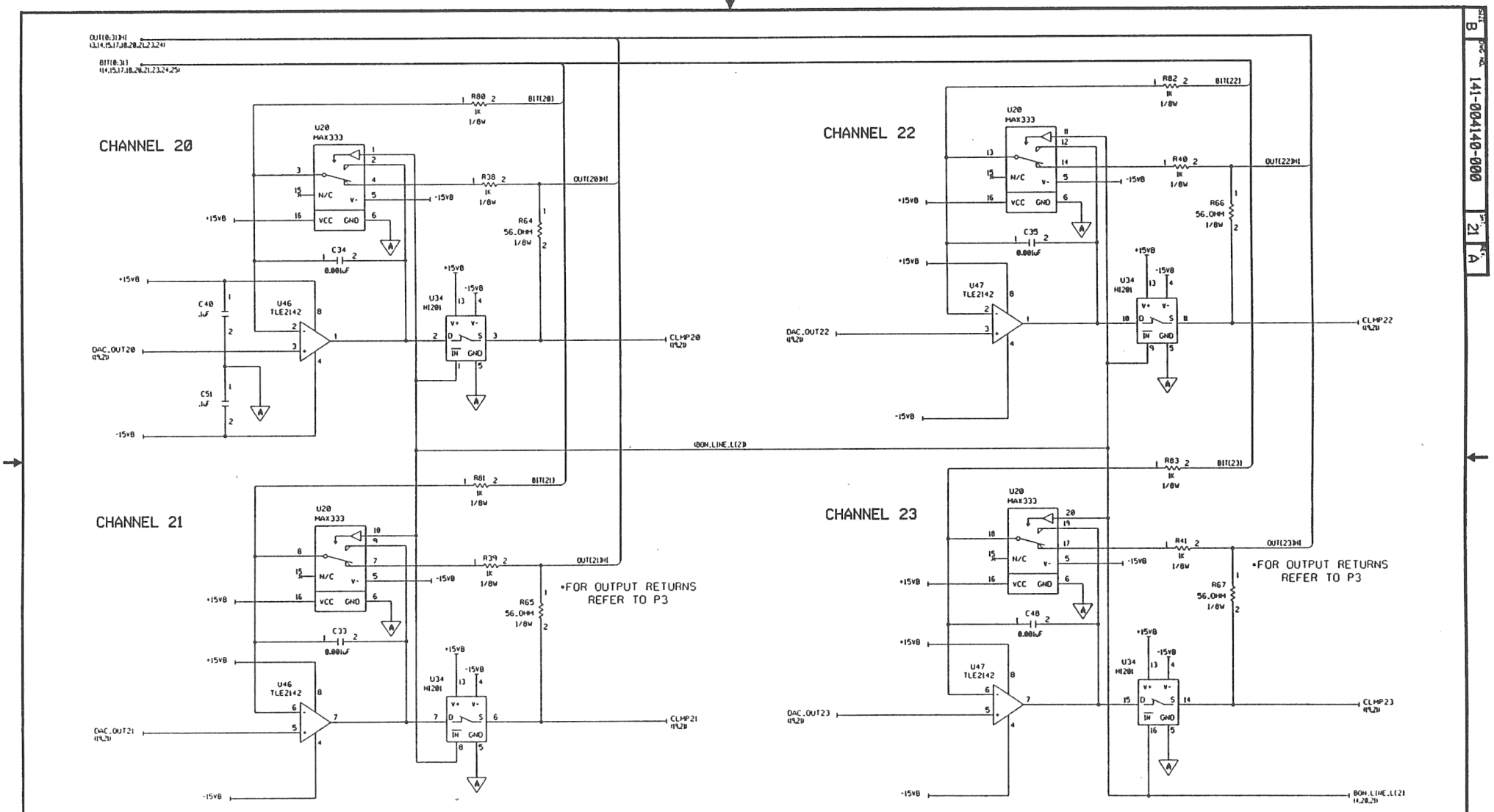

VMIC® Huntsville, Alabama 35803-3308
VME Microsystems International Corporation

DRAWN D. O'TOOLE	SIZE B	FORM NO. 0BPH5	DWG NO. 141-004140-000
CHECKED C. Murphy 8-12-94	SCALE NONE		SHEET 21

SCHEMATIC NAME: page SHEET NUMBER: 21 DATE: Aug 11, 1994

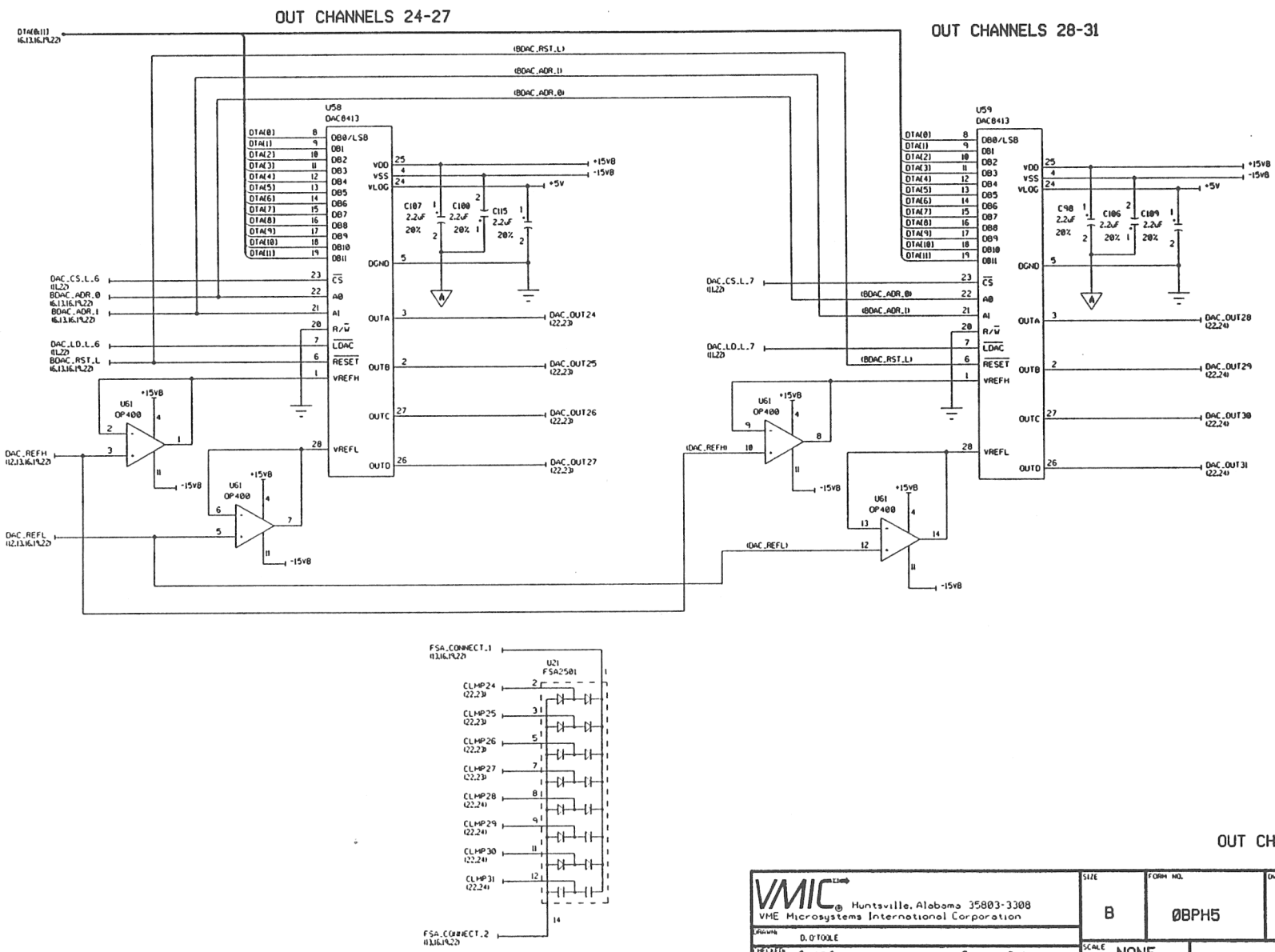

OUT CHANNELS 24-31

VMIC® Huntsville, Alabama 35803-3308 VME Microsystems International Corporation	SIZE B	FORM NO. 0BPH5	DWG NO. 141-004140-000
DRAWN D.O'TOOLE			
CHECKED C. Murphy 8-12-94	SCALE NONE		SHEET 22

SCHEMATIC NAME: page SHEET NUMBER: 22 DATE: Aug 11, 1994

SIZE B DWG NO. 141-004140-000 SHEET 22 REV A

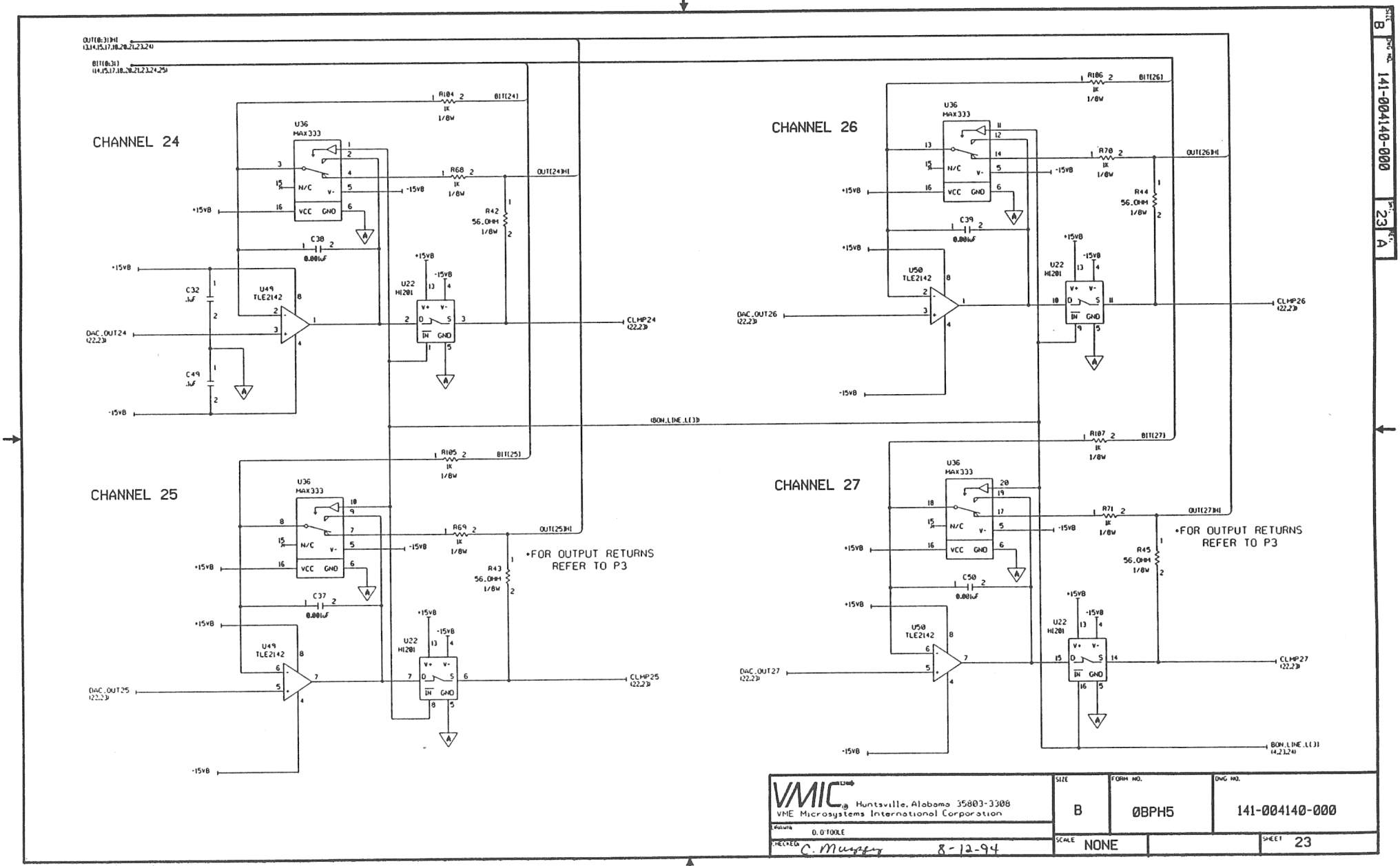

VMIC Huntsville, Alabama 35803-3308
VME Microsystems International Corporation

DRAWN D. O'TOOLE	SIZE B	FORM NO. 0BPH5	DWG NO. 141-004140-000
CHECKED C. Murphy 8-12-94	SCALE NONE		SHEET 23

SCHEMATIC NAME: none SHEET NUMBER: 23 DATE: Aug 11, 1994

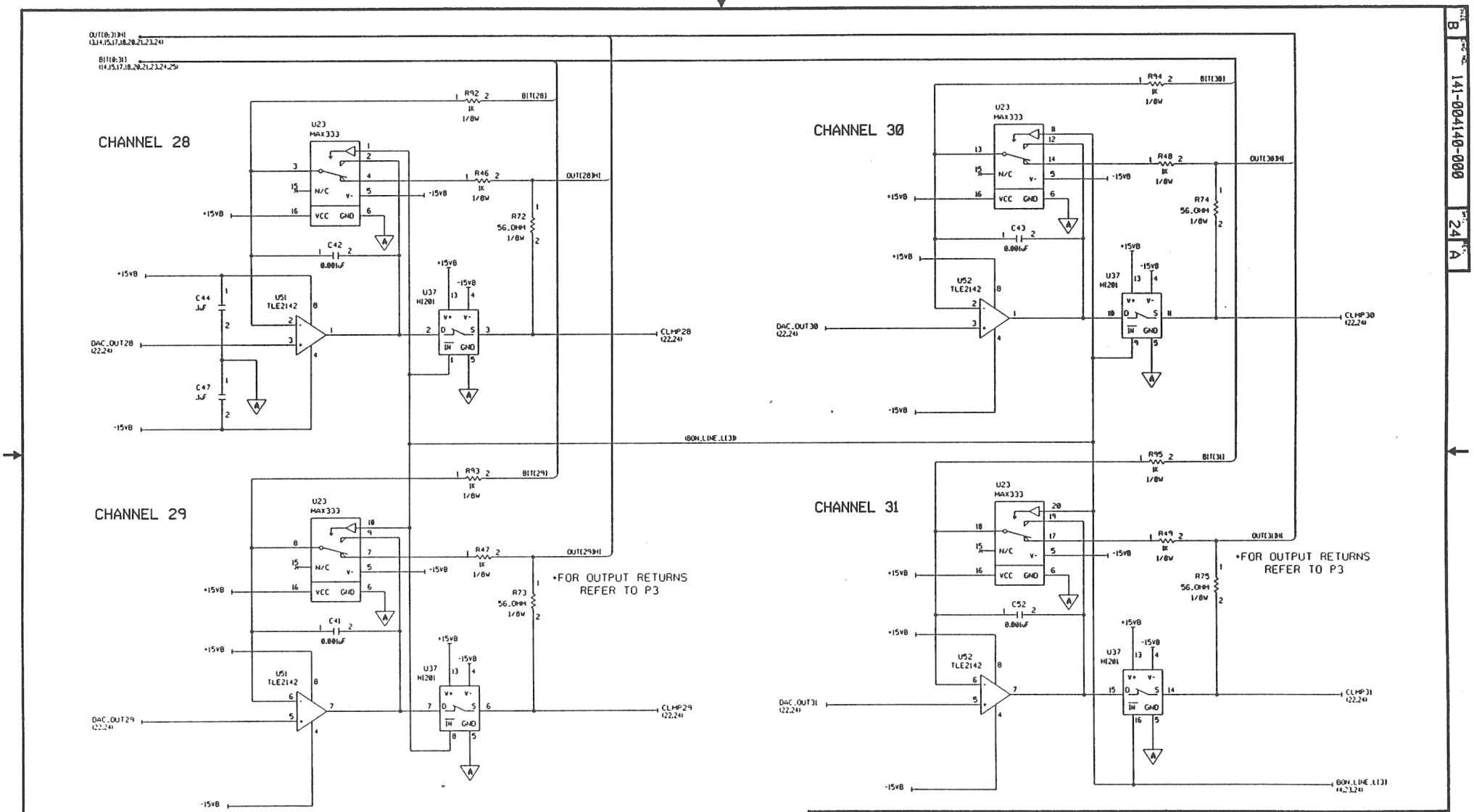

VMIC Huntsville, Alabama 35803-3308
VME Microsystems International Corporation

DRAWN D. O'TOOLE	SIZE B	FORM NO. 0BPH5	DWG NO. 141-004140-000
CHECKED C. Murphy 8-12-94	SCALE NONE		SHEET 24

SCHEMATIC NAME: page SHEET NUMBER: 24 DATE: Aug 11, 1994

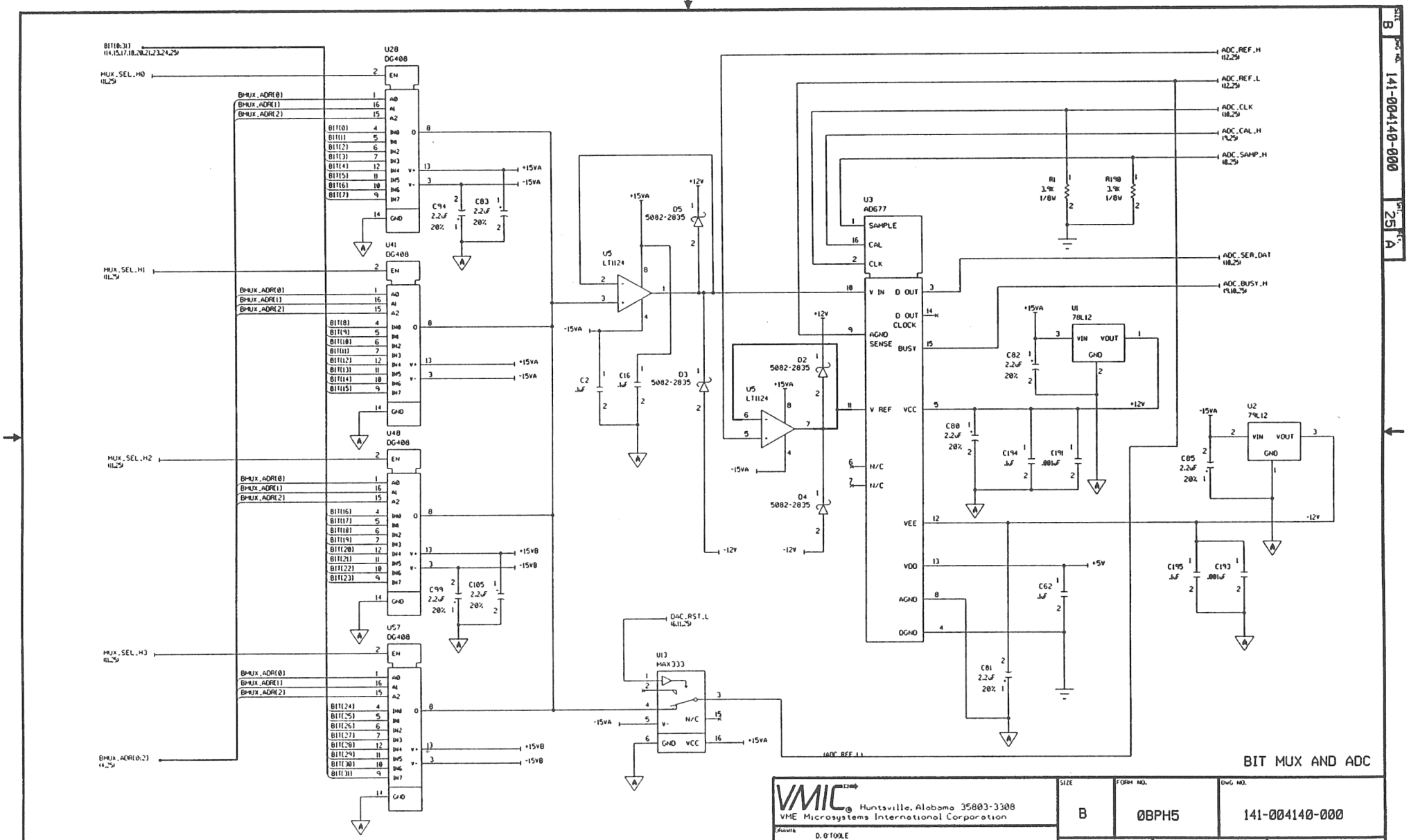
BIT MUX AND ADC
U28 DG408
U41 DG408
U48 DG408
U57 DG408
U5 LT1124
U3 AD677
U13 MAX333
U1 78L12
U2 79L12
D5 5082-2835
D3 5082-2835
D2 5082-2835
D4 5082-2835
R1 3.9K 1/8W
R190 3.9K 1/8W
ADC_REF_H
ADC_REF_L
ADC_CLK
ADC_CAL_H
ADC_SAMP_H
ADC_SER_DAT
ADC_BUSY_H
DAC_RST_L
MUX_SEL_H0
MUX_SEL_H1
MUX_SEL_H2
MUX_SEL_H3
BMUX_ADR(0:2)
BIT(0:31)
+15VA
-15VA
+15VB
-15VB
+12V
-12V
+5V
SIZE B
DWG NO. 141-004140-000
SHT. 25
VMIC Huntsville, Alabama 35803-3308
VME Microsystems International Corporation
DRAWN D. O'TOOLE
CHECKED C. Murphy 8-12-94
SIZE B
FORM NO. 0BPH5
DWG NO. 141-004140-000
SCALE NONE
SHEET 25
SCHEMATIC NAME: page SHEET NUMBER: 25 DATE: Aug 11, 1994

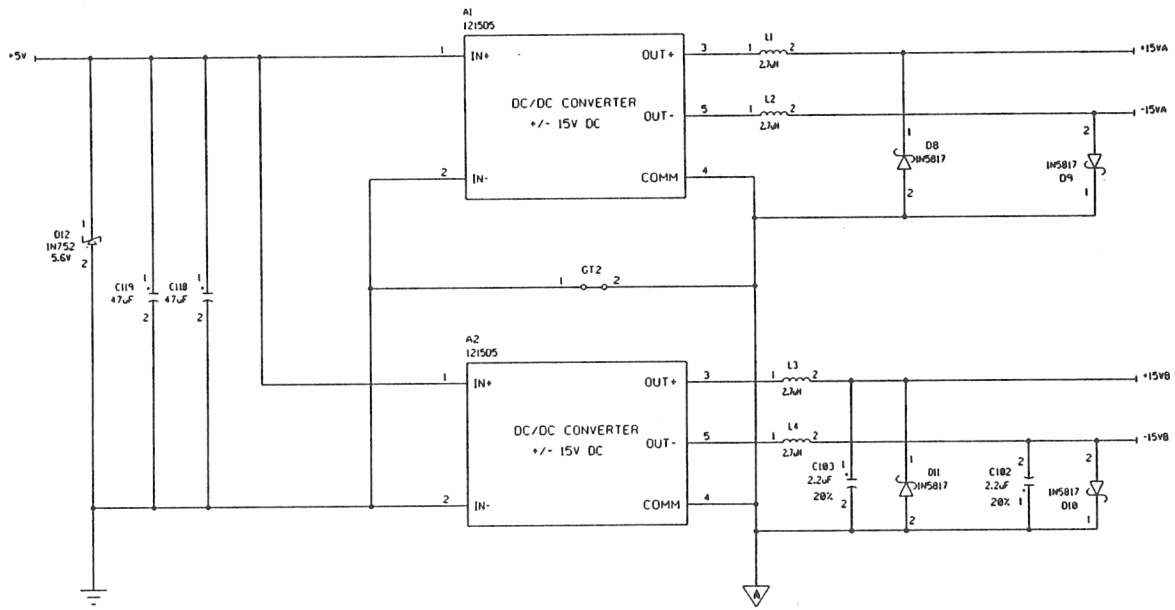

(CHANNELS 0-15)

(CHANNELS 16-31)

POWER SUPPLY

VMIC Huntsville, Alabama 35803-3308 VME Microsystems International Corporation	SIZE B	FORM NO. 0BPH5	DWG NO. 141-004140-000
DRAWN D. O'TOOLE			
CHECKED C. Murphy 8-12-94	SCALE NONE		SHEET 26 OF 26

SCHEMATIC NAME: page SHEET NUMBER: 26 DATE: Aug 11, 1994

SIZE B DWG NO. 141-004140-000 SHT. 26 REV. A

SIZE	DWG NO	SH	REV
A	132-004140-000	1	B

NOTES:

1. FOR SCHEMATIC DIAGRAM SEE 141-004140-000.
2. FOR TEST PROCEDURE SEE 510-004140-000.
3. FOR DOCUMENT SET SEE 110-004140-000.

REVISION STATUS OF 332
A
B

REVISIONS

REV	DESCRIPTION	DATE	APPROVED
A	RELEASE PER ECO 94-0434	6-30-94	B.M.Miner
B	REVISE PER ECO 94-0435	6-30-94	B.M.Miner

UNLESS OTHERWISE SPECIFIED	SIGNATURES		DATE
DIMENSIONS ARE IN INCHES TOLERANCES ON: 2 PL. DECIMALS ± 3 PL. DECIMALS ± ANGLES ± FRACTIONS ±	DRAWN:	E. JORY	7/22/93
	PROJ.ENG.:	M. SPANGLER	8/27/93
	ENG.MGR.:	R. MELROSE	8/27/93
	PROD.:	Jerry Thomas	7-5-94
	Q.A.:	[illegible]	7-5-94
THIS DRAWING AND SPECIFICATION HEREIN ARE THE PROPERTY OF VMIC AND SHALL NOT BE REPRODUCED OR COPIED OR USED IN WHOLE OR IN PART AS A BASIS FOR THE MANUFACTURE OR SALE OF ITEMS WITHOUT WRITTEN PERMISSION.	MAGNETIC MEDIA FILENAME FOR PACKAGE: A004140B.EXE		

VMIC. HUNTSVILLE, ALABAMA 35803-3308
VME MICROSYSTEMS INTERNATIONAL CORPORATION

ASSEMBLY DRAWING
VMIVME-4140

SIZE	FSCM NO.	DWG NO.
A	0BPH5	132-004140-000

SCALE		SHEET
NONE		1 OF 10

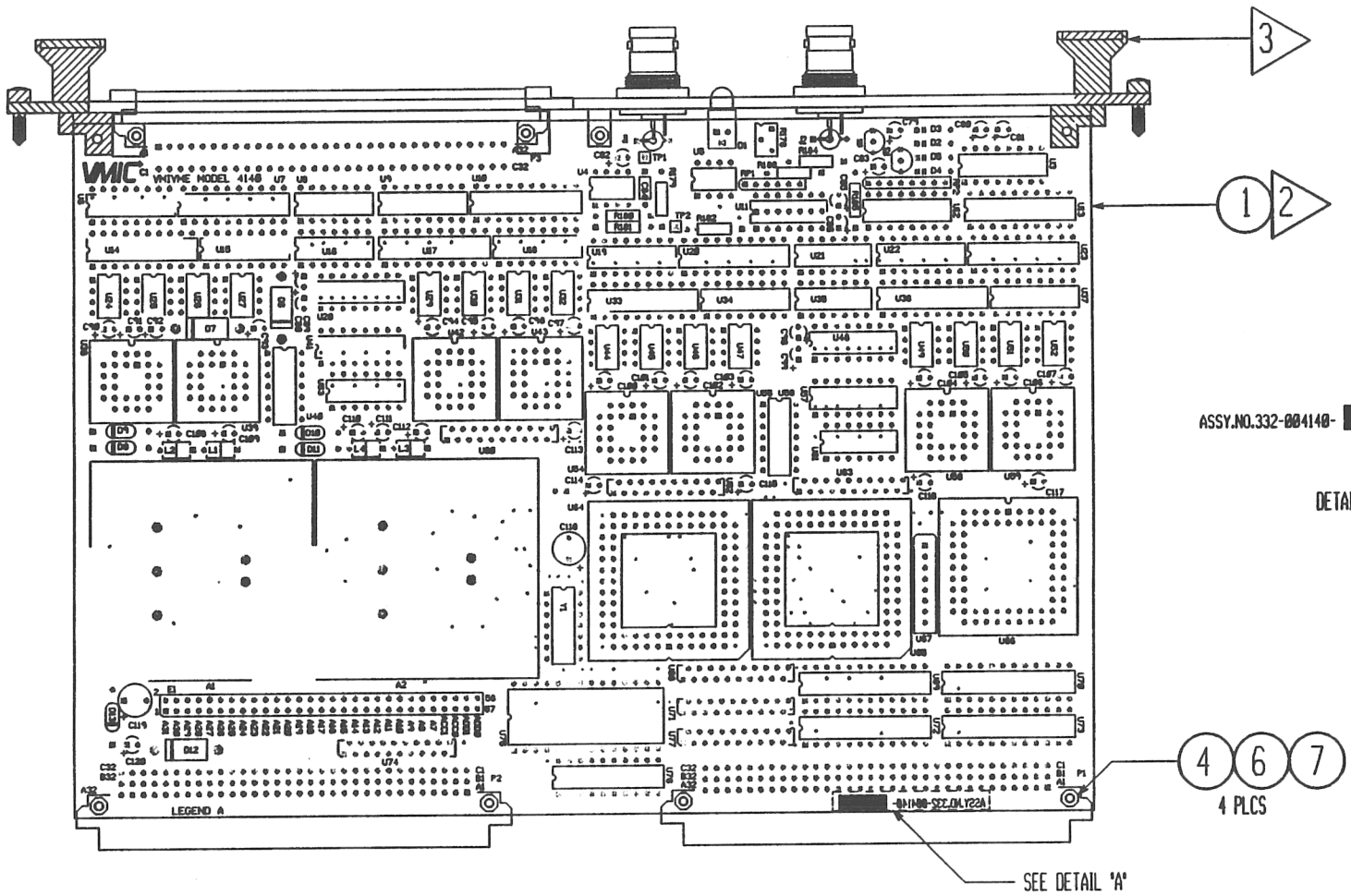

VMIC VME Microsystems International Corporation, Huntsville, Alabama 35803-3308	SIZE B	FORM NO. 0BPH5	DWG NO. 132-004140-000
DRAWN D.CAMPBELL	SCALE NONE		SHEET 2
CHECKED C. Muzzey 6-24-97			

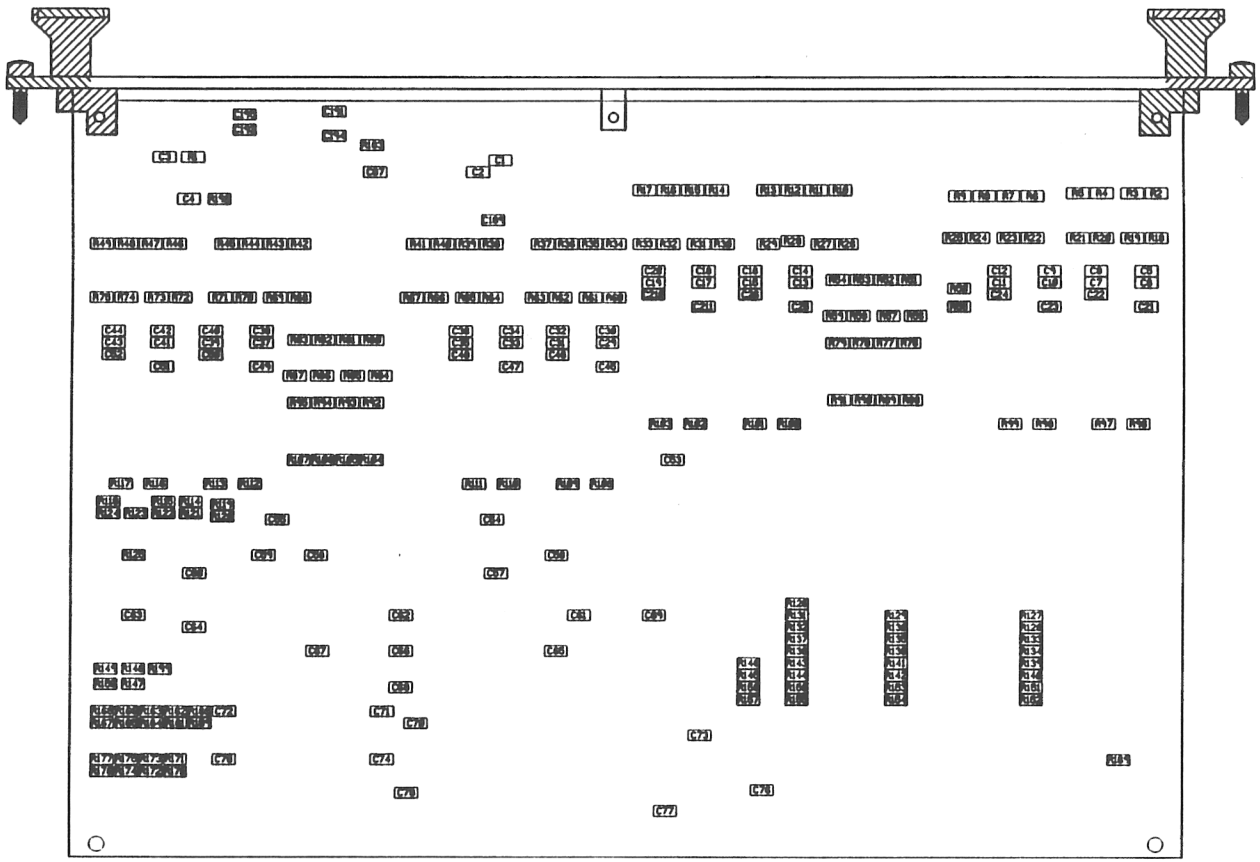

VMIC Huntsville, Alabama 35803-3308 VME Microsystems International Corporation	SIZE B	FORM NO. 0BFH5	DWG NO. 132-004140-000
DRAWN D. CAMPBELL			
CHECKED C. Muzzey 6-24-94	SCALE NONE		SHEET 2A

SIZE B | DWG NO 132-004140-000 | SHT 2A | REV

REWORK LEGEND:

A. REWORK INSTRUCTIONS SHALL BE ACCOMPLISHED ON THE COPPER REVISION(S) INDICATED AND WILL BECOME A PART OF THE ASSEMBLED BOARD.

B. REWORK INSTRUCTION SYMBOLS:

1. PIN ONE DOT ■
2. DRILL HOLE ●
3. DISCONNECT TRACE ×
4. TRACE ON INTERNAL LAYER ------
5. TRACE ON EXTERNAL LAYER ———

INSTRUCTIONS:

NOTES:

1 A. ALL ASSEMBLED BOARDS SHALL BE IDENTIFIED WITH THE ASSEMBLED BOARD PART NUMBER. THIS NUMBER INCLUDES THE CURRENT REVISION LETTER LISTED IN THE "REVISION STATUS OF 332" BLOCK (SEE SHEET 1). THE RESULTING PART SHALL BECOME A 332-004140-ABC (REV).

B. THE PART NUMBER FIELDS "ABC" WILL COINCIDE WITH THE OPTIONAL PARTS INSTALLED IN THE COMPLETED ASSEMBLY. IF NO OPTIONAL PARTS ARE USED IN A FIELD, THAT FIELD WILL DEFAULT TO "0".

C. IF NECESSARY, REMOVE AND REPLACE 332 REVISION LETTER WITH CURRENT REVISION LETTER USING A REMOVABLE NON-SMEARING BLACK INK.

2 SOLDER COMPOSITION COMPLIES WITH MIL-STD-2000.

3 SEE DRAWING 150-000022-000 FOR THE ASSEMBLY AND INSTALLATION OF THE FRONT PANEL.

OPT. A	OPT. B	OPT. C	QUANTITY	ITEM #	REFERENCE DESIGNATOR	PART NO.	NOMENCLATURE OR DESCRIPTION	MANUFACTURER'S PART NO.
			1	1		333-004140-000	BOARD: PC, RAW, 8 LAYERS	
			1	2		317-000163-000	PANEL: 6U X 1, EXTRUDED EJECTOR, 1 64 PIN CUTOUT BOARD MOUNT FAIL LED (SEE NOTE 3)	
			1	3		324-004140-100	LABEL: ID, 4140, FRONT PANEL (SEE NOTE 3)	
			4	4	P1,2	328-250000-010	SCREW: METRIC, 2.5 X 10MM, SS	
			2	5	P3	328-250000-012	SCREW: PAN HEAD, METRIC, 2.5 X 12MM, SS	
			6	6	P1-3	328-250001-025	NUT: METRIC, 2.5MM, HEX, SS	
			A/R	7	REF. P1-3	316-000002-000	LOCTITE: SMALL SCREW THREADLOCKER 222	
			1	8	U69	303-001019-000	PROGRAMMED PAL: FILE: 4140-69A.JED A PROGRAMMED 20R4-7PC (331-300105-600)	
			1	9	U72	303-001020-000	PROGRAMMED PAL: FILE: 4140-72A.JED A PROGRAMMED 20R4-7PC (331-300105-600)	
			1	10	U65	303-001021-000	PROGRAMMED PAL: FILE: 4140-65A.POF A PROGRAMMED EPM7128LC84-3 (331-300153-015)	
			1	11	U64	303-001022-000	PROGRAMMED PAL: FILE: 4140-64A.POF A PROGRAMMED EPM7128LC84-3 (331-300153-015)	
			3	12	U11,40,53	311-000001-301	AMP: OPERATIONAL, +-30V, 300uV, 500mW, PLASTIC DIP	OP-400GP (PMI)
			1	13	U4	311-000017-100	REFERENCE, VOLTAGE: 40V INPUT, 10, 7.5, 5, OR 2.5V OUTPUT, PLASTIC DIP	AD584KH (ANALOG DEVICES)
			8	14	U24-27,29-32	311-000038-101	AMP: OPERATIONAL, HIGH SPEED, LOW POWER DUAL,+-18V	TLE2142(CP,IP,MP,MJG) (T.I.)
			1	15	U5	311-000044-000	AMP: OPERATIONAL, DUAL, +/-22V, LOW DRIFT, 8-PIN DIP	LT1124(C,AC)(N,J)8 (LIN.TECH.)

VMIC® PARTS LIST
VME MICROSYSTEMS INT'L CORP.

CODE	REV.	DRAWING NUMBER	CHECKED	SH NO.
OBPH5	B	132-004140-000	C. Murphy	4
			DATE 6/24/94	

F0086-90

OPT.			QUANTITY	ITEM #	REFERENCE DESIGNATOR	PART NO.	NOMENCLATURE OR DESCRIPTION	MANUFACTURER'S PART NO.
A	B	C						
			1	16	C84	315-005002-104	CAP: .1uF, .300 LEAD SPACE, 10%, 50V, X7R, CERAMIC MOLDED	CW80C104KM (PHILLIPS)
			2	17	C118,119	315-101000-476	CAP: 47uF, .200 LEAD SPACE, 10%, 10V, TANTALUM	T35(2,3,6)H476K010AS (KEMET)
			22	18	C79-83,85,86,88-97 C108,113,114,117,120	315-102001-225	CAP: 2.2uF, .100 LEAD SPACE, 20%, 25V, TANTALUM	T35(0,1)B225M025AS (KEMET)
			1	19	C87	315-305000-103	CAP: CERAMIC CHIP, .01uF, 50V, 10%, X7R, EIA 1206 TAPE & REEL	C1206C103K5RAC (KEMET)
			18	20	C5-7,9-11,13-15 C17-19,22,24,26 C191,193,210	315-305000-102	CAP: CERAMIC CHIP, 0.001uF, 10%, 50V, X7R EIA 1206	C1206C102K5RAC (KEMET)
			39	21	C1,3,4,8,12,20,21,23 C25,53-78,189,194 C195,211	315-305000-104	CAP: CERAMIC CHIP, 0.1uF, 10%, 50V, X7R EIA 1206	C1206C104K5RAC (KEMET)
			2	22	L1,2	318-000001-000	FERRITE: 35Z @ 25MHz, .130 X .118	2673000101 (FAIR-RITE PROD)
			1	23	P3	321-000011-200	CONNECTOR: DIN, 64 PIN, WAVE SOLDER, ANGLED, TYPE C, MALE	100-964-033 (PANDUIT)
			27	24	E1	321-000015-001	JUMPER: PC BOARD, 2 POSITION, FEMALE, GOLD PLATED CONTACT, BLACK	MSB-2360-G-C-STP (McKENZIE)
			2	25	TP1,2	321-000016-011	TERMINAL: PC BOARD, SINGLE ROW, .025 THICK, GOLD PLATED, ONE POST	92983401-01 (PANDUIT)
			29	26	E1	321-000017-011	TERMINAL: PC BOARD, DUAL ROW, .025 THICK, GOLD PLATED, ONE POST	PEG02DS-(T,F)BR (CRANE)
			1	27	P3	321-000048-003	BRACKET: MULTIPLE FIXING, MALE CONNECTOR FOR 19", LEFT	09 02 000 9919 (HARTING)
			1	28	P3	321-000048-004	BRACKET: MULTIPLE FIXING, MALE CONNECTOR FOR 19", RIGHT	09 02 000 9920 (HARTING)

VMIC® PARTS LIST
VME MICROSYSTEMS INT'L CORP.

CODE	REV.	DRAWING NUMBER	CHECKED	SH NO.
OBPH5	B	132-004140-000	C. Muggy	5
			DATE 6/23/94	

F0086-90

OPT. A	OPT. B	OPT. C	QUANTITY	ITEM #	REFERENCE DESIGNATOR	PART NO.	NOMENCLATURE OR DESCRIPTION	MANUFACTURER'S PART NO.
			1	29	P1	321-000054-001	CONNECTOR: DIN, 96 PIN WITH EXTENDED GROUND PINS, TYPE C	536437-6 (AMP)
			1	30	P2	321-000054-002	CONNECTOR: DIN, 96 PIN WITH EXTENDED GROUND PINS, TYPE C	536437-5 (AMP)
			4	31	U38,39,42,43	321-000062-028	CARRIER: CHIP, 28 PIN PLCC	821581-1 (PREFERRED) (AMP)
			1	32	U66	321-000062-068	CARRIER: CHIP, 68 PIN PLCC	821574-1 (AMP)
			2	33	U64,65	321-000062-084	CARRIER: CHIP, 84 PIN PLCC	821573-1 (AMP)
			2	34	J1,2	321-000071-000	JACK: BNC, REAR MOUNT, INSULATED BULKHEAD	BJ21 (TROMPETER'S)
			2	35	U69,72	321-001324-001	SOCKET: DIP, 24 PIN, .300 ROW, STAMPED & FORMED	2-641932-(3,1,5) (AMP)
			1	36	Y1	323-000007-400	OSCILLATOR: TTL, HIGH SPEED CMOS, +-100ppm, 5Vdc, 40.0 MHz, -10 TO 70 DEGREES C ,	P5C-KT-40MHZ (FOX)
			4	37	U38,39,42,43	323-250040-100	CONVERTER: DIGITAL TO ANALOG, QUAD 12 BIT, 28 PIN, PLCC	DAC-8413-FPC (A/D)
			1	38	U67	323-500002-040	DELAY LINE: DIGITAL, TTL, 5 TAP, 8 PIN SIL, 40ns	DDU-222-40 (DATA DELAY)
			4	39	U60,62,63,68	331-304244-133	IC: DIGITAL, OCTAL BUFFER/LINE DRIVER, TRI-STATE, NON-INVERTING, ZIP PACKAGE	QS74FCT244ATZ (QUALITY SEMI)
			1	40	U76	331-304244-400	IC: DIGITAL, OCTAL BUS DRIVER, NON-INVERTING, FAST, PLASTIC DIP	SN74F244N (TI)
			3	41	U71,74,77	331-304521-303	IC: DIGITAL, 8 BIT COMPARATOR, FAST, ZIP PACKAGE	QS74FCT521TZ (QUALITY SEMI)
			2	42	U70,73	331-304646-400	IC: DIGITAL, TRI-STATE OCTAL BUS TRANSCEIVER AND REGISTER, PLASTIC DIP	SN74F646N (TI
			4	43	U6,9,15,18	331-309006-001	IC: INTERFACE, 36V, +-4V DIGITAL INPUT, +-2V ANALOG INPUT, CERAMIC DIP	HI1-201HS-5 (HARRIS)

VMIC® **PARTS LIST**

VME MICROSYSTEMS INT'L CORP.

CODE	REV.	DRAWING NUMBER	CHECKED	SH NO.
OBPH5	B	132-004140-000	C. Muggeo	6
			DATE 6/23/94	

F0086-90

OPT. A	OPT. B	OPT. C	QUANTITY	ITEM #	REFERENCE DESIGNATOR	PART NO.	NOMENCLATURE OR DESCRIPTION	MANUFACTURER'S PART NO.
				44		DELETED		
			1	45	U2	331-309047-125	IC: VOLTAGE REGULATOR, 12V, TO-92 PACKAGE	LM79L12ACZ (NATIONAL)
			5	46	U7,10,13,14,17	331-309057-001	IC: SWITCH, QUAD SPDT, 20-PIN P-DIP (.300)	MAX333(_,A)(C,E)PP (MAXIM)
			1	47	U1	331-309111-120	IC: VOLTAGE REGULATOR, 12 VOLTS, 100mA OUPUT, POSITIVE, INTERNAL SHORT CIRCUIT	LM78L12ACZ (NATIONAL)
			1	48	U3	331-309128-001	IC: CONVERTER, A/D, SAMPLING, 16-BIT, 100KSPS	AD677(KN,KD,BD) (A/D)
			3	49	U12,28,41	331-309131-000	IC: MUX, CMOS ANALOG, 8 CHANNEL, 16 PIN DIP	DG408(DJ,AK) (SILICONIX)
			1	50	U66	331-309132-000	IC: DSP MICROCOMPUTER, 68 PIN PLCC	ADSP-2105(K,B)P-40 (A/D)
			1	51	D1	337-000002-211	DIODE: LED, RED, 5V, 12mA, CURRENT-LIMITING RESISTOR, RIGHT ANGLE PCB MOUNT	5302H1-5V (IDI)
			2	52	U8,16	337-000004-001	DIODE: ARRAY, MONOLYTHIC, 60V, 500mA, 14 PIN DIP	FSA2501(M/P) (FAIRCHILD)
			1	53	A1	340-000027-105	CONVERTER: DC/DC, 5VDC, 3580mA FULL CURRENT, +-400mA OUTPUT, 67% EFFICIENCY @ FL	1215D5H (CDI)
			2	54	D6,7	343-106274-001	SUPPRESSOR: TRANSIENT VOLTAGE, 13V, AXIAL	1N6274A
			1	55	R179	347-000008-499	RESISTOR: 499K OHM, 1/4W, 1%, METAL FILM	
			2	56	R180,185	347-000014-200	RESISTOR: 20K OHM, 1/8W, 1%, 50PPM, METAL FILM RN50C TYPE	
			1	57	R181	347-000017-100	RESISTOR: 1K OHM, 1/8W, 1%, 50PPM, METAL FILM RN50C TYPE	
			2	58	R182,184	347-000019-499	RESISTOR: 49.9 OHM, 1/8W, 1%, METAL FILM	
			34	59	R6-9,14-21,26-29 R50-59,76-79,88-91	347-000021-102	RESISTOR: CHIP, 1K OHM, 1/8W, 5%, EIA SIZE 1206	CRCW1206102JRT2 (DALE)

VMIC® PARTS LIST
VME MICROSYSTEMS INT'L CORP.

CODE OBPH5 | REV. B | DRAWING NUMBER 132-004140-000 | CHECKED C. Murgas | DATE 6/23/94 | SH NO. 7

OPT. A	OPT. B	OPT. C	QUANTITY	ITEM #	REFERENCE DESIGNATOR	PART NO.	NOMENCLATURE OR DESCRIPTION	MANUFACTURER'S PART NO.
			81	60	R1,96-103,108-168 R170-177,183,190,199	347-000021-392	RESISTOR: CHIP, 3.9K OHM, 1/8W, 5%, +- 200PPM	CRCW1206392JRT2 (DALE)
			16	61	R2-5,10-13,22-25 R30-33	347-000021-560	RESISTOR: CHIP, 56 OHM, 1/8W, 5%, +- 200PPM	CRCW1206560JRT2 (DALE)
			1	62	RP2	347-001033-102	SIP: 1K OHM, ISOLATED, 8 PIN, LOW PROFILE, .025% RATIO MATCHED	PN329 (VISHAY/OHMTEK)
			1	63	RP1	347-001031-000	SIP: 10K OHM, PRECISION NETWORK, 6 PIN	PN286 (VISHAY)
			1	64	R178	347-500007-203	POT: TRIMMER, 20K OHM, MULTI-TURN, SIDE ADJUST	3266X-1-203 (BOURNS)
			4	65	D2-5	348-000007-000	DIODE: SCHOTTKY BARRIER, 150mW, 1pF, AXIAL	5082-2835 (HEWLETT PACKARD)
			1	66	D12	348-100752-000	DIODE: ZENER, 5.6V, +-20%	1N752
			3	67	D8,9,13	348-105817-000	RECTIFIER: SILICON, 1 AMP, 20 VOLT, SCHOTTKY BARRIER, AXIAL	1N5817 (MOTOROLA)
			1	68	R188	347-000012-357	RESISTOR: 357K OHM, 1/8W, 1%, 50PPM, METAL FILM RN50C TYPE	
			1	69	R169	347-000021-203	RESISTOR: CHIP, 20K OHM, 1/8W, 5%, +- 200PPM	CRCW1206203JRT2 (DALE)
0	0	0	1	70	U75	306-001023-002	PROGRAMMED PAL: FILE: 01023002.MX A PROGRAMMED 27C256-25 (331-309061-000)	
0	0	0	2	71	U56,61	311-000001-301	AMP: OPERATIONAL, +-30V, 300uV, 500mW, PLASTIC DIP	OP-400GP (PMI)
0	0	0	8	72	U44-47,49-52	311-000038-101	AMP: OPERATIONAL, HIGH SPEED, LOW POWER DUAL,+-18V	TLE2142(CP,IP,MP,MJG) (T.I.)
0	0	0	16	73	C98-107,109-112 C115,116	315-102001-225	CAP: 2.2uF, .100 LEAD SPACE, 20%, 25V, TANTALUM	T35(0,1)B225M025AS (KEMET)
0	0	0	16	74	C29-31,33-35,37-39 C41-43,46,48,50,52	315-305000-102	CAP: CERAMIC CHIP, 0.001uF, 10%, 50V, X7R EIA 1206	C1206C102K5RAC (KEMET)

VMIC® PARTS LIST

VME MICROSYSTEMS INT'L CORP.

CODE	REV.	DRAWING NUMBER	CHECKED	SH NO.
OBPH5	B	132-004140-000	C. Muggey	8
			DATE 6/23/94	

F0086-90

OPT. A	OPT. B	OPT. C	QUANTITY	ITEM #	REFERENCE DESIGNATOR	PART NO.	NOMENCLATURE OR DESCRIPTION	MANUFACTURER'S PART NO.
0	0	0	10	75	C2,16,32,36,40,44 C45,47,49,51	315-305000-104	CAP: CERAMIC CHIP, 0.1uF, 10%, 50V, X7R EIA 1206	C1206C104K5RAC (KEMET)
0	0	0	2	76	L3,4	318-000001-000	FERRITE: 35Z @ 25MHz, .130 X .118	2673000101 (FAIR-RITE PROD)
0	0	0	4	77	U54,55,58,59	321-000062-028	CARRIER: CHIP, 28 PIN PLCC	821581-1 (PREFERRED) (AMP)
0	0	0	1	78	U75	321-001628-001	SOCKET: DIP, 28 PIN, .600 ROW, STAMPED & FORMED	2-641605-(3,1,5) (AMP)
0	0	0	4	79	U54,55,58,59	323-250040-100	CONVERTER: DIGITAL TO ANALOG, QUAD 12 BIT, 28 PIN, PLCC	DAC-8413-FPC (A/D)
0	0	0	4	80	U19,22,34,37	331-309006-001	IC: INTERFACE, 36V, +-4V DIGITAL INPUT, +-2V ANALOG INPUT, CERAMIC DIP	HI1-201HS-5 (HARRIS)
0	0	0	4	81	U20,23,33,36	331-309057-001	IC: SWITCH, QUAD SPDT, 20-PIN P-DIP (.300)	MAX333(_,A)(C,E)PP (MAXIM)
0	0	0	2	82	U48,57	331-309131-000	IC: MUX, CMOS ANALOG, 8 CHANNEL, 16 PIN DIP	DG408(DJ,AK) (SILICONIX)
0	0	0	2	83	U21,35	337-000004-001	DIODE: ARRAY, MONOLYTHIC, 60V, 500mA, 14 PIN DIP	FSA2501(M/P) (FAIRCHILD)
0	0	0	1	84	A2	340-000027-105	CONVERTER: DC/DC, 5VDC, 3580mA FULL CURRENT, +-400mA OUTPUT, 67% EFFICIENCY @ FL	1215D5H (CDI)
0	0	0	32	85	R38-41,46-49,60-63 R68-71,80-87,92-95 R104-107	347-000021-102	RESISTOR: CHIP, 1K OHM, 1/8W, 5%, EIA SIZE 1206	CRCW1206102JRT2 (DALE)
0	0	0	16	86	R34-37,42-45,64-67 R72-75	347-000021-560	RESISTOR: CHIP, 56 OHM, 1/8W, 5%, +- 200PPM	CRCW1206560JRT2 (DALE)
0	0	0	2	87	D10,11	348-105817-000	RECTIFIER: SILICON, 1 AMP, 20 VOLT, SCHOTTKY BARRIER, AXIAL	1N5817 (MOTOROLA)
0	0	1	1	88	U75	306-001140-000	PROGRAMMED PAL: FILE: 01140000.MX A PROGRAMMED 27C256-25 (331-309061-000)	
0	0	1	2	89	C2,16	315-305000-104	CAP: CERAMIC CHIP, 0.1uF, 10%, 50V, X7R EIA 1206	C1206C104K5RAC (KEMET)

VMIC® PARTS LIST
VME MICROSYSTEMS INT'L CORP.

CODE	REV.	DRAWING NUMBER	CHECKED	SH NO.
OBPH5	B	132-004140-000	C. Muggy	9
			DATE 6/23/94	

OPT. A	OPT. B	OPT. C	QUANTITY	ITEM #	REFERENCE DESIGNATOR	PART NO.	NOMENCLATURE OR DESCRIPTION	MANUFACTURER'S PART NO.
0	0	1	1	90	U75	321-001628-001	SOCKET: DIP, 28 PIN, .600 ROW, STAMPED & FORMED	2-641605-(3,1,5) (AMP)

VMIC® **PARTS LIST**

VME MICROSYSTEMS INT'L CORP.

CODE	REV.	DRAWING NUMBER	CHECKED	SH NO.
OBPH5	B	132-004140-000	C. Mussler	10
			DATE 6/23/94	

F0086-90