REVISIONS			
REV	DESCRIPTION	DATE	APPROVAL
A	RELEASE PER ECO 93-0587	5-9-93	[illegible]

NOTES:

1. ALL RESISTOR VALUES ARE IN OHMS.
2. UNLESS OTHERWISE SPECIFIED:
   A. ALL RESISTORS ARE 1/4 WATT, 5%.
   B. ALL CAPACITOR VALUES ARE SHOWN IN MICROFARADS

	SIGNATURES	DATE
DRAWN	DAVID SMITH	3/13/92
PROJ. ENG.	R. MELROSE	11/9/92
ENG. MGR.	R. MELROSE	11/9/92
PROD.	[illegible]	8-11-93
Q.A.	[illegible]	8-11-93

THIS DRAWING AND SPECIFICATION HEREIN ARE THE PROPERTY OF VMIC AND SHALL NOT BE REPRODUCED OR COPIED OR USED IN WHOLE OR IN PART AS A BASIS FOR THE MANUFACTURE OR SALE OF ITEMS WITHOUT WRITTEN PERMISSION.

VMIC Huntsville, Alabama 35803-3308
VME Microsystems International Corporation

TITLE: VMIVME - 4150 SCHEMATIC

SIZE	FORM NO.	DWG NO.
B	0BPH5	141-004150-000

SCALE: NONE | SHEET: 1

SCHEMATIC NAME: [illegible] SHEET NUMBER: 1 DATE: [illegible] 29, 1993

141-004150-000 SHT. 1 REV. A

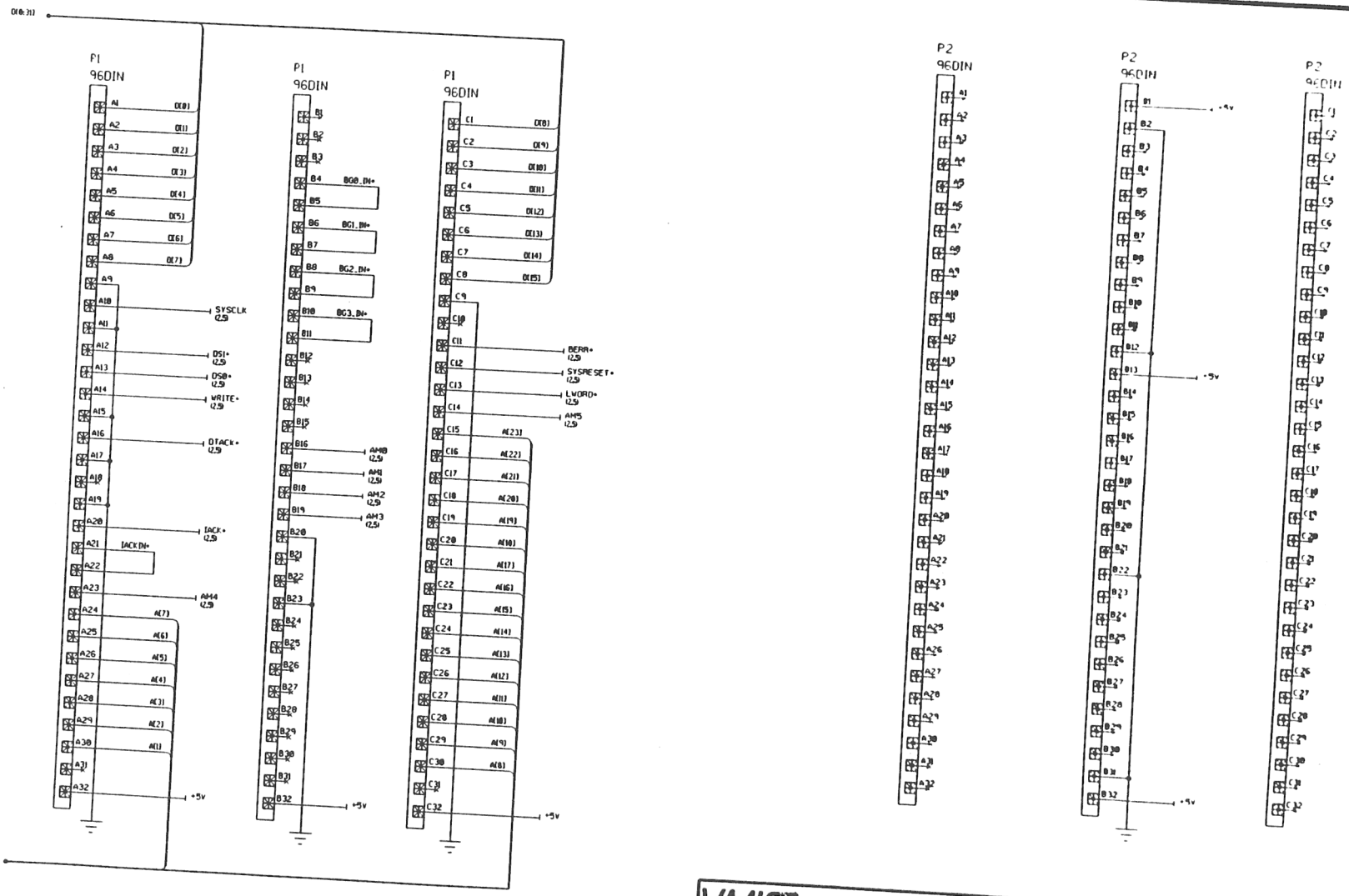

VMIC
VME Microsystems International Corporation
Huntsville, Alabama 35803-3308

DRAWN D. SMITH	SIZE B	FORM NO. 0BPH5	DWG NO. 141-004150-000
CHECKED C. Mussey 7-27-93	SCALE NONE		SHEET 2

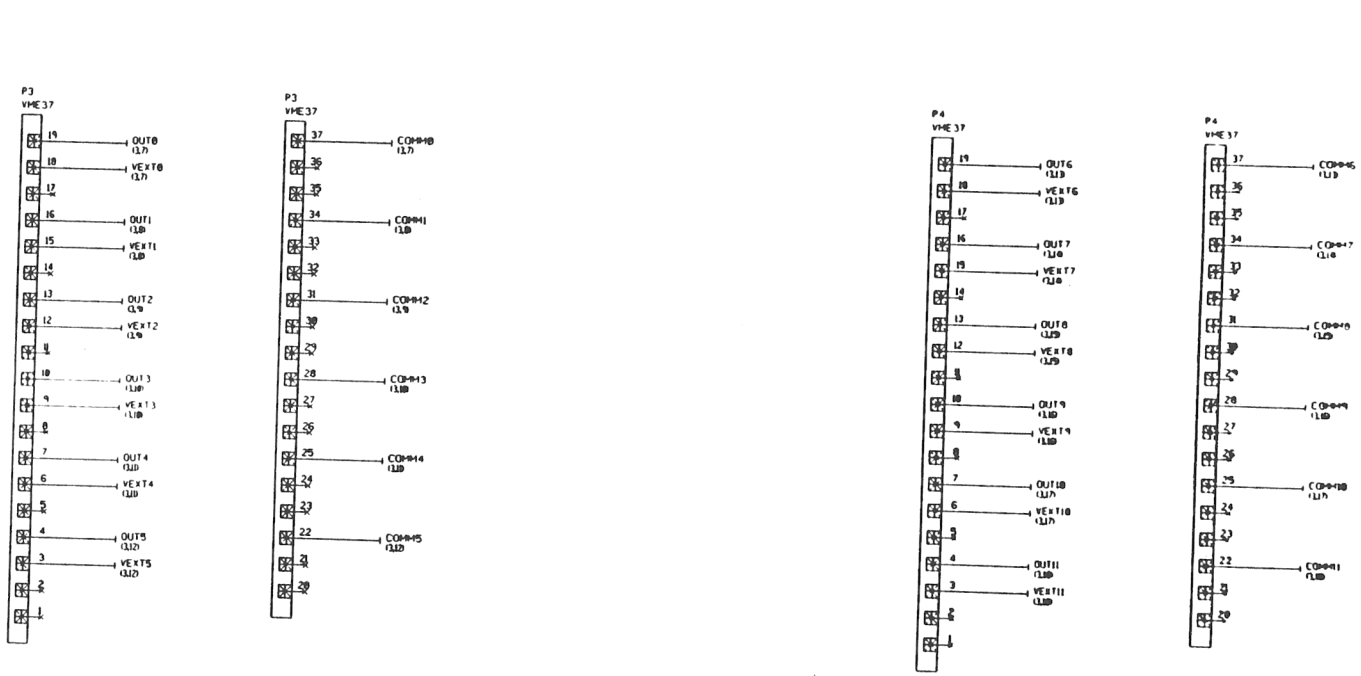

VMIC
Huntsville, Alabama 35803-3308
VME Microsystems International Corporation

DRAWN D. SMITH	SIZE B	FORM NO. 0BPH5	DWG NO. 141-004150-000
CHECKED C. Murphy 7-29-93	SCALE NONE		SHEET 3

SCHEMATIC NAME: 0000 SHEET NUMBER: 3 DATE: JUL 29, 1993

DATA TRANSCEIVERS

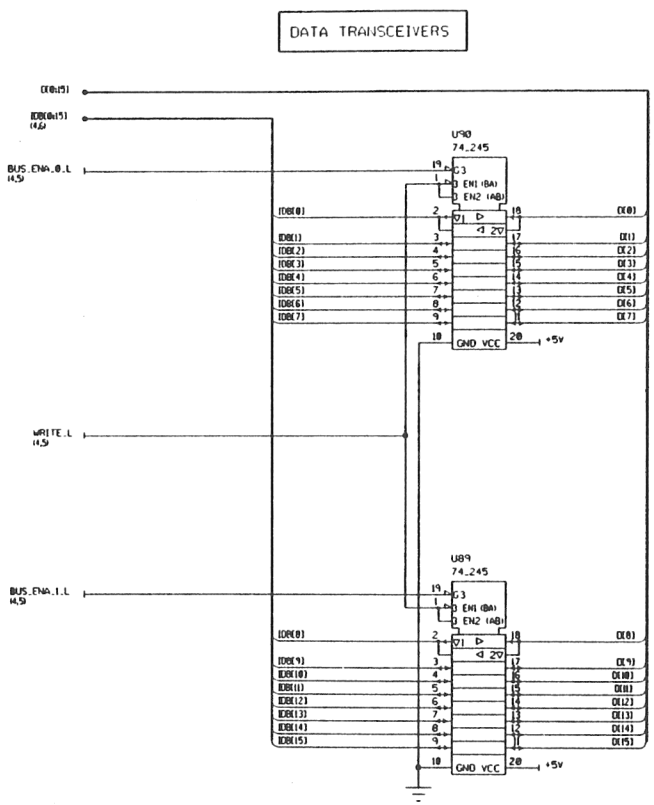

ADDRESS SELECT

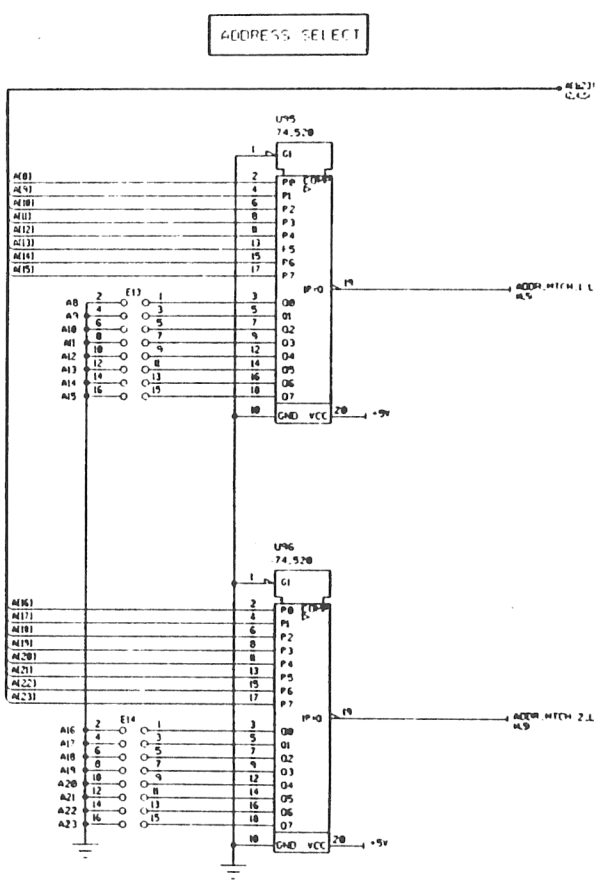

VMIC Huntsville, Alabama 35803-3308 VME Microsystems International Corporation	SIZE B	FORM NO. 0BPH5	DWG NO. 141-004150-000
DRAWN D. SMITH			
CHECKED C. Mugler 7-29-93	SCALE NONE		SHEET 4

141-004150-000 4 A

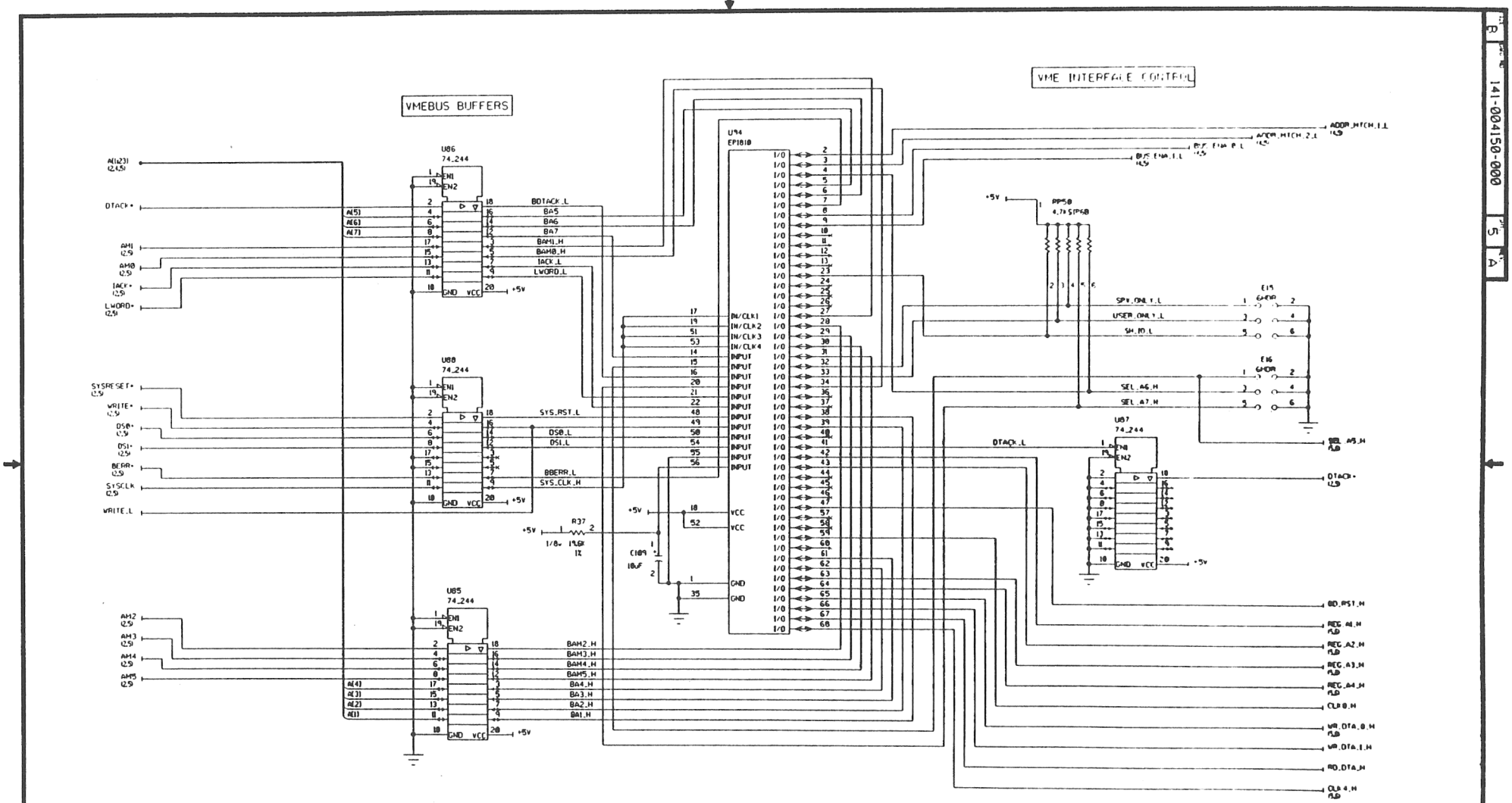

VMIC Huntsville, Alabama 35803-3308 VME Microsystems International Corporation	SIZE B	FORM NO. 0BPH5	DWG NO. 141-004150-000
DRAWN D. SMITH			
CHECKED C. Murphy 7-29-93	SCALE NONE		SHEET 5

141-004150-000 | 5 | A

SCHEMATIC NAME: page SHEET NUMBER: 5 DATE: Jul 29, 1993

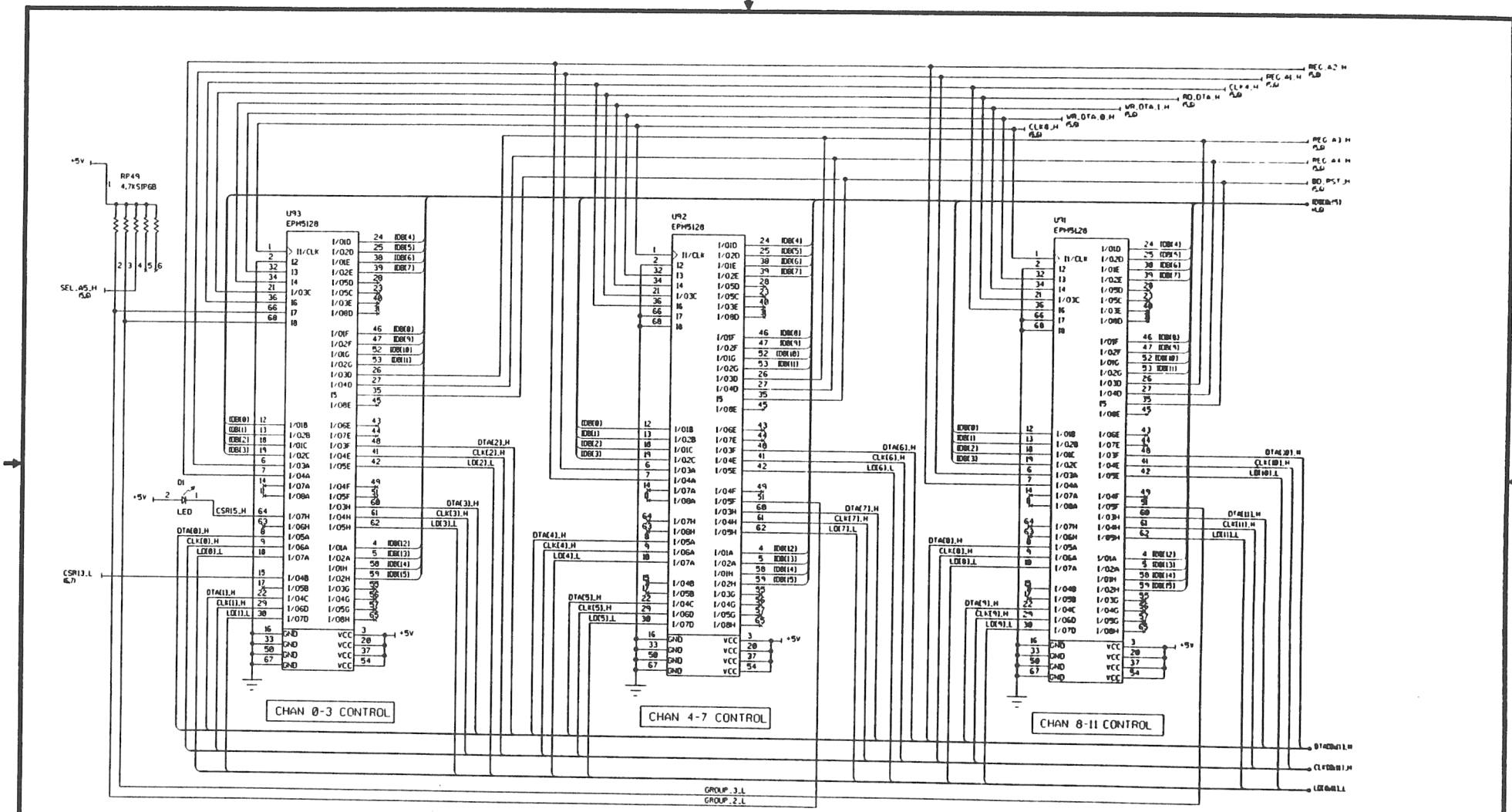

VMIC
Huntsville, Alabama 35803-3308
VME Microsystems International Corporation

DRAWN: D. SMITH	SIZE: B	TOPM NO.: 0BPH5	DWG NO.: 141-004150-000
CHECKED: C. Musser 7-29-93	SCALE: NONE		SHEET: 6

SCHEMATIC NAME: [illegible] SHEET NUMBER: 6 DATE: JUL 29, 1993

141-004150-000

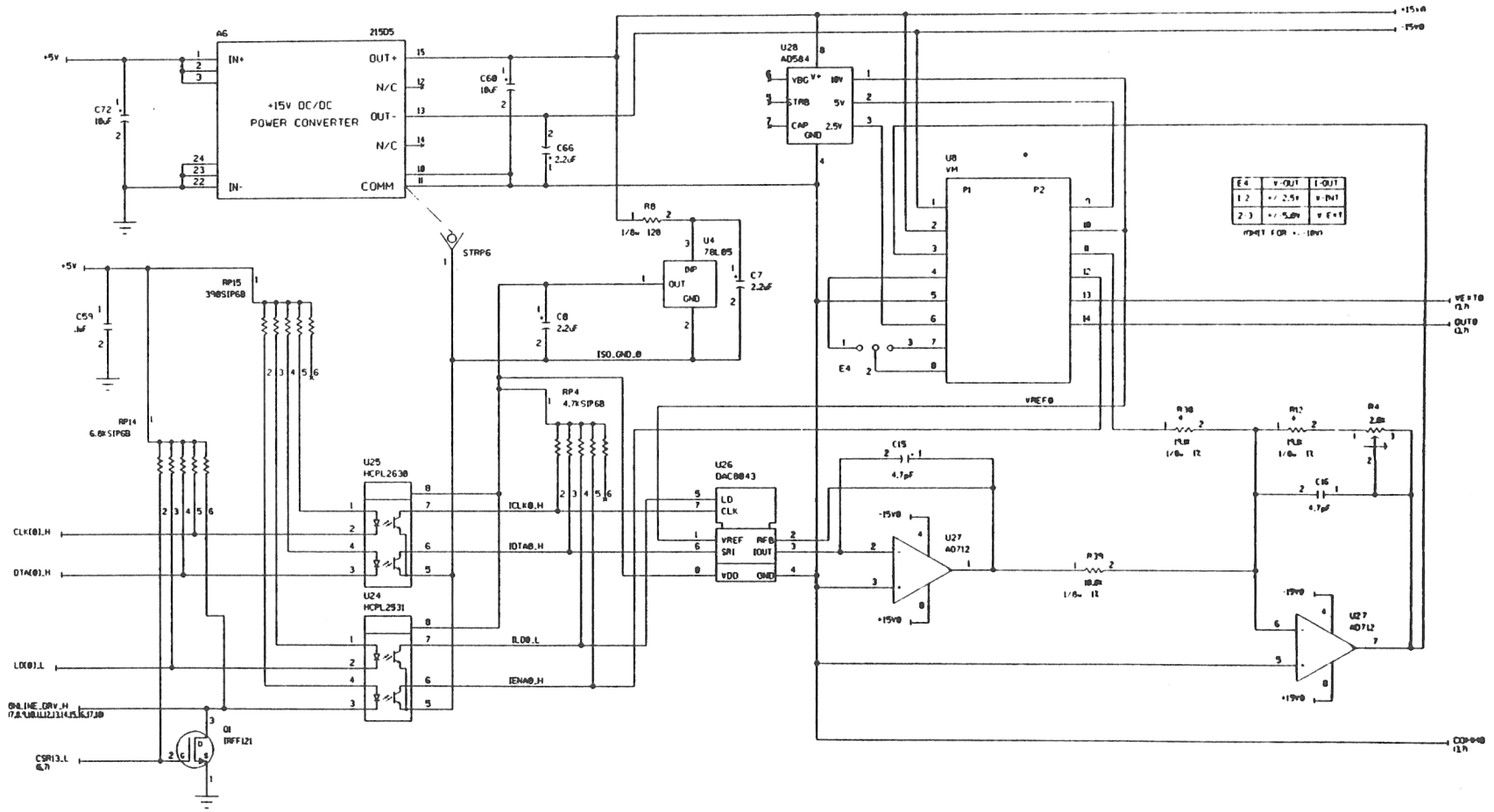

E4	V-OUT	I-OUT
1-2	+/-2.5V	V-INT
2-3	+/-5.0V	V-EXT

(OMIT FOR +/-10V)

* THIS PART IS OPTION DEPENDENT. REFER TO SEPARATE PARTS LIST FOR APPLICATION AND VALUE.

OUTPUT CHANNEL 0

VMIC Huntsville, Alabama 35803-3308 VME Microsystems International Corporation	SIZE B	FORM NO. 0BPH5	DWG NO. 141-004150-000
DRAWN: D. SMITH			
CHECKED: C. Murphy 7-29-93	SCALE NONE		SHEET 7

SCHEMATIC NAME: page SHEET NUMBER: 7 DATE: Jul 29, 1993

141-004150-000 7 A

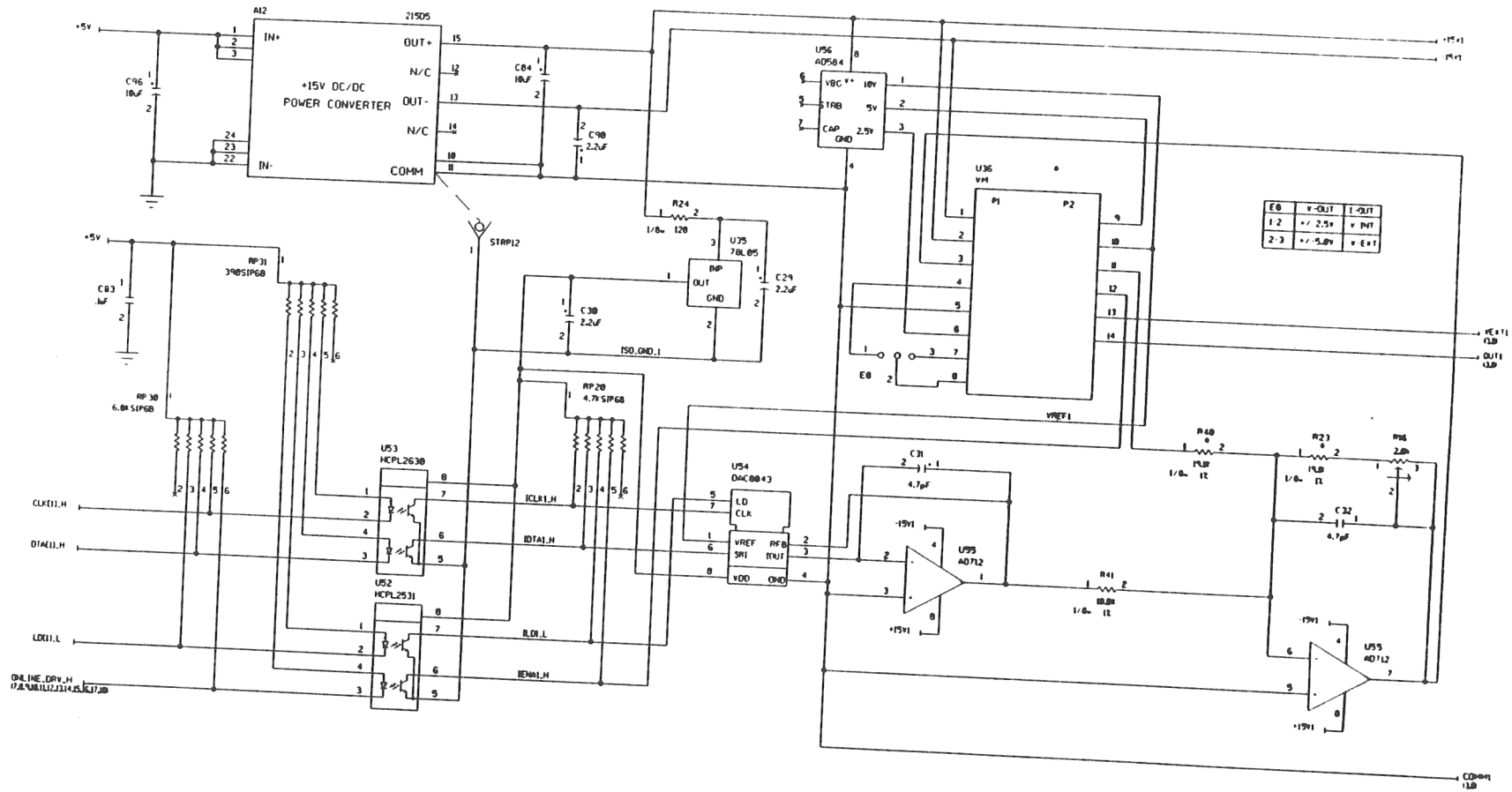

E0	V-OUT	I-OUT
1-2	+/- 2.5V	V INT
2-3	+/- 5.0V	V EXT

* THIS PART IS OPTION DEPENDENT. REFER TO SEPARATE PARTS LIST FOR APPLICATION AND VALUE.

VMIC Huntsville, Alabama 35803-3308
VME Microsystems International Corporation

DRAWN: D. SMITH
CHECKED: C. Murphy 7-29-93

SIZE: B
FSCM NO.: 0BPH5
DWG NO.: 141-004150-000
OUTPUT CHANNEL 1
SCALE: NONE
SHEET 8

SCHEMATIC NAME: 0000 SHEET NUMBER: 8 DATE: Jul 29, 1993

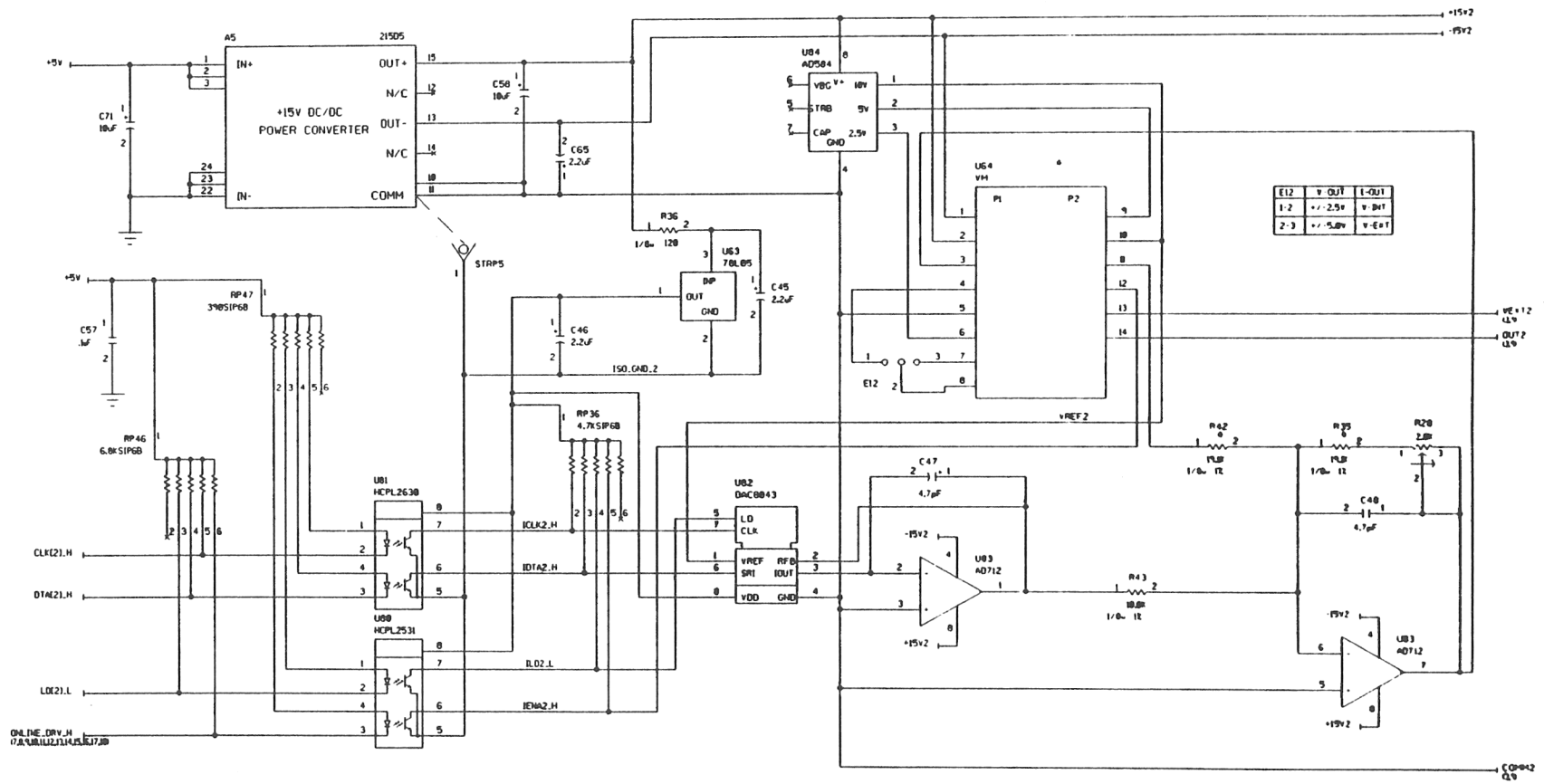

* THIS PART IS OPTION DEPENDENT. REFER TO SEPARATE PARTS LIST FOR APPLICATION AND VALUE.

OUTPUT CHANNEL 2

VMIC Huntsville, Alabama 35803-3308
VME Microsystems International Corporation

DRAWN D. SMITH	SIZE B	FORM NO. 0BPH5	DWG NO. 141-004150-000
CHECKED C. Musgrove 7-29-93	SCALE NONE		SHEET 9

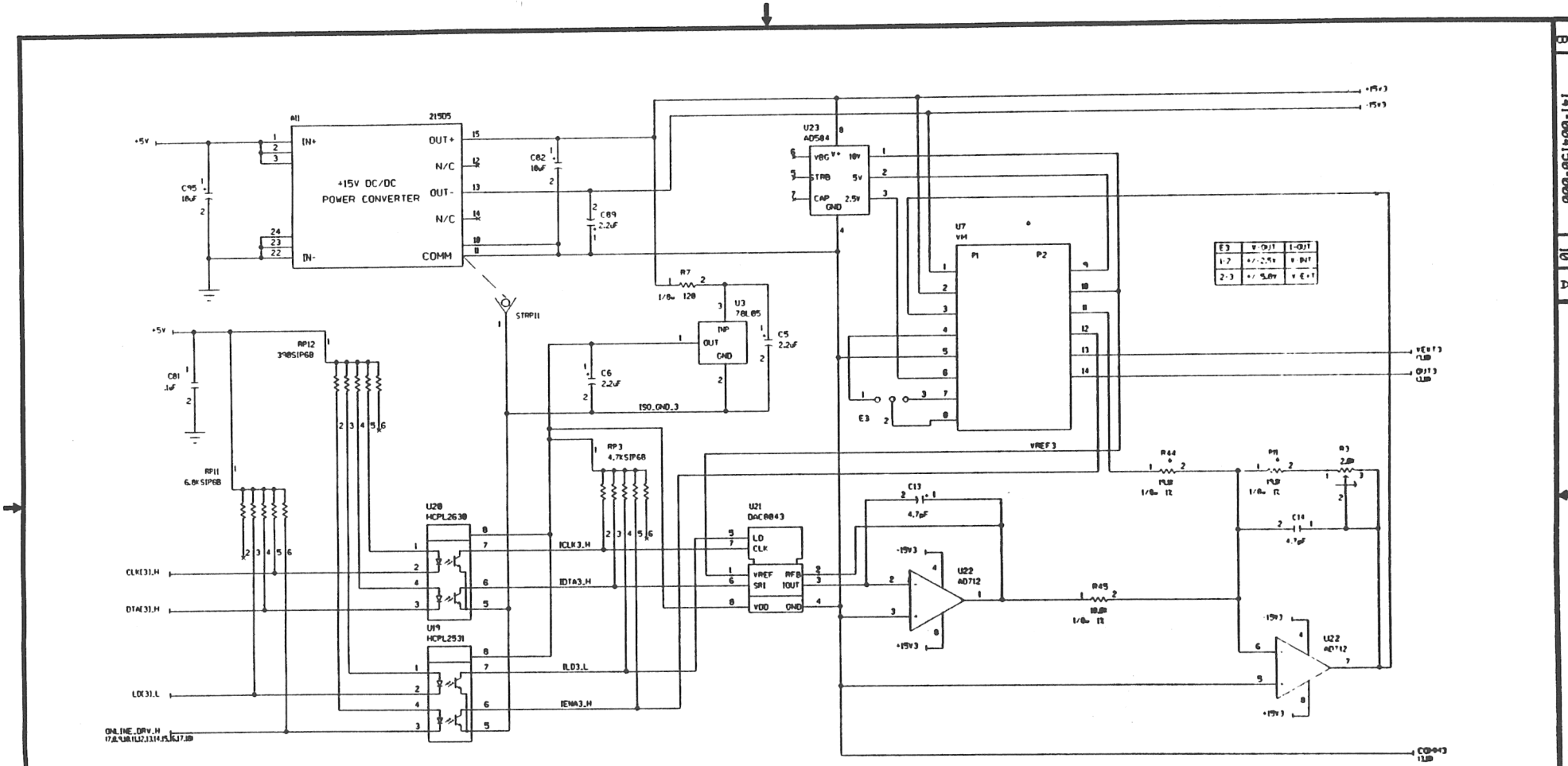

E3	V-OUT	I-OUT
1-2	+/-2.5V	V OUT
2-3	+/-5.0V	V EXT

* THIS PART IS OPTION DEPENDENT. REFER TO SEPARATE PARTS LIST FOR APPLICATION AND VALUE.

OUTPUT CHANNEL 3

VMIC Huntsville, Alabama 35803-3308
VME Microsystems International Corporation

DRAWN D. SMITH	SIZE B	FSCM NO. 0BPH5	DWG NO. 141-004150-000
CHECKED A. Musser 7-29-93	SCALE NONE		SHEET 10

B 141-004150-000 10 A

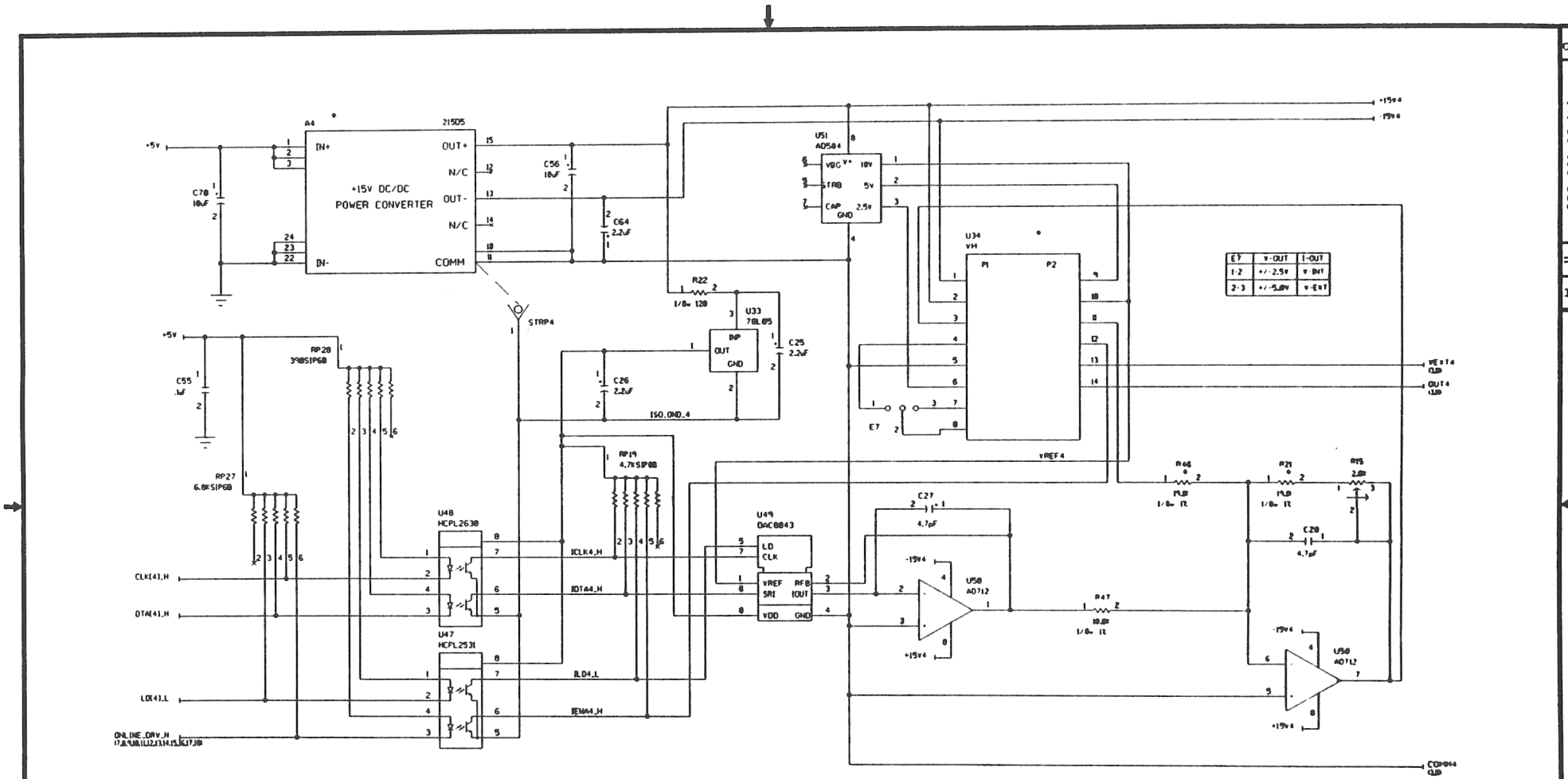

E7	V-OUT	I-OUT
1-2	+/-2.5V	V-OUT
2-3	+/-5.0V	V-EXT

* THIS PART IS OPTION DEPENDENT. REFER TO SEPARATE PARTS LIST FOR APPLICATION AND VALUE.

OUTPUT CHANNEL 4

VMIC Huntsville, Alabama 35803-3308
VME Microsystems International Corporation

DRAWN D. SMITH	SIZE B	FORM NO. 0BPH5	DWG NO. 141-004150-000
CHECKED C. Mugger 7-29-93	SCALE NONE		SHEET 11

SCHEMATIC NAME: 0000 SHEET NUMBER: 11 DATE: JUL 29, 1993

B 141-004150-000 11 A

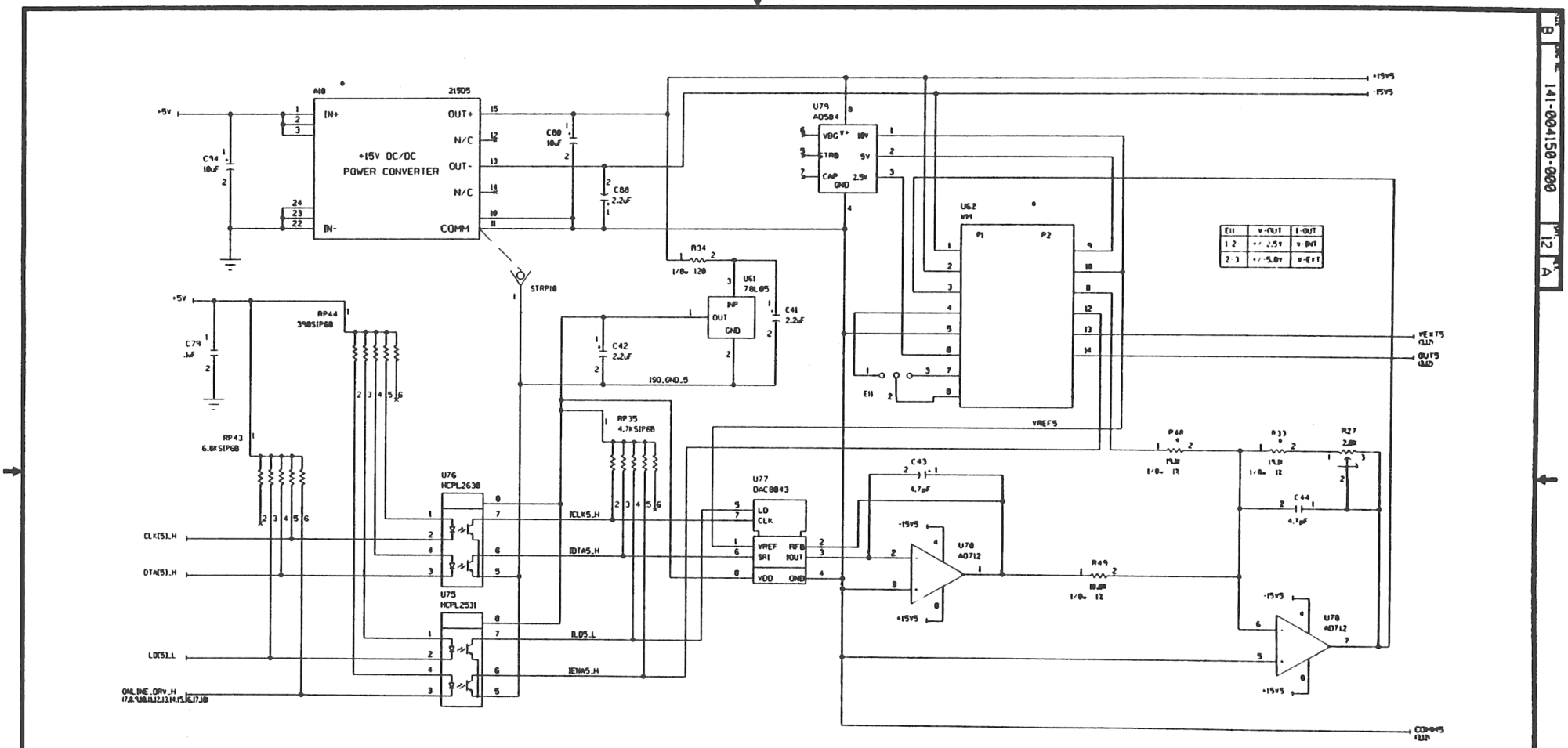

* THIS PART IS OPTION DEPENDENT. REFER TO SEPARATE PARTS LIST FOR APPLICATION AND VALUE.

OUTPUT CHANNEL 5

VMIC Huntsville, Alabama 35803-3308
VME Microsystems International Corporation

DRAWN D. SMITH	SIZE B	FSCM NO. 0BPH5	DWG NO. 141-004150-000
CHECKED C. Musick 7-29-93	SCALE NONE		SHEET 12

B 141-004150-000 12 A

SCHEMATIC NAME: 0000 SHEET NUMBER: 12 DATE: Jul 29, 1993

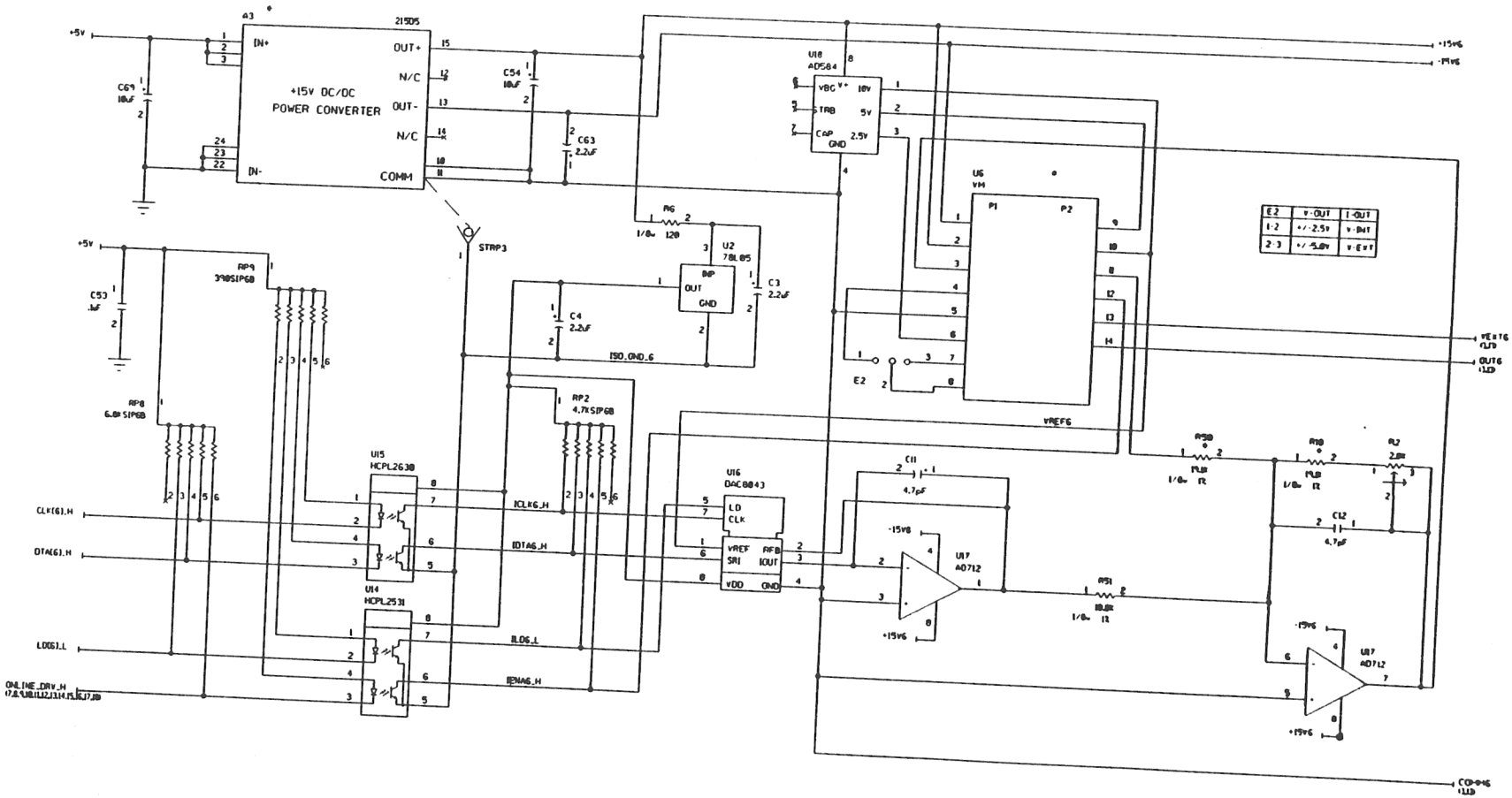

E2	V-OUT	I-OUT
1-2	+/-2.5V	V-INT
2-3	+/-5.0V	V-EXT

* THIS PART IS OPTION DEPENDENT. REFER TO SEPARATE PARTS LIST FOR APPLICATION AND VALUE.

VMIC Huntsville, Alabama 35803-3308
VME Microsystems International Corporation

DRAWN: D. SMITH
CHECKED: C. Murphy 7-29-93

OUTPUT CHANNEL 6

SIZE	FORM NO.	DWG NO.
B	0BPH5	141-004150-000

SCALE NONE

SHEET 13

SCHEMATIC NAME: [illegible] SHEET NUMBER: 13 DATE: [illegible]

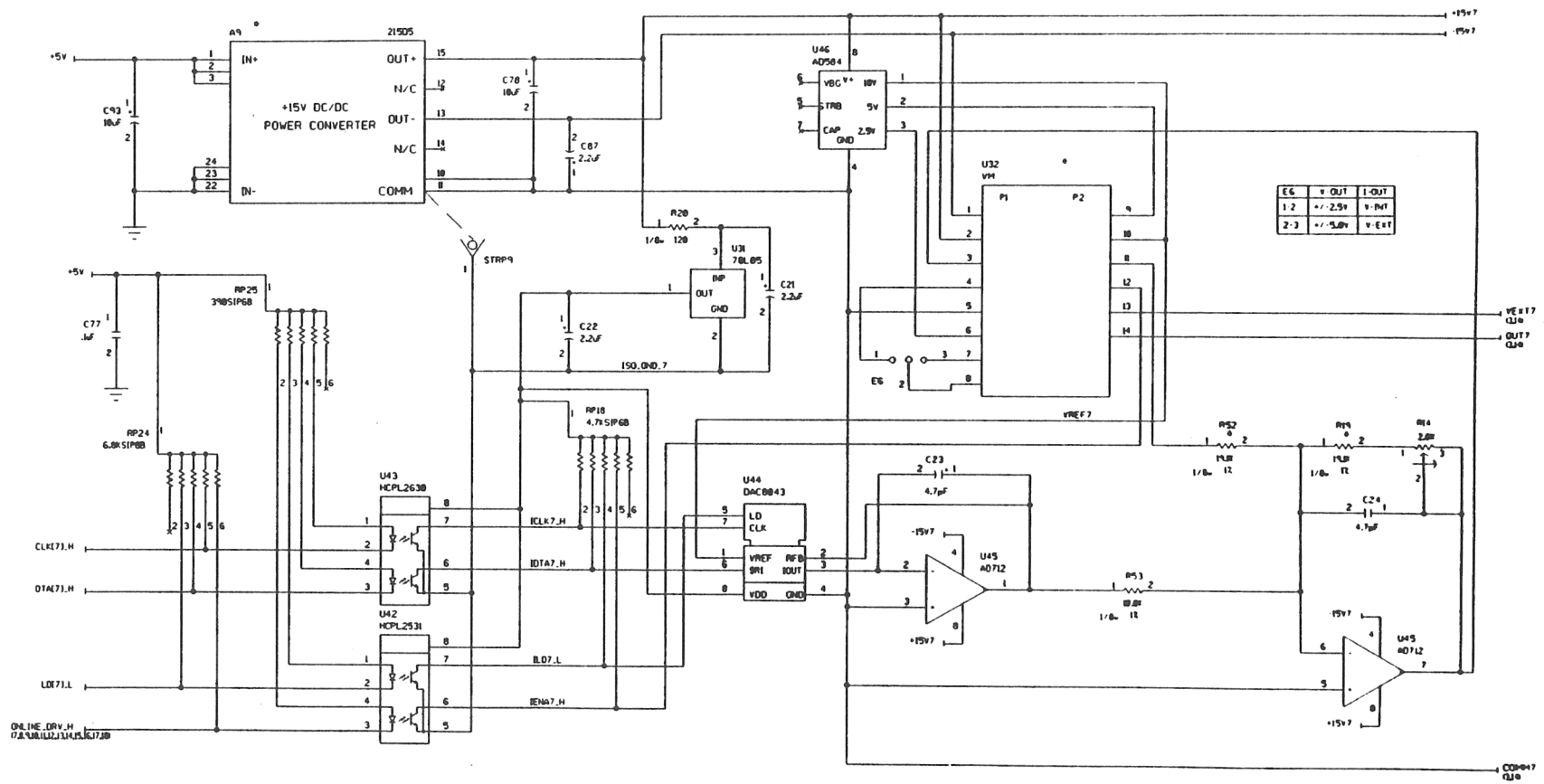

E6	V-OUT	I-OUT
1-2	+/-2.5V	V-INT
2-3	+/-5.0V	V-EXT

* THIS PART IS OPTION DEPENDENT. REFER TO SEPARATE PARTS LIST FOR APPLICATION AND VALUE.

OUTPUT CHANNEL 7

VMIC Huntsville, Alabama 35803-3308
VME Microsystems International Corporation

DRAWN: D. SMITH	SIZE: B	FORM NO.: 0BPH5	DWG NO.: 141-004150-000
CHECKED: C. Musser 7-29-93	SCALE: NONE		SHEET: 14

SCHEMATIC NAME: page SHEET NUMBER: 14 DATE: Jul 29, 1993

B 141-004150-000 14 A

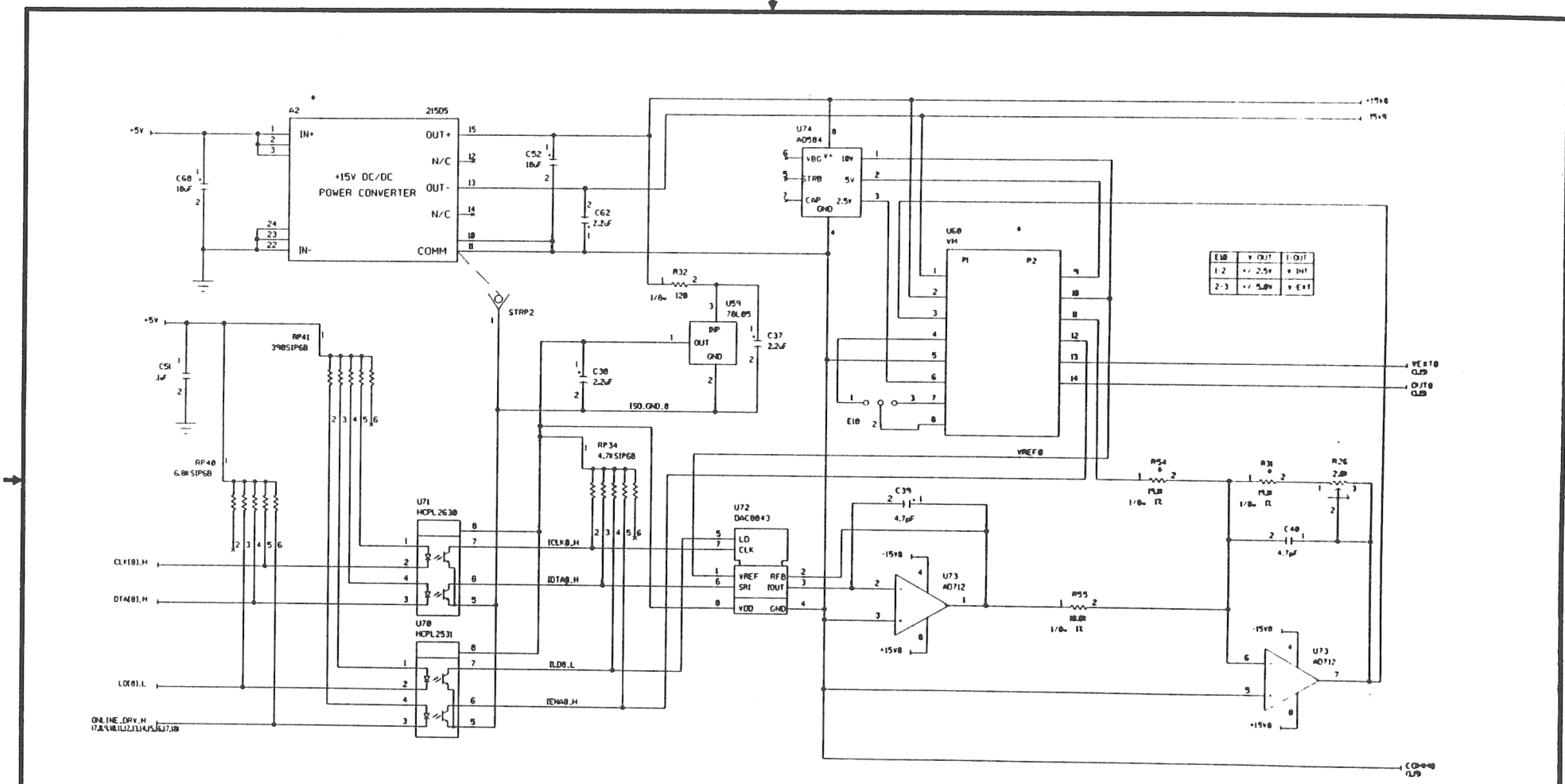

E10	V OUT	I OUT
1-2	+/- 2.5V	V INT
2-3	+/- 5.0V	V EXT

* THIS PART IS OPTION DEPENDENT. REFER TO SEPARATE PARTS LIST FOR APPLICATION AND VALUE.

OUTPUT CHANNEL 8

VMIC® Huntsville, Alabama 35803-3308
VME Microsystems International Corporation

DRAWN D. SMITH	SIZE B	FORM NO. 0BPH5	DWG NO. 141-004150-000
CHECKED C. Musser 7-29-93	SCALE NONE		SHEET 15

SCHEMATIC NAME: 0000 SHEET NUMBER: 15 DATE: Jul 29, 1993

141-004150-000 15 A

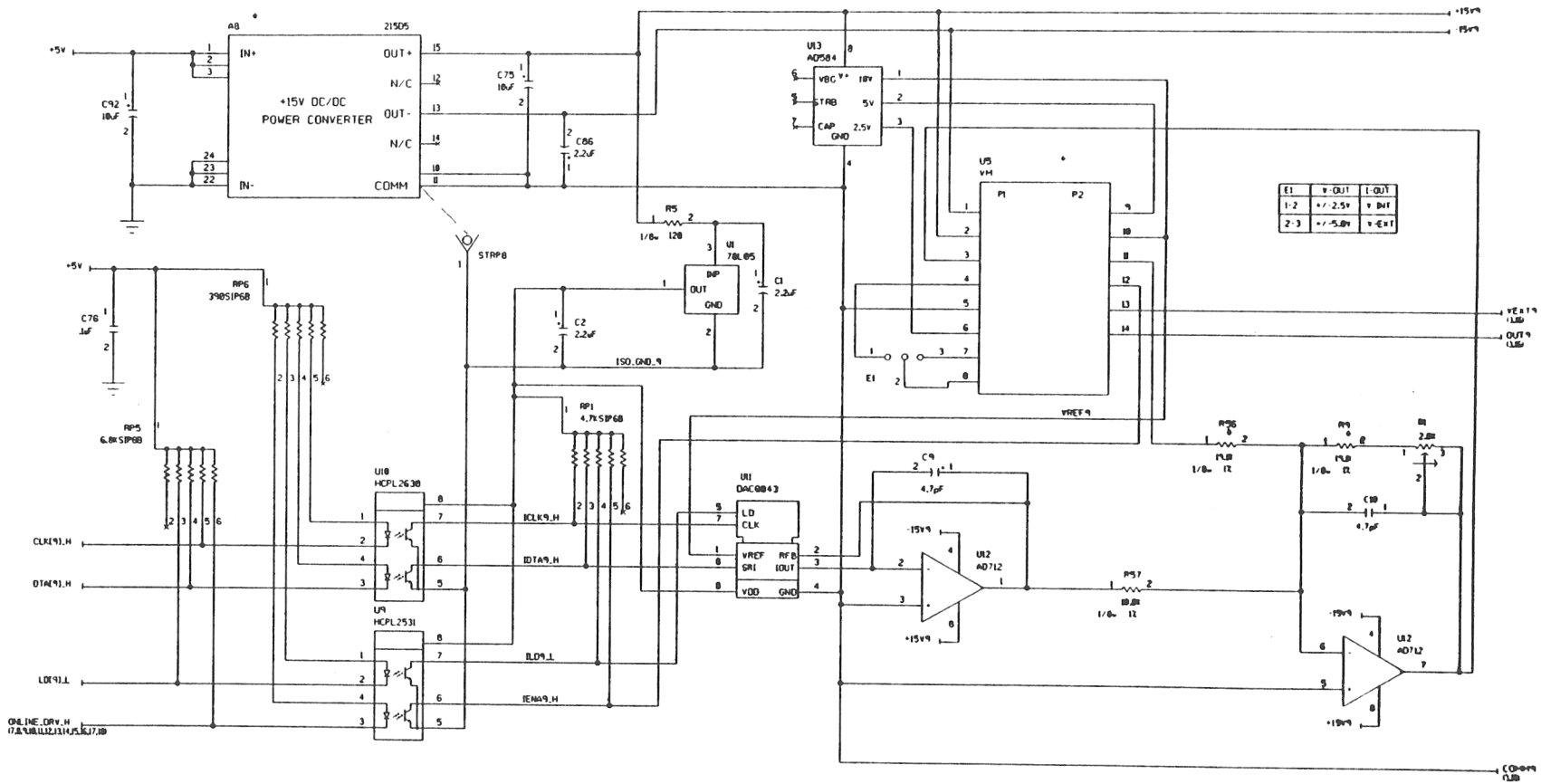

E1	V-OUT	I-OUT
1-2	+/-2.5V	V INT
2-3	+/-5.0V	V-EXT

* THIS PART IS OPTION DEPENDENT. REFER TO SEPARATE PARTS LIST FOR APPLICATION AND VALUE.

OUTPUT CHANNEL 9

VMIC® Huntsville, Alabama 35803-3308
VME Microsystems International Corporation

DRAWN: D. SMITH	SIZE B	FORM NO. 0BPH5	DWG NO. 141-004150-000
CHECKED: C. Musser 7-29-93	SCALE NONE		SHEET 16

SCHEMATIC NAME: page SHEET NUMBER: 16 DATE: 7-29-1993

141-004150-000 16 A

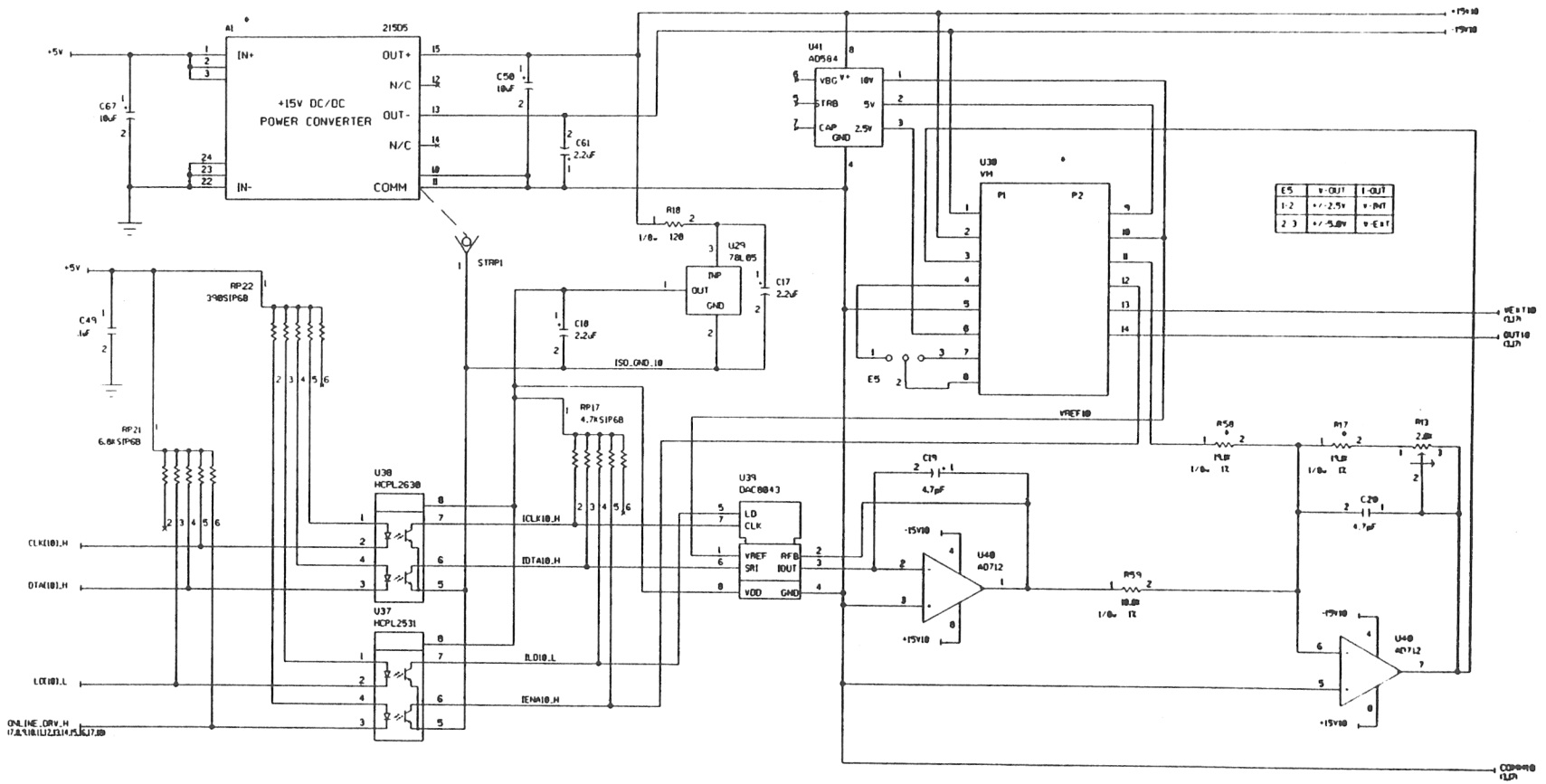

E5	V-OUT	I-OUT
1-2	+/-2.5V	V-INT
2-3	+/-5.0V	V-EXT

* THIS PART IS OPTION DEPENDENT. REFER TO SEPARATE PARTS LIST FOR APPLICATION AND VALUE.

OUTPUT CHANNEL 10

VMIC Huntsville, Alabama 35803-3308
VME Microsystems International Corporation

DRAWN: D. SMITH	SIZE: B	FORM NO.: 0BPH5	DWG NO.: 141-004150-000
CHECKED: C. Musser 7-29-93	SCALE: NONE		SHEET 17

141-004150-000 17 A

SCHEMATIC NAME: 0000 SHEET NUMBER: 17 DATE: Jul 29, 1993

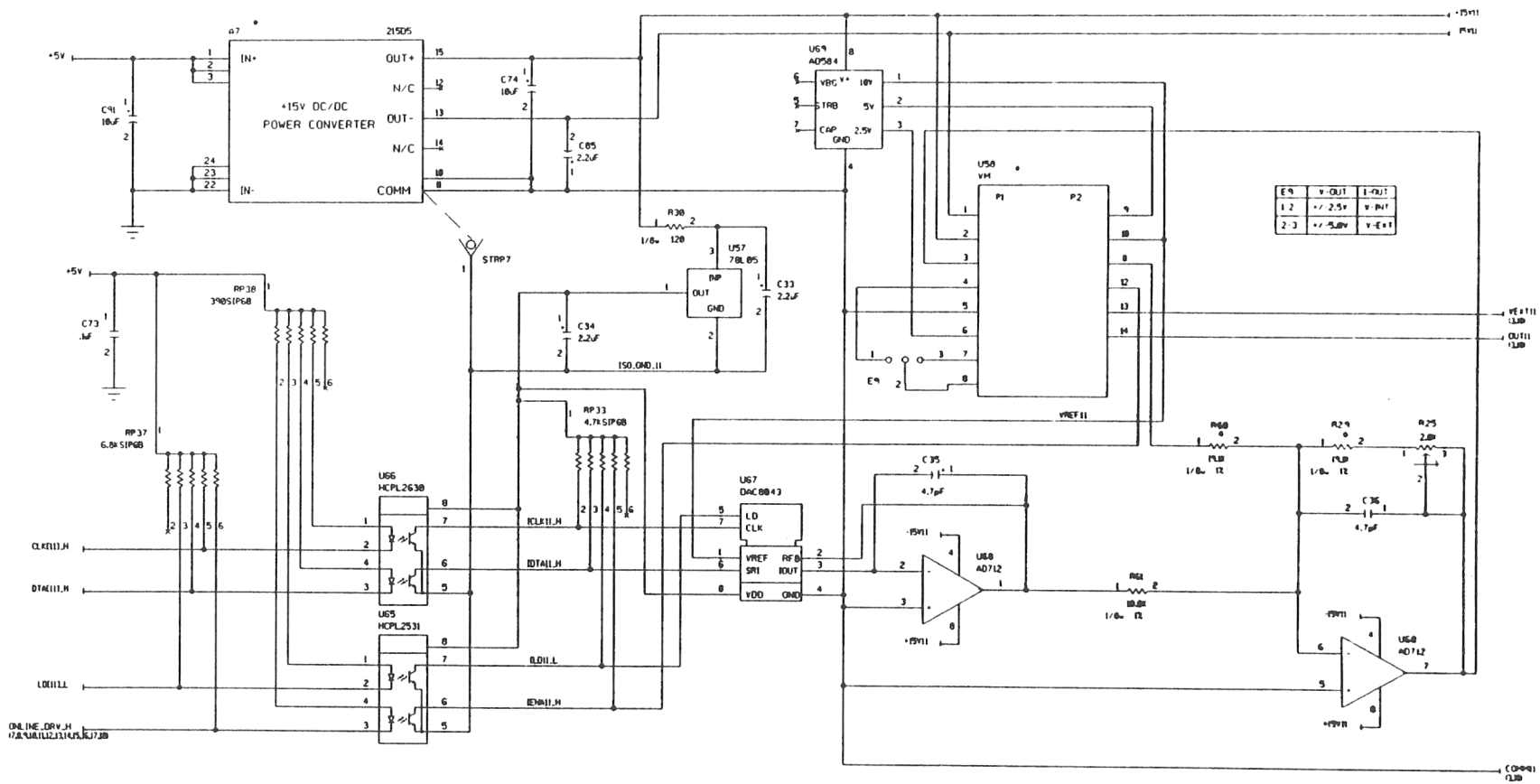

E9	V-OUT	I-OUT
1-2	+/-2.5V	V-INT
2-3	+/-5.0V	V-EXT

* THIS PART IS OPTION DEPENDENT. REFER TO SEPARATE PARTS LIST FOR APPLICATION AND VALUE.

OUTPUT CHANNEL 11

VMIC® Huntsville, Alabama 35803-3308
VME Microsystems International Corporation

DRAWN: D. SMITH	SIZE: B	FORM NO.: 0BPH5	DWG NO.: 141-004150-000
CHECKED: C. Mugger 7-29-93	SCALE: NONE		SHEET: 18

SCHEMATIC NAME: page SHEET NUMBER: 18 DATE: Jul 29, 1993

141-004150-000 18 A

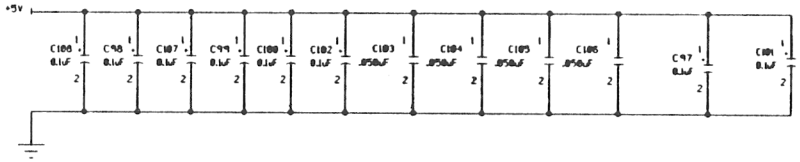

VMIC Huntsville, Alabama 35803-3308
VME Microsystems International Corporation

DRAWN: D. SMITH	SIZE: B	FORM NO.: 0BPH5	DWG NO.: 141-004150-000
CHECKED: C. Musser 7-29-93	SCALE: NONE		SHEET 19 OF 19

SIZE	DWG NO	SH	REV
A	132-004150-000	1	A

NOTES:

1. FOR SCHEMATIC DIAGRAM SEE 141-004150-000.
2. FOR TEST PROCEDURE SEE 510-004150-000.

REVISION STATUS OF 332
A

REVISIONS

REV	DESCRIPTION	DATE	APPROVED
A	RELEASE PER ECO 93-0587	8.9.93	[illegible]

UNLESS OTHERWISE SPECIFIED	SIGNATURES	DATE
DIMENSIONS ARE IN INCHES TOLERANCES ON: 2 PL. DECIMALS ± 3 PL. DECIMALS ± ANGLES ± FRACTIONS ±	DRAWN: E. JORY	7/28/93
	PROJ.ENG.: [illegible]	8-9-93
	ENG.MGR.: [illegible]	8-9-93
	PROD.: [illegible]	8-11-93
THIS DRAWING AND SPECIFICATION HEREIN ARE THE PROPERTY OF VMIC AND SHALL NOT BE REPRODUCED OR COPIED OR USED IN WHOLE OR IN PART AS A BASIS FOR THE MANUFACTURE OR SALE OF ITEMS WITHOUT WRITTEN PERMISSION.	Q.A.: [illegible]	8-11-93

VMIC® HUNTSVILLE, ALABAMA 35803-3308
VME MICROSYSTEMS INTERNATIONAL CORPORATION

ASSEMBLY DRAWING
VMIVME-4150

SIZE	FSCM NO.	DWG NO.
A	OBPH5	132-004150-000

SCALE	SHEET
NONE	1 OF 12

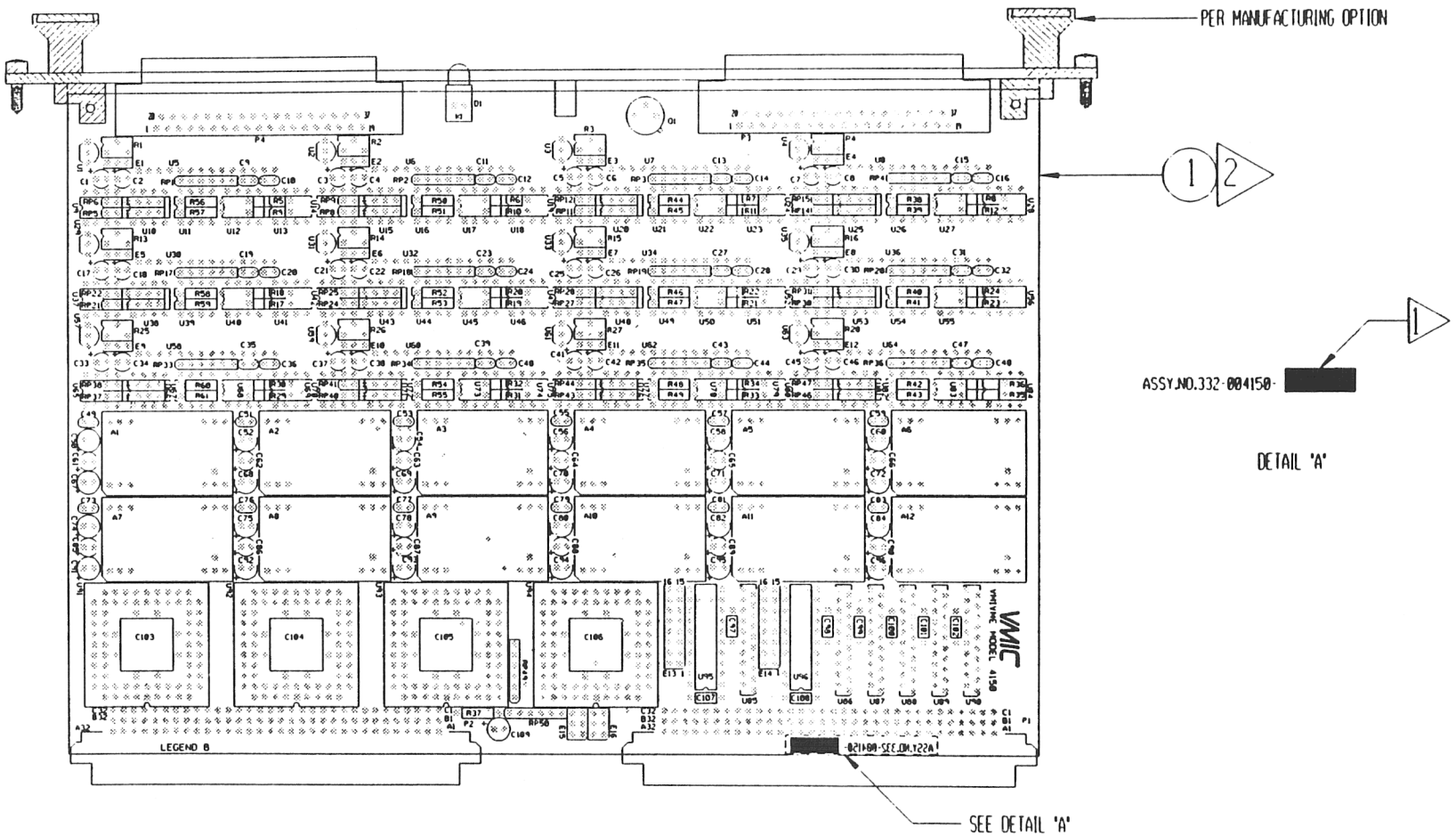

THIS DRAWING AND SPECIFICATION HEREIN, ARE THE PROPERTY OF VMIC AND SHALL NOT BE REPRODUCED OR COPIED OR USED IN WHOLE OR IN PART AS A BASIS FOR THE MANUFACTURE OR SALE OF ITEMS WITHOUT WRITTEN PERMISSION.

VMIC

VME MICROSYSTEMS INTERNATIONAL CORPORATION
12090 SOUTH MEMORIAL PARKWAY
HUNTSVILLE, ALABAMA 35803-3308

SIGNATURES	DATE	SIZE		DWG. NO.	REV
DRAWN M. GOULD	04/27/92	B	QBPHS	132-004150-000	A
CHECKED C. MUZECY	7-29-93	SCALE NONE		SHEET 2	

SIZE	DWG NO	SH	REV
A	132-004150-000	2A	A

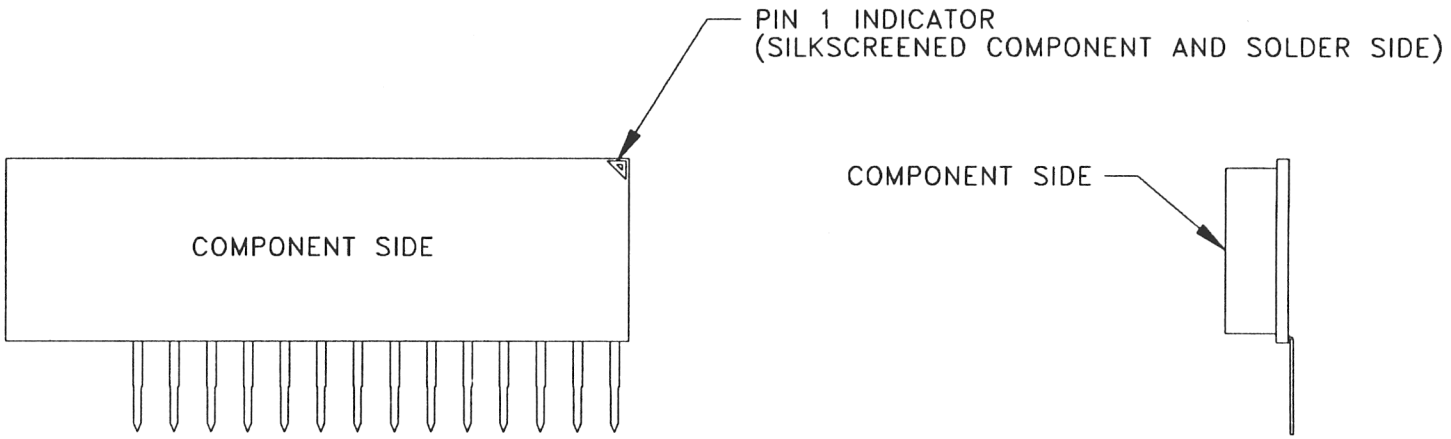

302 – MODULE PIN 1 INDICATOR DETAIL

VMIC® HUNTSVILLE, AL 35803-3308 VME MICROSYSTEMS INTERNATIONAL CORP.	SIZE A	FSCM NO. 0BPH5	DWG NO. 132-004150-000
DRAWN: E. JORY			
CHECKED: C. Murphy 1-29-93	SCALE		SHEET 2A

REWORK LEGEND:

A. REWORK INSTRUCTIONS SHALL BE ACCOMPLISHED ON THE COPPER REVISION(S) INDICATED AND WILL BECOME A PART OF THE ASSEMBLED BOARD.

B. REWORK INSTRUCTION SYMBOLS:

1. PIN ONE DOT ■
2. DRILL HOLE ●
3. DISCONNECT TRACE ×
4. TRACE ON INTERNAL LAYER ------
5. TRACE ON EXTERNAL LAYER ———

INSTRUCTIONS:

NOTES:

1 A. ALL ASSEMBLED BOARDS SHALL BE IDENTIFIED WITH THE ASSEMBLED BOARD PART NUMBER. THIS NUMBER INCLUDES THE CURRENT REVISION LETTER LISTED IN THE "REVISION STATUS OF 332" BLOCK (SEE SHEET 1). THE RESULTING PART SHALL BECOME A 332-004150-XXX (REV).

B. THE REVISION LETTER(S) OF THE ASSEMBLY DRAWING SHALL BE STAMPED IN THE DESIGNATED AREA.

C. REMOVE ANY EXISTING REVISION LETTER FROM THE 332 ASSEMBLED PART NUMBER.

D. REMOVABLE NON-SMEARING INK SHALL BE USED TO STAMP REVISION LETTERS IN THE DESIGNATED AREA.

2 SOLDER COMPOSITION COMPLIES WITH MIL-STD-2000.

3. SUBMERGE THE 332-004150-XXX IN AN ALCOHOL BATH PRIOR TO TEST BURN-IN.

OPT. A	OPT. B	OPT. C	QUANTITY	ITEM #	REFERENCE DESIGNATOR	PART NO.	NOMENCLATURE OR DESCRIPTION	MANUFACTURER'S PART NO.
			1	1		333-004150-000	BOARD: PC, RAW, 8 LAYERS	
			1	2		317-000110-000	F/P ASSY: EXTRUDED EJECTOR, TWO 37 PIN CUTOUT, BOARD MOUNT LED	
			1	3		324-004150-100	LABEL: ID, 4150, FRONT PANEL	
			4	4	P1,2	328-250000-010	SCREW: METRIC, 2.5 X 10MM, SS	
			8	5	P1-4	328-250001-025	NUT: METRIC, 2.5MM, HEX, SS	
			A/R	6	REF P1-4	316-000002-000	LOCTITE: SMALL SCREW THREADLOCKER 222	
			1	7	U93	303-000992-000	PROGRAMMED PAL: FILE: 4150-93A.TDF A PROGRAMMED EPM5128 (331-300138-200)	
			1	8	U94	303-000995-000	PROGRAMMED PAL: FILE: 4150-94A.TDF A PROGRAMMED EP1810LC-20T (331-300139-200)	
			4	9	U23,28,56,84	311-000017-000	REFERENCE, VOLTAGE: 40V INPUT, 10, 7.5, 5 OR 2.5V OUTPUT, 8 PIN PLASTIC DIP	AD584(J,K,L)N (ANALOG DEVICES)
			4	10	U22,27,55,83	311-000018-012	AMP: OPERATIONAL, +-18V, 500mW, 0 TO 70 DEGREES, PLASTIC DIP	AD712KN (ANALOG DEVICES)
			9	11	C58,60,71,72,82 84,95,96,109	315-102001-106	CAP: 10uF, .100 LEAD SPACE, 20%, 25V, TANTALUM	T35(0,1)E106M025AS (KEMET)
			12	12	C5-8,29,30,45 46,65,66,89,90	315-102001-225	CAP: 2.2uF, .100 LEAD SPACE, 20%, 25V, TANTALUM	T35(0,1)B225M025AS (KEMET)
			4	13	C57,59,81,83	315-205000-104	CAP: .1uF, .100 LEAD SPACE, 20%, 50V, Z5U, CERAMIC MONOLYTHIC	C3(15,20)C104M5U5CA (KEMET)
			8	14	C97-102,107,108	315-205002-104	CAP: .1uF, .300 LEAD SPACE, 20%, 50V, Z5U, CERAMIC MONOLYTHIC	P104M26Z5UFVPWN (PHILLIPS)
			8	15	C13-16,31,32 47,48	315-220003-479	CAP: 4.7PF, .100 LEAD SPACE,.5pF, 200V, NPO, CERAMIC MONOLYTHIC	C3(15,20)C479D2G5CA (KEMET)

VMIC® **PARTS LIST**

VME MICROSYSTEMS INT'L CORP.

CODE	REV.	DRAWING NUMBER	CHECKED	SH NO.
OBPH5	A	132-004150-000	C. Murray	4
			DATE 7/29/93	

F0086-90

OPT. A	OPT. B	OPT. C	QUANTITY	ITEM #	REFERENCE DESIGNATOR	PART NO.	NOMENCLATURE OR DESCRIPTION	MANUFACTURER'S PART NO.
			2	16	C105,106	315-900000-000	CAP: FIXED, MICRODECOUPLING,.6" X .6", Z5V, .050uF	503AHL (ROGERS)
			20	17	U19-28,52-56 80-84	321-000007-002	SOCKET: IC, BREAKAWAY STRIP, 10 CONTACTS, TIN/GOLD	3852010-02 (MUPAC)
			26	18	E3,4,8,12-16	321-000015-001	JUMPER: PC BOARD, 2 POSITION, FEMALE, GOLD PLATED CONTACT, BLACK	MSB-2360-G-C-STP (McKENZIE)
			12	19	E3,4,8,12	321-000016-011	TERMINAL: PC BOARD, SINGLE ROW, .025 THICK, GOLD PLATED, ONE POST	92983401-01 (PANDUIT)
			22	20	E13-16	321-000017-011	TERMINAL: PC BOARD, DUAL ROW, .025 THICK, GOLD PLATED, ONE POST	PEG02DS-(T,F)BR (CRANE)
			2	21	P3,4	321-000041-422	CONNECTOR: RECEPTACLE, 37 PIN, METAL-SHELL, RIGHT-ANGLE, THREADED INSERT, W/O BOARDLOCKS, .318 MOUNT	745784-6 (AMP)
			1	22	P1	321-000054-001	CONNECTOR: DIN, 96 PIN WITH EXTENDED GROUND PINS, TYPE C	Z-534068-6 (AMP)
			1	23	P2	321-000054-002	CONNECTOR: DIN, 96 PIN WITH EXTENDED GROUND PINS, TYPE C	Z-534068-7 (AMP)
			2	24	U93,94	321-000062-068	CARRIER: CHIP, 68 PIN PLCC	821574-1 (AMP)
			4	25	U21,26,54,82	323-250037-000	CONVERTER: DIGITAL TO ANALOG, 12-BIT SERIAL INPUT, MULTIPLIER	DAC8043(GP,EZ,FZ,FP) (PMI)
			4	26	U85-88	331-304244-133	IC: DIGITAL, OCTAL BUFFER/LINE DRIVER, TRI-STATE, NON-INVERTING, ZIP PACKAGE	QS74FCT244ATZ (QUALITY SEMI)
			2	27	U89,90	331-304245-723	IC: DIGITAL, OCTAL BIDIRECTIONAL TRANSEIVER, TRI-STATE, ZIP PACKAGE	QS74FCT245TATZ (QUALITY SEMI)
			2	28	U95,96	331-304520-100	IC: DIGITAL, 8 BIT IDENTITY COMPARATOR, PLASTIC DIP	SN74ALS520N (TI)
			4	29	U3,4,35,63	331-309111-050	IC: VOLTAGE REGULATOR, 5 VOLTS, 100mA OUPUT, POSITIVE, INTERNAL SHORT CIRCUIT	LM78L05A (NATIONAL)

VMIC® **PARTS LIST**

VME MICROSYSTEMS INT'L CORP.

CODE	REV.	DRAWING NUMBER	CHECKED	SH NO.
OBPH5	A	132-004150-000	C.Murgey	5
			DATE 7/29/93	

F0086-90

OPT.			QUANTITY	ITEM #	REFERENCE DESIGNATOR	PART NO.	NOMENCLATURE OR DESCRIPTION	MANUFACTURER'S PART NO.
A	B	C						
			1	30	D1	337-000002-211	DIODE: LED, RED, 5V, 12mA, CURRENT-LIMITING RESISTOR, RIGHT ANGLE PCB MOUNT	5302H1-5V (IDI)
			4	31	R7,8,24,36	347-000011-121	RESISTOR: 120 OHM, 1/8W, 5%, CARBON FILM	
			4	32	R39,41,43,45	347-000014-100	RESISTOR: 10K OHM, 1/8W, 1%, METAL FILM	
			1	33	R37	347-000014-196	RESISTOR: 19.6K OHM, 1/8W, 1%, METAL FILM	
			4	34	RP12,15,31,47	347-001000-391	SIP: 390 OHM, BUSSED, 6 PIN, LOW PROFILE	4606X-101-391 (BOURNS)
			6	35	RP3,4,20,36 49,50	347-001000-472	SIP: 4.7K OHM, BUSSED, 6 PIN, LOW PROFILE	4606X-101-472 (BOURNS)
			4	36	RP11,14,30,46	347-001000-682	SIP: 6.8K OHM, BUSSED, 6 PIN, LOW PROFILE	4606X-101-682 (BOURNS)
			4	37	R3,4,16,28	347-500005-202	POT: TRIMMER, 2K OHM, MULTI-TURN, TOP ADJUSTMENT	3266W-1-202 (BOURNS)
			4	38	U20,25,53,81	348-000004-000	OPTOCOUPLER:DUAL VERY HIGH-SPEED LOGIC GATE, 7V OUTPUT, 5V INPUT	HCPL-2630 (HP)
			4	39	U19,24,52,80	348-000008-001	TRANSISTOR: OPTOCOUPLER, DUAL HIGH-SPEED, 5 VOLTS, -.5 V TO 30V OUTPUT	HCPL-2531 (QUALITY)
			1	40	Q1	348-000011-001	TRANSISTOR: N-CHANNEL, POWER MOSFET, TO-39 PACKAGE IRFF 12X SERIES	IRFF121 (IR)
			4	41	A5,6,11,12	340-000041-020	CONVERTER: DC\DC, 3000V P-P ISOLATED, 2 WATTS, DUAL OUTPUT	215D5HI (CDI)
			4	42	P3,4	328-250000-008	SCREW: METRIC, 2.5 X 8MM, SS	
				43				
				44				
				45				

VMIC® **PARTS LIST**

VME MICROSYSTEMS INT'L CORP.

CODE	REV.	DRAWING NUMBER	CHECKED	SH NO.
OBPH5	A	132-004150-000	C. Muzzey	6
			DATE 7/29/93	

F0086-90

OPT. A	OPT. B	OPT. C	QUANTITY	ITEM #	REFERENCE DESIGNATOR	PART NO.	NOMENCLATURE OR DESCRIPTION	MANUFACTURER'S PART NO.
1	B	0	1	46	U92	303-000993-000	PROGRAMMED PAL: FILE: 4150-92A.TDF A PROGRAMMED EPM5128 (331-300138-200)	
1	B	0	4	47	U18,46,51,79	311-000017-000	REFERENCE, VOLTAGE: 40V INPUT, 10, 7.5, 5 OR 2.5V OUTPUT, 8 PIN PLASTIC DIP	AD584(J,K,L)N (ANALOG DEVICES)
1	B	0	4	48	U17,45,50,78	311-000018-012	AMP: OPERATIONAL, +-18V, 500mW, 0 TO 70 DEGREES, PLASTIC DIP	AD712KN (ANALOG DEVICES)
1	B	0	8	49	C54,56,69,70 78,80,93,94	315-102001-106	CAP: 10uF, .100 LEAD SPACE, 20%, 25V, TANTALUM	T35(0,1)E106M025AS (KEMET)
1	B	0	12	50	C3,4,21,22,25 26,41,42,63,64 87,88	315-102001-225	CAP: 2.2uF, .100 LEAD SPACE, 20%, 25V, TANTALUM	T35(0,1)B225M025AS (KEMET)
1	B	0	4	51	C53,55,77,79	315-205000-104	CAP: .1uF, .100 LEAD SPACE, 20%, 50V, Z5U, CERAMIC MONOLYTHIC	C3(15,20)C104M5U5CA (KEMET)
1	B	0	8	52	C11,12,23,24,27 28,43,44	315-220003-479	CAP: 4.7PF, .100 LEAD SPACE,.5pF, 200V, NPO, CERAMIC MONOLYTHIC	C3(15,20)C479D2G5CA (KEMET)
1	B	0	1	53	C104	315-900000-000	CAP: FIXED, MICRODECOUPLING,.6" X .6", Z5V, .050uF	503AHL (ROGERS)
1	B	0	20	54	U14-18,42-51 75-79	321-000007-002	SOCKET: IC, BREAKAWAY STRIP, 10 CONTACTS, TIN/GOLD	3852010-02 (MUPAC)
1	B	0	4	55	E2,6,7,11	321-000015-001	JUMPER: PC BOARD, 2 POSITION, FEMALE, GOLD PLATED CONTACT, BLACK	MSB-2360-G-C-STP (McKENZIE)
1	B	0	12	56	E2,6,7,11	321-000016-011	TERMINAL: PC BOARD, SINGLE ROW, .025 THICK, GOLD PLATED, ONE POST	92983401-01 (PANDUIT)
1	B	0	1	57	U92	321-000062-068	CARRIER: CHIP, 68 PIN PLCC	821574-1 (AMP)
1	B	0	4	58	U16,44,49,77	323-250037-000	CONVERTER: DIGITAL TO ANALOG, 12-BIT SERIAL INPUT, MULTIPLIER	DAC8043(GP,EZ,FZ,FP) (PMI)
1	B	0	4	59	U2,31,33,61	331-309111-050	IC: VOLTAGE REGULATOR, 5 VOLTS, 100mA OUPUT, POSITIVE, INTERNAL SHORT CIRCUIT	LM78L05A (NATIONAL)

VMIC® **PARTS LIST**

VME MICROSYSTEMS INT'L CORP.

CODE	REV.	DRAWING NUMBER	CHECKED	SH NO.
OBPH5	A	132-004150-000	C. Murphy	7
			DATE 7/29/93	

F0086-90

OPT. A	OPT. B	OPT. C	QUANTITY	ITEM #	REFERENCE DESIGNATOR	PART NO.	NOMENCLATURE OR DESCRIPTION	MANUFACTURER'S PART NO.
1	B	0	4	60	R6,20,22,34	347-000011-121	RESISTOR: 120 OHM, 1/8W, 5%, CARBON FILM	
1	B	0	4	61	R47,49,51,53	347-000014-100	RESISTOR: 10K OHM, 1/8W, 1%, METAL FILM	
1	B	0	4	62	RP9,25,28,44	347-001000-391	SIP: 390 OHM, BUSSED, 6 PIN, LOW PROFILE	4606X-101-391 (BOURNS)
1	B	0	4	63	RP2,18,19,35	347-001000-472	SIP: 4.7K OHM, BUSSED, 6 PIN, LOW PROFILE	4606X-101-472 (BOURNS)
1	B	0	4	64	RP8,24,27,43	347-001000-682	SIP: 6.8K OHM, BUSSED, 6 PIN, LOW PROFILE	4606X-101-682 (BOURNS)
1	B	0	4	65	R2,14,15,27	347-500005-202	POT: TRIMMER, 2K OHM, MULTI-TURN, TOP ADJUSTMENT	3266W-1-202 (BOURNS)
1	B	0	4	66	U15,43,48,76	348-000004-000	OPTOCOUPLER:DUAL VERY HIGH-SPEED LOGIC GATE, 7V OUTPUT, 5V INPUT	HCPL-2630 (HP)
1	B	0	4	67	U14,42,47,75	348-000008-001	TRANSISTOR: OPTOCOUPLER, DUAL HIGH-SPEED, 5 VOLTS, -.5 V TO 30V OUTPUT	HCPL-2531 (QUALITY)
1	B	0	4	68	A3,4,9,10	340-000041-020	CONVERTER: DC\DC, 3000V P-P ISOLATED, 2 WATTS, DUAL OUTPUT	215D5HI (CDI)
2	B	0	1	69	U92	303-000993-000	PROGRAMMED PAL: FILE: 4150-92A.TDF A PROGRAMMED EPM5128 (331-300138-200)	
2	B	0	1	70	U91	303-000994-000	PROGRAMMED PAL: FILE: 4150-91A.TDF A PROGRAMMED EPM5128 (331-300138-200)	
2	B	0	8	71	U13,18,41,46,51 69,74,79	311-000017-000	REFERENCE, VOLTAGE: 40V INPUT, 10, 7.5, 5 OR 2.5V OUTPUT, 8 PIN PLASTIC DIP	AD584(J,K,L)N (ANALOG DEVICES)
2	B	0	8	72	U12,17,40,45,50 68,73,78	311-000018-012	AMP: OPERATIONAL, +-18V, 500mW, 0 TO 70 DEGREES, PLASTIC DIP	AD712KN (ANALOG DEVICES)
2	B	0	16	73	C50,52,54,56,67-70 74,75,78,80,91-94	315-102001-106	CAP: 10uF, .100 LEAD SPACE, 20%, 25V, TANTALUM	T35(0,1)E106M025AS (KEMET)
2	B	0	24	74	C1-4,17,18,21,22,25 26,33,34,37,38,41,42 61-64,85-88	315-102001-225	CAP: 2.2uF, .100 LEAD SPACE, 20%, 25V, TANTALUM	T35(0,1)B225M025AS (KEMET)

VMIC® PARTS LIST
VME MICROSYSTEMS INT'L CORP.

CODE OBPH5 | REV. A | DRAWING NUMBER 132-004150-000 | CHECKED C. Muggie | DATE 7/29/93 | SH NO. 8

OPT. A	OPT. B	OPT. C	QUANTITY	ITEM #	REFERENCE DESIGNATOR	PART NO.	NOMENCLATURE OR DESCRIPTION	MANUFACTURER'S PART NO.
2	B	0	8	75	C49,51,53,55,73 76,77,79	315-205000-104	CAP: .1uF, .100 LEAD SPACE, 20%, 50V, Z5U, CERAMIC MONOLYTHIC	C3(15,20)C104M5U5CA (KEMET)
2	B	0	16	76	C9-12,19,20,23,24,27 28,35,36,39,40,43,44	315-220003-479	CAP: 4.7PF, .100 LEAD SPACE,.5pF, 200V, NPO, CERAMIC MONOLYTHIC	C3(15,20)C479D2G5CA (KEMET)
2	B	0	2	77	C103,104	315-900000-000	CAP: FIXED, MICRODECOUPLING,.6" X .6", Z5V, .050uF	503AHL (ROGERS)
2	B	0	40	78	U9-18,37-51,65-79	321-000007-002	SOCKET: IC, BREAKAWAY STRIP, 10 CONTACTS, TIN/GOLD	3852010-02 (MUPAC)
2	B	0	8	79	E1,2,5-7,9-11	321-000015-001	JUMPER: PC BOARD, 2 POSITION, FEMALE, GOLD PLATED CONTACT, BLACK	MSB-2360-G-C-STP (McKENZIE)
2	B	0	24	80	E1,2,5-7,9-11	321-000016-011	TERMINAL: PC BOARD, SINGLE ROW, .025 THICK, GOLD PLATED, ONE POST	92983401-01 (PANDUIT)
2	B	0	2	81	U91,92	321-000062-068	CARRIER: CHIP, 68 PIN PLCC	821574-1 (AMP)
2	B	0	8	82	U11,16,39,44,49 67,72,77	323-250037-000	CONVERTER: DIGITAL TO ANALOG, 12-BIT SERIAL INPUT, MULTIPLIER	DAC8043(GP,EZ,FZ,FP) (PMI)
2	B	0	8	83	U1,2,29,31,33 57,59,61	331-309111-050	IC: VOLTAGE REGULATOR, 5 VOLTS, 100mA OUPUT, POSITIVE, INTERNAL SHORT CIRCUIT	LM78L05A (NATIONAL)
2	B	0	8	84	R5,6,18,20 22,30,32,34	347-000011-121	RESISTOR: 120 OHM, 1/8W, 5%, CARBON FILM	
2	B	0	8	85	R47,49,51,53 55,57,59,61	347-000014-100	RESISTOR: 10K OHM, 1/8W, 1%, METAL FILM	
2	B	0	8	86	RP6,9,22,25 28,38,41,44	347-001000-391	SIP: 390 OHM, BUSSED, 6 PIN, LOW PROFILE	4606X-101-391 (BOURNS)
2	B	0	8	87	RP1,2,17-19,33-35	347-001000-472	SIP: 4.7K OHM, BUSSED, 6 PIN, LOW PROFILE	4606X-101-472 (BOURNS)
2	B	0	8	88	RP5,8,21,24 27,37,40,43	347-001000-682	SIP: 6.8K OHM, BUSSED, 6 PIN, LOW PROFILE	4606X-101-682 (BOURNS)
2	B	0	8	89	R1,2,13-15,25-27	347-500005-202	POT: TRIMMER, 2K OHM, MULTI-TURN, TOP ADJUSTMENT	3266W-1-202 (BOURNS)

VMIC® **PARTS LIST**

VME MICROSYSTEMS INT'L CORP.

CODE	REV.	DRAWING NUMBER	CHECKED	SH NO.
OBPH5	A	132-004150-000	C. Mazzeo	9
			DATE 7/29/93	

F0086-90

OPT.			QUANTITY	ITEM #	REFERENCE DESIGNATOR	PART NO.	NOMENCLATURE OR DESCRIPTION	MANUFACTURER'S PART NO.
A	B	C						
2	B	0	8	90	A1-4,7-10	340-000041-020	CONVERTER: DC\DC, 3000V P-P ISOLATED, 2 WATTS, DUAL OUTPUT	215D5HI (CDI)
2	B	0	8	91	U10,15,38,43 48,66,71,76	348-000004-000	OPTOCOUPLER:DUAL VERY HIGH-SPEED LOGIC GATE, 7V OUTPUT, 5V INPUT	HCPL-2630 (HP)
2	B	0	8	92	U9,14,37,42 47,65,70,75	348-000008-001	TRANSISTOR: OPTOCOUPLER, DUAL HIGH-SPEED, 5 VOLTS, -.5 V TO 30V OUTPUT	HCPL-2531 (QUALITY)
				93		DELETED		
				94				
0	0	0	4	95	U7,8,36,64	302-000015-000	MODULE: VOLTAGE, BIPOLAR, VMIVME-0144	
0	0	0	8	96	R11,12,23,35 38,40,42,44	347-000014-191	RESISTOR: 19.1K OHM, 1/8W, 1%, METAL FILM	
0	1	0	4	97	U7,8,36,64	302-000014-001	MODULE: CURRENT, VMIVME-0143, 5-20mA	
0	1	0	4	98	R11,12,23,35	347-000017-909	RESISTOR: 9.09K OHM, 1/8W, 1%, METAL FILM	
0	2	0	4	99	U7,8,36,64	302-000014-002	MODULE: CURRENT, VMIVME-0143, 0-20mA	
0	2	0	4	100	R11,12,23,35	347-000017-909	RESISTOR: 9.09K OHM, 1/8W, 1%, METAL FILM	
0	3	0	4	101	U7,8,36,64	302-000014-003	MODULE: CURRENT, VMIVME-0143, 5-25mA	
0	3	0	4	102	R11,12,23,35	347-000017-909	RESISTOR: 9.09K OHM, 1/8W, 1%, METAL FILM	
0	4	0	4	103	U7,8,36,64	302-000024-000	MODULE: VOLTAGE, UNIPOLAR, VMIVME-0157	
0	4	0	4	104	R38,40,42,44	347-000012-301	RESISTOR: 301K OHM, 1/8W, 1%, METAL FILM	
0	4	0	4	105	R11,12,23,35	347-000017-909	RESISTOR: 9.09K OHM, 1/8W, 1%, METAL FILM	
1	0	0	8	106	U6-8,32,34,36,62,64	302-000015-000	MODULE: VOLTAGE, BIPOLAR, VMIVME-0144	

VMIC® **PARTS LIST**

VME MICROSYSTEMS INT'L CORP.

CODE	REV.	DRAWING NUMBER	CHECKED	SH NO.
OBPH5	A	132-004150-000	C. Murray	10
			DATE 7/29/93	

F0086-90

OPT. A	OPT. B	OPT. C	QUANTITY	ITEM #	REFERENCE DESIGNATOR	PART NO.	NOMENCLATURE OR DESCRIPTION	MANUFACTURER'S PART NO.
1	0	0	16	107	R10-12,19,21,23,33 35,38,40,42,44,46 48,50,52	347-000014-191	RESISTOR: 19.1K OHM, 1/8W, 1%, METAL FILM	
1	1	0	8	108	U6-8,32,34,36,62,64	302-000014-001	MODULE: CURRENT, VMIVME-0143, 5-20mA	
1	1	0	8	109	R10-12,19,21,23 33,35	347-000017-909	RESISTOR: 9.09K OHM, 1/8W, 1%, METAL FILM	
1	2	0	8	110	U6-8,32,34,36,62,64	302-000014-002	MODULE: CURRENT, VMIVME-0143, 0-20mA	
1	2	0	8	111	R10-12,19,21,23 33,35	347-000017-909	RESISTOR: 9.09K OHM, 1/8W, 1%, METAL FILM	
1	3	0	8	112	U6-8,32,34,36,62,64	302-000014-003	MODULE: CURRENT, VMIVME-0143, 5-25mA	
1	3	0	8	113	R10-12,19,21,23 33,35	347-000017-909	RESISTOR: 9.09K OHM, 1/8W, 1%, METAL FILM	
1	4	0	8	114	U6-8,32,34,36,62,64	302-000024-000	MODULE: VOLTAGE, UNIPOLAR, VMIVME-0157	
1	4	0	8	115	R38,40,42,44 46,48,50,52	347-000012-301	RESISTOR: 301K OHM, 1/8W, 1%, METAL FILM	
1	4	0	8	116	R10-12,19,21,23 33,35	347-000017-909	RESISTOR: 9.09K OHM, 1/8W, 1%, METAL FILM	
2	0	0	12	117	U5-8,30,32,34,36 58,60,62,64	302-000015-000	MODULE: VOLTAGE, BIPOLAR, VMIVME-0144	
2	0	0	24	118	R9-12,17,19,21,23,29 31,33,35,38,40,42,44 46,48,50,52,54,56,58 60	347-000014-191	RESISTOR: 19.1K OHM, 1/8W, 1%, METAL FILM	
2	1	0	12	119	U5-8,30,32,34,36 58,60,62,64	302-000014-001	MODULE: CURRENT, VMIVME-0143, 5-20mA	
2	1	0	12	120	R9-12,17,19,21 23,29,31,33,35	347-000017-909	RESISTOR: 9.09K OHM, 1/8W, 1%, METAL FILM	

VMIC® **PARTS LIST**

VME MICROSYSTEMS INT'L CORP.

CODE	REV.	DRAWING NUMBER	CHECKED	SH NO.
OBPH5	A	132-004150-000	C. Muzzey	11
			DATE 7/29/93	

OPT. A	OPT. B	OPT. C	QUANTITY	ITEM #	REFERENCE DESIGNATOR	PART NO.	NOMENCLATURE OR DESCRIPTION	MANUFACTURER'S PART NO.
2	2	0	12	121	U5-8,30,32,34 36,58,60,62,64	302-000014-002	MODULE: CURRENT, VMIVME-0143, 0-20mA	
2	2	0	12	122	R9-12,17,19,21 23,29,31,33,35	347-000017-909	RESISTOR: 9.09K OHM, 1/8W, 1%, METAL FILM	
2	3	0	12	123	U5-8,30,32,34 36,58,60,62,64	302-000014-003	MODULE: CURRENT, VMIVME-0143, 5-25mA	
2	3	0	12	124	R9-12,17,19,21,23 29,31,33,35	347-000017-909	RESISTOR: 9.09K OHM, 1/8W, 1%, METAL FILM	
2	4	0	12	125	U5-8,30,32,34, 36,58,60,62,64	302-000024-000	MODULE: VOLTAGE, UNIPOLAR, VMIVME-0157	
2	4	0	12	126	R38,40,42,44,46,48 50,52,54,56,58,60	347-000012-301	RESISTOR: 301K OHM, 1/8W, 1%, METAL FILM	
2	4	0	12	127	R9-12,17,19,21 23,29,31,33,35	347-000017-909	RESISTOR: 9.09K OHM, 1/8W, 1%, METAL FILM	

VMIC® **PARTS LIST**

VME MICROSYSTEMS INT'L CORP.

CODE	REV.	DRAWING NUMBER	CHECKED	SH NO.
OBPH5	A	132-004150-000	C. Mazzey	12
			DATE 7/29/93	

F0086-90