REVISIONS				
ZONE	REV.	DESCRIPTION	DATE	APPROVE
F7 D2	A	ADDED ITEM 18 TO ALL ASSEMBLIES	MRZ 2/3/92	
A 7-8	B	ADDED NOTE 8 (BORING OF MALE & FEMALE ADAPTERS)	MRZ 2/21/92	
A 7-8	C	ADDED NOTES @ ITEMS 3,12 & 20, 3/4 IPS END (ITEM-19) -4,-5 & -6 ASSYS.,& ITEM 20 IN PARTS LIST.TOLERANCES	MRZ 3/18/92	DB 5/22/ DK 5/26/
F-2	D	CORRECTED DASH NUMBERS @ FEMALE BAYONET END IT.17 (WAS -3), IT.19 (WAS -4,-5, & -6)	MRZ 3/18/92	DB 6/3/9 DK 6/3/9
ALL	E	ADDED -7 ASSEMBLY, ITEMS 21, & 22 (RELIEF FOR ESR VALVE BOX)	MRZ 12/11/92	K. Quinn 12/28/92 Kyle 12/11/

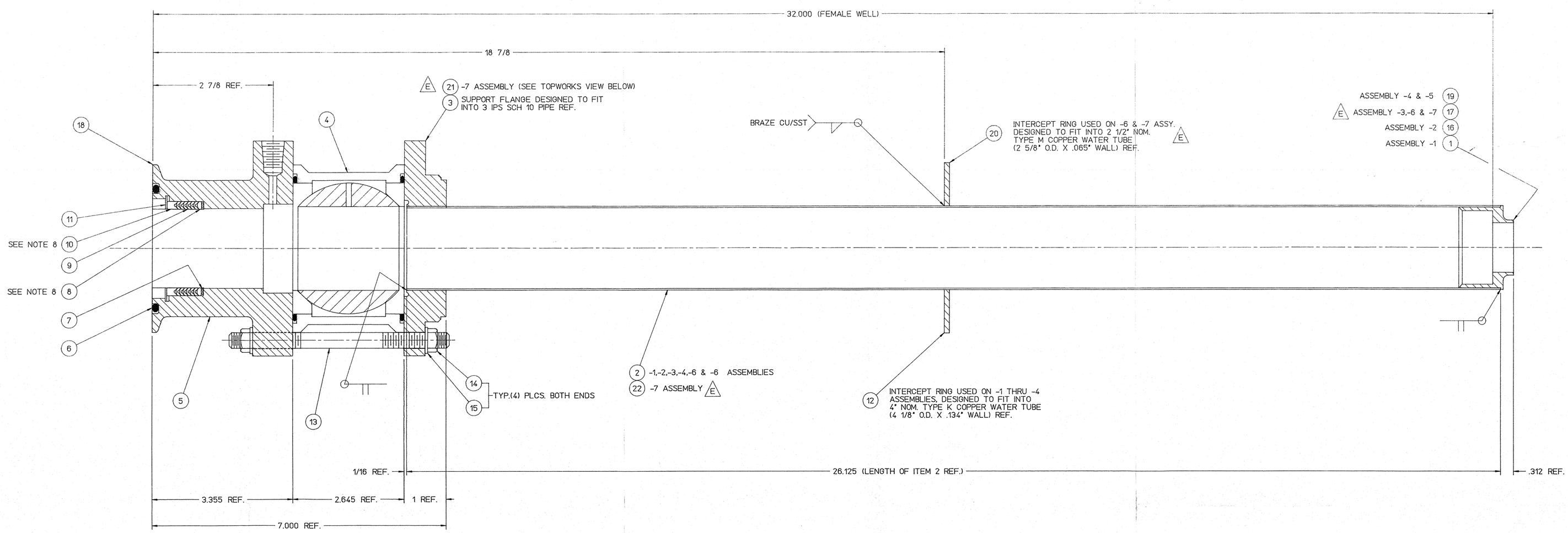

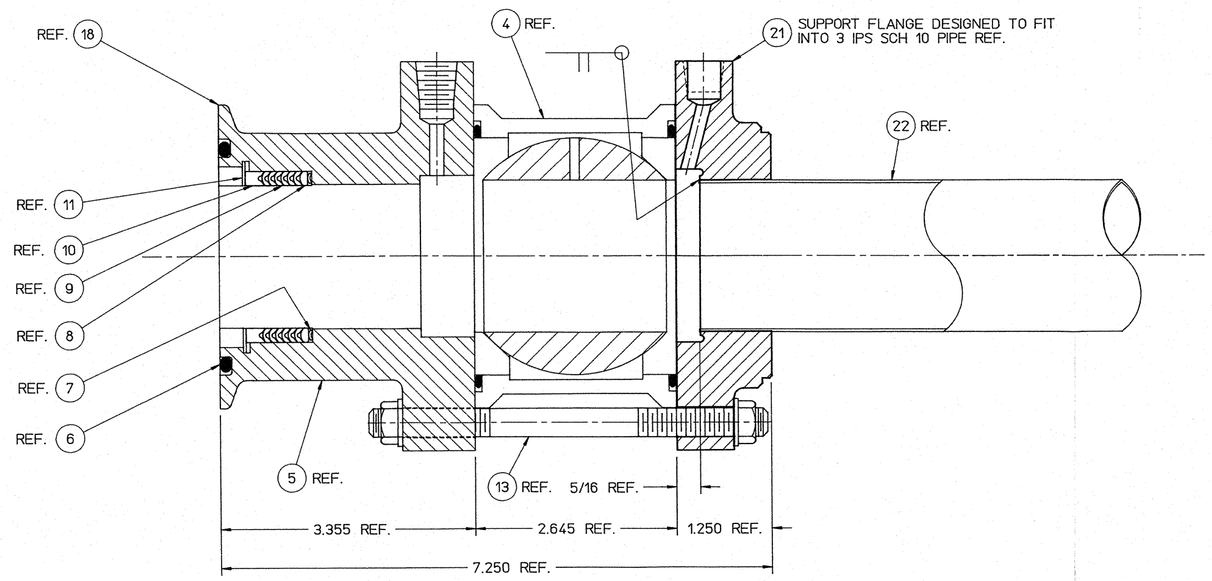

E TOPWORKS VIEW OF -7 ASSEMBLY

FOR ORIENTATION OF RELIEF PORT (IN ITEM 21) SEE NEXT ASSEMBLY

NOTES :

1. SEE DRAWING 75300-E-0029 FOR MALE BAYONET SUB-ASSEMBLY.
2. REMOVE BALL & MODIFY SIMILAR TO DWG. 75600-B-0096. REMOVE BODY & GASKET MATERIAL FROM FLANGES BEFORE BRAZING. SEE INSTALLATION DRAWING FOR HANDLE (NOT SHOWN) ORIENTATION.
3. ALL PARTS MUST BE CLEANED, FREE OF GREASE, OIL, OR ANY OTHER CONTAMINENTS PRIOR TO ASSEMBLY.
4. "HELIUM LEAK TEST" NO LEAK SHALL BE DETECTABLE ON THE MOST SENSITIVE SCALE OF A HELIUM LEAK DETECTOR WITH A MINIMUM SENSITIVITY OF 10^{-9} cc/sec.
5. INSTALL MALE BAYONET (75300-E-0029) WITH FEMALE BAYONET TO ASSURE PROPER ALLIGNMENT.
6. HALOGEN ITEMS REF. : HALOGEN INSULATOR & SEAL CORP.
   150 GAYLORD
   ELK GROVE, ILLINOIS 60007
   312-439-7400
7. SMALLEY RETAINING RINGS REF. : SMALLEY RETAINING RINGS
   333 ALICE STREET
   WHEELING, ILLINOIS
   312-537-7600
8. MALE & FEMALE STAINLESS STEEL ADAPTERS (ITEMS 8 & 10) MUST HAVE THEIR I.D. BORED OUT TO 1.915 DIAMETER FOR MALE BAYONET TO PASS THRU.

	QTY REQD -7 ASSY	QTY REQD -6 ASSY	QTY REQD -5 ASSY	QTY REQD -4 ASSY	QTY REQD -3 ASSY	QTY REQD -2 ASSY	QTY REQD -1 ASSY	ITEM NO.	PART OR IDENTIFYING NO.	NOMENCLATURE OR DESCRIPTION	MATERIAL SPECIFICATION	NOTES
E	1							22		TUBE, 2" O.D. x .035" W. x 25.875" LG.	ST.STL., TYPE 304	
E	1							21	75600-C-0328	2" VALVE SUPPORT FLG. w/ 1/4"NPT PORT	ST.STL., TYPE 304	
	1	1						20	75600-B-0307	HEAT INTERCEPT RING, 2 1/2" NOM.CU.TUBE	COPPER	
			1	1				19	75600-B-0297	FEMALE BAYONET END, 3/4 IPS	ST.STL.	
	1	1	1	1	1	1	1	18	VOSS #5322-H-400-L	V-RETAINER COUPLING	ST.STL.	
	1	1			1			17	75600-B-0177	FEMALE BAYONET END, 1 1/4 IPS	ST.STL.,TYPE 304	
						1		16	75600-B-0176	FEMALE BAYONET END, 1 IPS	ST.STL.,TYPE 304	
	8	8	8	8	8	8	8	15		WASHER, 3/8" NOM.	ST.STL.	
	8	8	8	8	8	8	8	14		HEX NUT, 3/8-16 NC	ST.STL.	
	4	4	4	4	4	4	4	13		ALL THREAD ROD, 3/8-16 NC x 5 1/4"LG.	ST.STL.	
				1	1	1	1	12	75600-B-0179	HEAT INTERCEPT RING, 4" NOM.CU.TUBE	COPPER	
	1	1	1	1	1	1	1	11	SMALLEY #WHM237-502	RETAINING RING, SPIRAL INTERNAL	ST.STL.	NOTE 7
	1	1	1	1	1	1	1	10	HALOGEN #46FSS	FEMALE ADAPTER,1.88 I.D.x 2.25 O.D.	ST.STL.	NOTES 6 & 8
	6	6	6	6	6	6	6	9	HALOGEN #G608V0683	V-RING, 1.88 I.D. x 2.25 O.D.	GLASS BLEND TF-8	NOTE 6
	1	1	1	1	1	1	1	8	HALOGEN #46MSS	MALE ADAPTER,1.88 I.D.x 2.25 O.D.	ST.STL.	NOTES 6 & 8
	1	1	1	1	1	1	1	7	HALOGEN STYLE 64	WAVE SPRING,FOR 1.88 I.D.x 2.25 O.D.	ST.STL.,TYPE 302	NOTE 6
	1	1	1	1	1	1	1	6	PARKER #2-334 OR EQ.	O-RING,.210"DIA.x 3.020"O.D.x 2.600 I.D.	VITON	
	1	1	1	1	1	1	1	5	75600-D-0175	FLANGE BODY	ST.STL.,TYPE 304	
	1	1	1	1	1	1	1	4	NIBCO #595-Y-66	BALL VALVE, 2" FULL PORT	BRASS	NOTE 2
		1	1	1	1	1	1	3	75600-B-0169	2" VALVE SUPPORT FLANGE	ST.STL.,TYPE 304	
		1	1	1	1	1	1	2		TUBE, 2" O.D. x .035"W.x 26.125"LG.	A-213, TYPE 304	
							1	1	75600-B-0178	FEMALE BAYONET END, 1 1/2 IPS	ST.STL.,TYPE 304	

PARTS LIST

E

DIM & TOL PER ANSI Y14.5
UNLESS OTHERWISE SPECIFIED DIMENSIONS ARE IN INCHES
TOLERANCES ARE:
FRACTIONS ± 1/32 DECIMAL XX. ± N/A .XXX ± .015 ANGLES ± N/A

MATERIAL: SEE PARTS LIST

FINISH: N/A UNLESS OTHERWISE NOTED

DEBURR & BREAK ALL SHARP EDGES

DO NOT SCALE DRAWING

CADD I.D. NO. /wbs1579/wbs_7/wbs_7_5/75600/E0028

APPROVALS	DATE
DRAWN MRZ/DAB	1/24/90
CHECKED R. BROWN	2/5/90
APPROVED D. KASHY	2/5/90
APPROVED D. KASHY	2/5/90

CEBAF
The Continuous Electron Beam Accelerator Facility
NEWPORT NEWS, VIRGINIA
UNITED STATES DEPARTMENT OF ENERGY

2" FEMALE BAYONET ASSEMBLY

SIZE E DWG. NO. 75300-E-0028 REV E

SCALE FULL USED ON ASSY NO. 75300-E-0001 SHEET 1 OF 1