Cerenkov Electronics

Brad Sawatzky
Mar 22, 2007

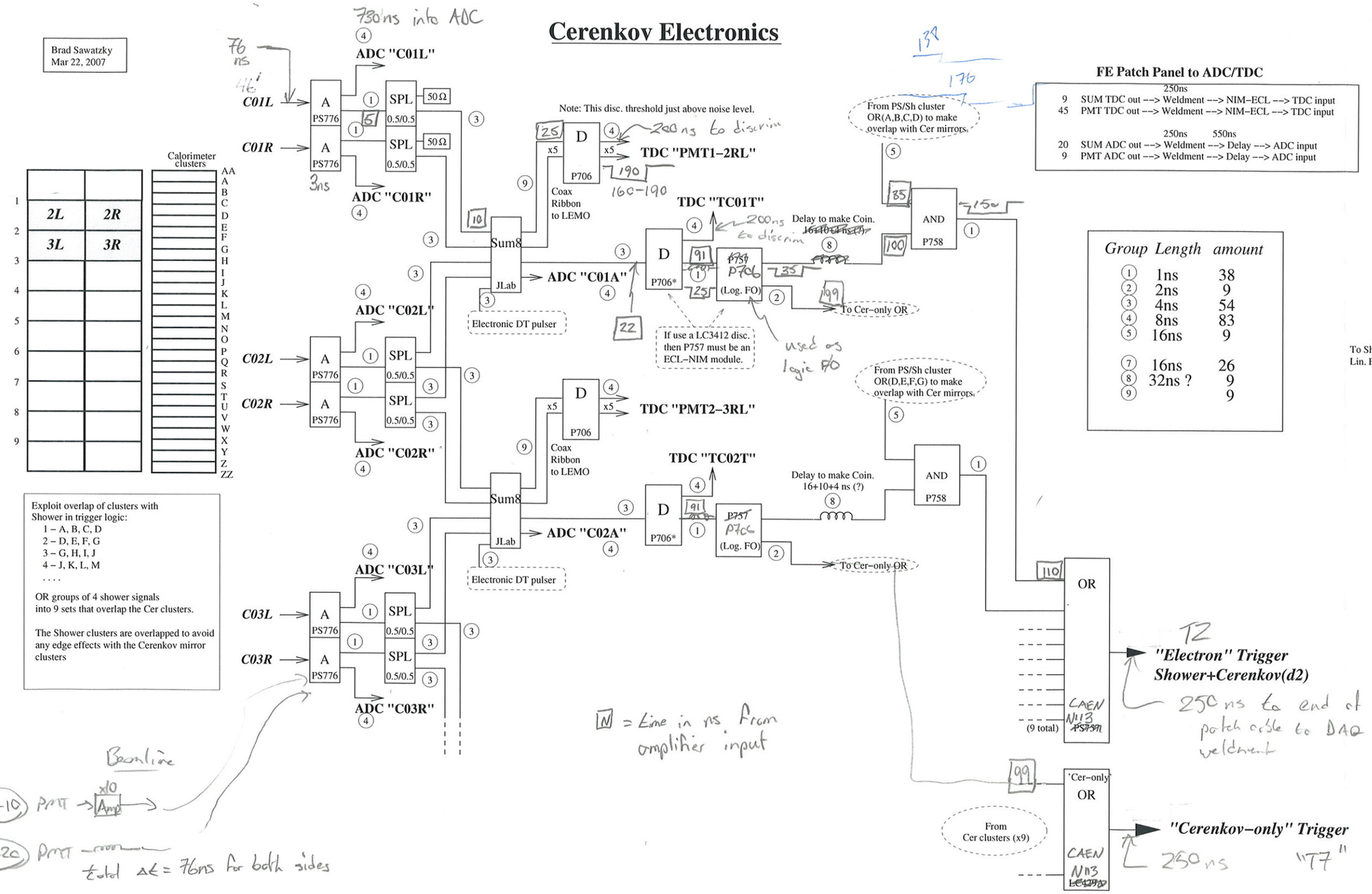

Exploit overlap of clusters with Shower in trigger logic:
1 – A, B, C, D
2 – D, E, F, G
3 – G, H, I, J
4 – J, K, L, M
. . . .

OR groups of 4 shower signals into 9 sets that overlap the Cer clusters.

The Shower clusters are overlapped to avoid any edge effects with the Cerenkov mirror clusters

FE Patch Panel to ADC/TDC

250ns
9 SUM TDC out --> Weldment --> NIM–ECL --> TDC input
45 PMT TDC out --> Weldment --> NIM–ECL --> TDC input

250ns 550ns
20 SUM ADC out --> Weldment --> Delay --> ADC input
9 PMT ADC out --> Weldment --> Delay --> ADC input

Group	Length	amount
1	1ns	38
2	2ns	9
3	4ns	54
4	8ns	83
5	16ns	9
7	16ns	26
8	32ns ?	9
9		9

FE NIM module layout

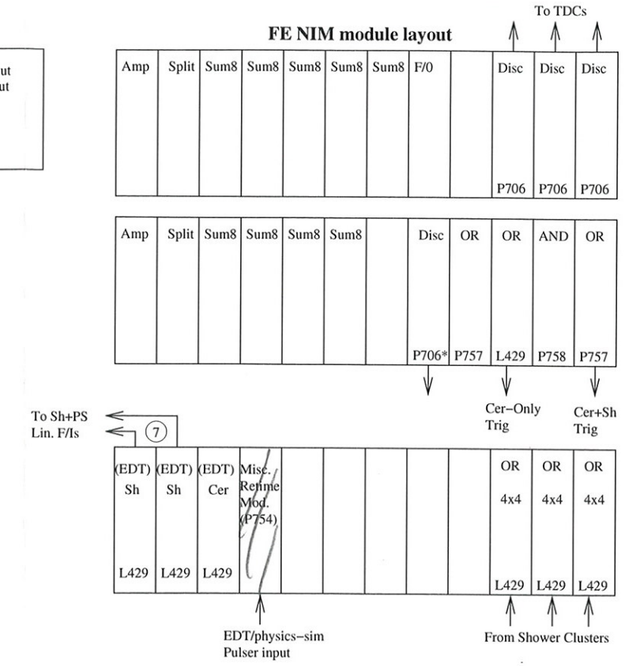

		chan	modules
Amp	PS776	20	2
Sum8	JLab	9x5	9
Discr	P706*	9	1
OR	PS757	9x2	2
AND	PS758	9	1
Splitter (50:50)		20	2
F/I	LC429A	9	1
F/O	LC429A	9	1
Discr	P706	45	3
F/I Sh cluster F/I	LC429A	4x9	3